Industrial shaft seals

Unit conversions

Quantity	Unit	Conversion			
Length	1 mm	inch	0.039 in	1 in	25,40 mm
	1 m	foot	3.281 ft	1 ft	0,3048 m
	1 m	yard	1.094 yd	1 yd	0,9144 m
	1 km	mile	0.6214 mile	1 mile	1,609 km
Velocity, speed	1 m/s	foot per second	3.28 ft/s	1 ft/s	0,30480 m/s
	1 m/s	foot per minute	196.8504 ft/min	1 ft/min	0,00508 m/s
	1 km/h	mile per hour	0.6214 mile/h (mph)	1 mile/h (mph)	1,609 km/h
Force	1 N	pound-force	0.225 lbf	1 lbf	4,4482 N
Pressure, stress	1 MPa	pounds per square inch	145 psi	1 psi	$6{,}8948 \times 10^3$ Pa
Temperature	Celsius	° (degree)	$t_C = 0{,}555\ (t_F - 32)$	Fahrenheit	$t_F = 1{,}8\ t_C + 32$

self-adhesive transparent business card pocket
measurements tbd

SKF mobile app

SKF Seal Select is an online seal and accessory selection tool. Through several different input parameters you can easily find a suitable SKF sealing solution for a specific application. SKF Seal Select currently offers a selection tool for:

- SKF Speedi-Sleeve
- V-ring seals
- Radial shaft seals

Apple App Store

This catalogue as PDF

To download a PDF document of this catalogue and for information about important updates, go to **skf.com/go/18729**. Please note product data in this printed catalogue was accurate on the day of printing. The latest and most accurate product data is always available for you on skf.com.

Catalogue as PDF

SKF online

Visit the official Website **skf.com** or for discussion the forum and blog on **http://industrialsealsexpert.skf.com/**

Website

Forum and Blog

Find a distributor or a SKF facility online

1 Fill in your city, state and / or postal zip code below to find an SKF distributor near you
2 You can filter your search further by using the drop-down choices on the right, please select Power Transmission Seals!
3 Your results will show on the bottom right If you prefer to search by list, go to Find a distributor by list.

Find a distributor

Find SKF

Contents

Foreword

This edition of the Industrial shaft seals catalogue supersedes the one published in June 2013 (publication number 10919/2). For this new edition, numerous revisions, additions and enhancements have been made to provide an even more comprehensive guide. Though the aim of this catalogue is to cover a very wide seal assortment, it still only includes a selection of our complete assortment of shaft seals and accessories.

The data in this catalogue may differ from that provided in earlier catalogues because of redesign, technological developments or revised methods of calculation. SKF reserves the right to make continuing improvements to SKF products without prior notice with respect to materials, design and manufacturing methods, as well as changes necessitated by technological developments.

Catalogue overview

In order to emphasize the importance of studying the operating conditions of each application before selecting a sealing solution, this catalogue outlines the most important factors to consider. These are provided in the chapter Product data – general, along with basic shaft and housing bore requirements.

SKF industrial shaft seals and accessories are divided into three main groups:

- Radial shaft seals
- Axial shaft seals and
- Wear sleeves.

Different seal types within these groups are described with their respective design, materials and applications.

Product descriptions are followed by product tables. It should be noted, however, that these tables only cover a selection of available sizes.

CR Seals®

Founded in 1878 as Chicago Rawhide, CR Seals has one of the longest histories in the seal industry. For the last 110 years, CR Seals has been setting performance and service life standards for industrial shaft seals.

CR Seals has also been part of SKF since 1990, a span during which we've developed new materials, manufacturing processes and designs to create some of the most robust seals on the market.

!

Contact
Always contact your SKF sales representative for complete and updated availability information.

The SKF Interactive Engineering Catalogue
SKF provides this catalogue in electronic format, the SKF Interactive Engineering Catalogue, online at www.skf.com.

Units
The units in this catalogue are in accordance with ISO (International Organization for Standardization) standard 1000:1992, and SI (Système International d'Unités).

SKF industrial shaft seals and accessories

A
Radial shaft seals

- Seals for general industrial applications
- Seals for heavy industrial applications
- Cassette seals

B
Wear sleeves

- SKF Speedi-Sleeve
- Wear sleeves for heavy industrial applications (LDSLV)

C
Axial shaft seals

- Track pin seals
- Metal face seals
- V-ring seals
- Axial clamp seals

Catalogue overview

Important product updates

HSS

HSS seals constitute a range of seals with a variety of design features and combinations of these, including solid and split versions, SKF Springlock, SKF Springcover, different spring connections and lubrications grooves.

The flexible manufacturing process enables the customization of sizes without minimum quantity and virtually without upper limits for both metric and inch sizes. This flexibility enables the same short delivery times for customized dimensions as for standard seals.

HRS

HRS seals are machined seals and specially designed to cope with the harsh conditions of main shafts. They offer lubricant retention and contamination exclusion to reduce the risks of lubrication or contaminant-related bearing failures and their consequences, such as production downtime and repair costs. HRS seals are made of G-ECOPUR, a polyurethane with excellent abrasion resistance and tear strength.

MUD11

SKF Mudblock seal design MUD11 is a new generation of cassette seals, specifically developed for oil-lubricated heavy-duty applications in harsh environments and tough operating conditions.

SKF Mudblock new generation seals last up to 50% longer and operate with up to 20% less friction than the competitor's seal. Yet SKF Mudblock seals also offer superior oil retention and contamination exclusion in the harshest, most contaminated conditions.

TPM

SKF Trackstar seal TPM is a new solution for track pin seals, formed with a polyurethane sealing lip, a rubber energizer and a metallic part for increased robustness. It has an increased seal life time and subsequent track life, as well as a positive impact on maintenance cost reduction.

The seal has also been engineered with an integrated mounting lip feature in the rubber element, enabling easy and safe mounting, as well as making it suitable for robotized mounting.

How to use

This catalogue is divided into four main parts:

Product data – general
A Radial shaft seals
B Wear sleeves
C Axial shaft seals

Please see paragraph *Catalogue overview* on **page 10** and **11.**

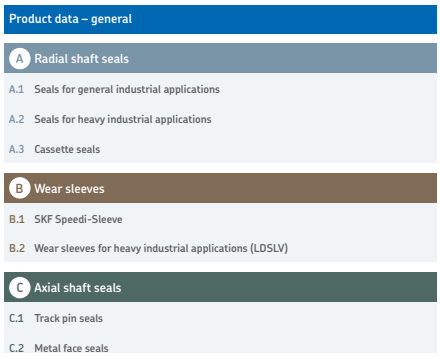

Principles of seal selection

Selecting an appropriate seal design and material depends on the operating conditions of the application. Because the influence of one operating condition typically dominates the seal selection process, there are no universal rules for determining the appropriate seal type or design for a given application. **Pages 103** to **105** and **174** to **183** show the standard SKF radial shaft seals and their main features and permissible operating conditions

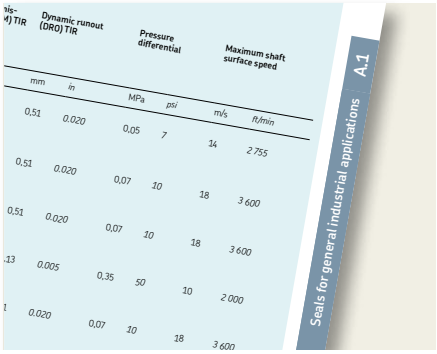

Product register and index

The product register and index are marked with colored bars on the right edge of the page. The product index lists series designations, relates them to the seal type, and guides you to the relevant product section and product table. The text index lists entries in alphabetical order, including designation sufixes, and helps you locate information quickly (**page 407**).

US Designation index

The catalogue contains a numerical size listing of US seal designations to identify our seal assortment fast and easy. The numerical listing include designation, seal design, material and dimensions. On the top corner you will find a overview line with the first and last designation on the page.

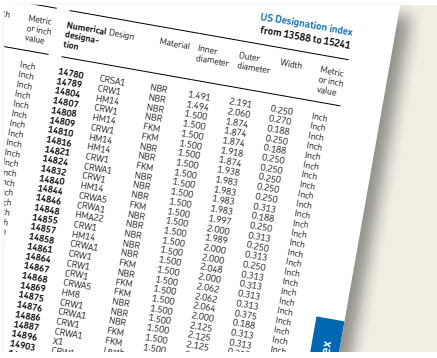

Product data – general

Industrial shaft seals

Industrial shaft seals are used to seal the opening between a rotating and a stationary component, or between two components in relative motion. Primary seal functions include:

- **Retain the lubricant**
- **Exclude contaminants**
- **Separate two different media**
- **Seal under pressure**

To be effective, industrial shaft seals should operate with a minimum of friction and wear, even under unfavourable operating conditions. In order to meet the requirements of a variety of different applications and operating conditions, SKF industrial shaft seals for rotating machine components are manufactured from many different designs, materials and executions. Each of these designs and material combinations has specific properties, making them suitable for a particular application. The main groups of shaft seals and accessories are:

Radial shaft seals
- Seals for general industrial applications
- Seals for heavy industrial applications
- Cassette seals

Axial shaft seals
- Track pin seals
- Metal face seals
- V-ring seals
- Axial clamp seals

Wear sleeves
- SKF Speedi-Sleeve
- Wear sleeves for heavy industrial applications

Availability
The SKF assortment of industrial shaft seals comprises hundreds of different designs and material combinations. The products shown in this catalogue and listed in the product tables are the more commonly used seal types and sizes.

Guidance values
Since several factors simultaneously affect the sealing system and seal performance, all stated values in graphs and tables in this publication should be considered as guidelines only and not as absolute values for practical applications.

Profile overview selection

Radial shaft seals

Seals for general industrial applications, elastomeric sealing lip(s)


HMS5


HMSA10


CRS1


CRSA1


CRSH1


CRSHA1


CRW1


CRWH1


CRWA1


CRWHA1


CRW5


CRWA5


HDW1


HM14


TL7


X15

Seals for general industrial applications, PTFE sealing lip(s)


SL


SLA


SLX


SLS


DL


DLA


YSLE


YNSLE


YSL

Seals for heavy industrial applications, flex


HDS1


HDS2


HDS7


HDSA1


HDSA2


HDSF2


HDSF7


HDSH2


HDSH7


HDSD2


HDSE2


HS4


HS5


HS6


HS7


HS8


HSS4


HSS5


HSS6


HSS8


HRS


HRSA


HRE

Seals for heavy industrial applications, high speed


HDL


HDLA

Cassette seals, SKF Mudblock


MUD3


MUD6


MUD7


MUD8


MUD11

Wear sleeves

SKF Speedi-Sleeve

LDSLV4

Axial shaft seals

Track pin seals, SKF Trackstar

TP

TPM

Metal face seals

HDDF

V-ring seals

VA / VR1

VS / VR2

VL / VR3

VE / VR4

VRME / VR6

Axial clamp seals

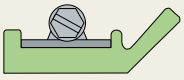

CT1

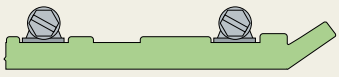

CT4

Selection of seal design and material

Fig. 1

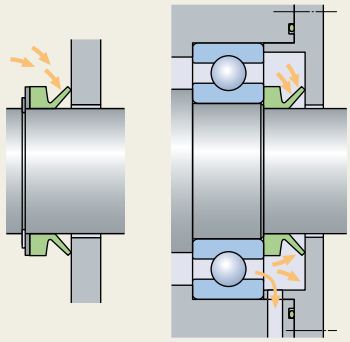

V-ring

Fig. 2

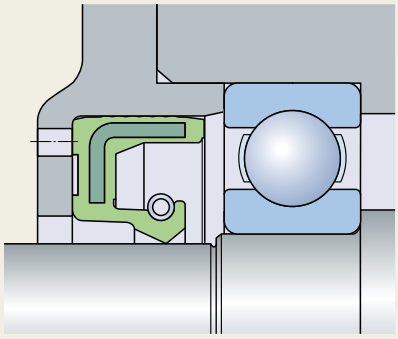

HMS5 seal

Fig. 3

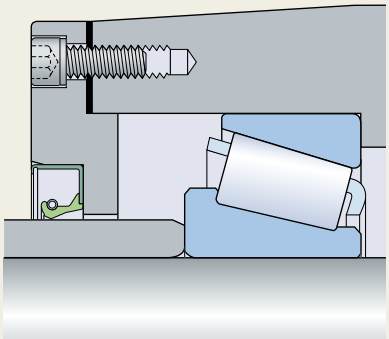

CRW1 seal

Selecting an appropriate seal design and material depends on the operating conditions of the application such as:

- **Temperature**
- **Speed**
- **Pressure differential**
- **Type of lubricant**
- **Vertical or horizontal orientation**
- **Runout and shaft-to-bore misalignment**

Because the influence of one operating condition typically dominates the seal selection process, there are no universal rules for determining the appropriate seal type or design for a given application. This section describes how operating conditions affect seal performance and service life and provides guidance on selecting the most appropriate seal for a given application.

Pages 103 to **105** and **174** to **183** show the standard SKF radial shaft seals and their main features and permissible operating conditions.

Grease retention

Greases have a relatively high viscosity and are relatively easy to retain in a bearing arrangement. In many grease lubricated applications, a non-spring-loaded sealing lip design or a V-ring can adequately retain the grease (→ **fig. 1**).

However, more demanding applications may require HMS5 or CRW1 spring-loaded radial shaft seals (→ **figs. 2 and 3**).

When frequent relubrication is required, the lip of at least one of the seals in the sealing arrangement should be directed toward the air side so that excess grease can escape via the sealing lip (→ **fig. 3**). This avoids grease build-up, which can retain heat and limit heat dissipation. For grease lubricated applications, SKF recommends calculating the permissible circumferential speed for oil and halving the result.

Fig. 4

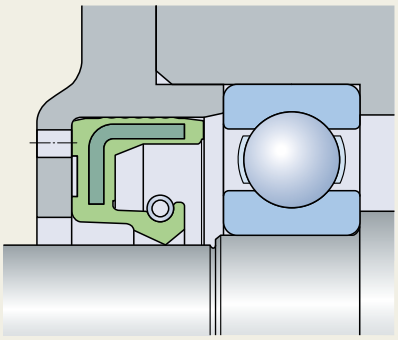

HMS5 seal

Fig. 5

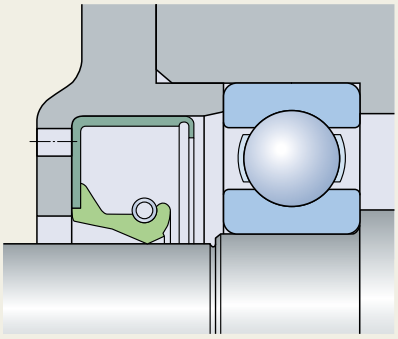

CRW1 seal

Oil retention

Lubricating oils, particularly relatively low-viscosity oils, are much more difficult to retain than greases. Therefore, HMS5 or CRW1 spring-loaded radial shaft seals (→ **figs. 4** and **5**) are recommended in order to achieve the necessary radial load and resistance to dynamic runout and shaft-to-bore misalignment for a satisfactory sealing performance.

Standard HMS5 seals have a straight lip while CRW1 seals are designed with SKF Wave lips to provide improved pumping ability, regardless of the direction of shaft rotation (→ **fig. 5** on **page 21**). Another way of increasing a seal's pumping ability is to add a helix pattern, i.e. hydrodynamic features, to the sealing lip design.

The rubber outside diameter, like the one found on HMS5 seals, helps compensate for small imperfections in the housing bore surface and is therefore recommended when the required housing bore surface is questionable.

For very tough operating conditions, where circumferential speeds are relatively low, metal face seals, like the HDDF seal (→ **fig. 6**), can be used for both oil or grease retention.

V-rings (→ **fig. 7**) may also be used to retain oil, provided they are installed on the oil side and supported axially on the shaft.

Fig. 6

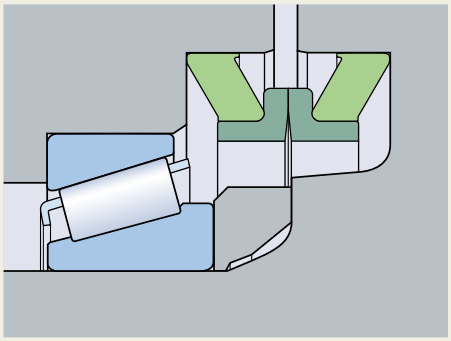

HDDF metal face seal

Fig. 7

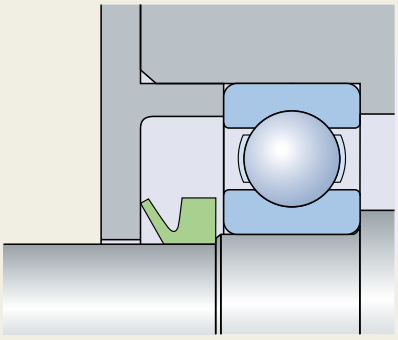

V-ring

Fig. 8

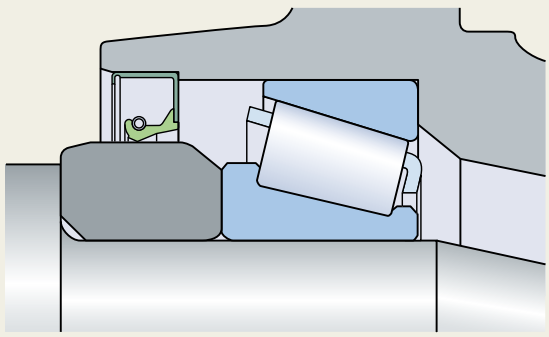

CRW1 seal

Fig. 9

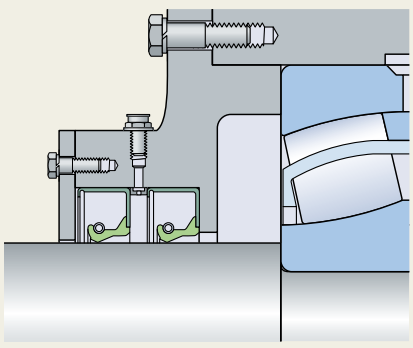

CRW1 seals in tandem

Contaminant exclusion

Radial shaft seals that are primarily used for contaminant exclusion should be installed with the lip pointing outward. When additional protection is needed, SKF recommends a seal design that incorporates an auxiliary lip, for example the HMSA10 or CRWA1 seals.

For tough operating conditions, SKF Wave seals (→ **fig. 8**) with hydrodynamic features are recommended. To further enhance sealing efficiency, two single-lip seals can be arranged in tandem (→ **fig. 9**) or a double-lip seal, like the HDSE1 seal, can be used (→ **fig. 10**).

V-rings (→ **fig. 11**) are used primarily to exclude contaminants. These seals, which act as flingers, rotate with the shaft and seal against a surface that is perpendicular to the shaft.

V-rings and axial clamp seals are often used as secondary seals to protect the primary seals from coarse contaminants.

V-ring seal arrangements are not intended for oil retention.

Fig. 10

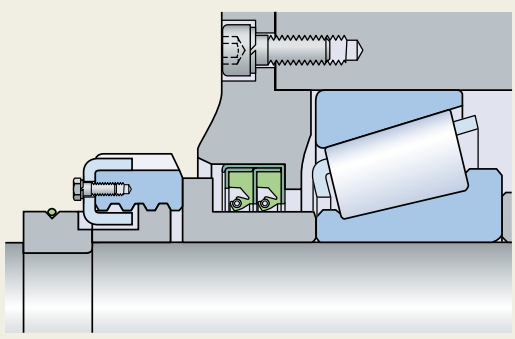

HDSE1 seal

Fig. 11

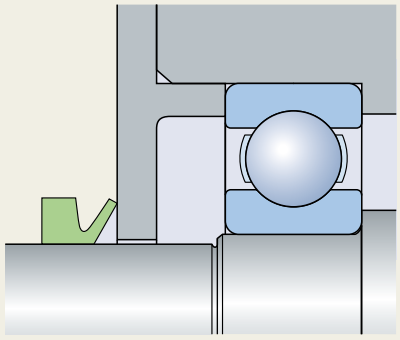

V-ring

Fig. 12

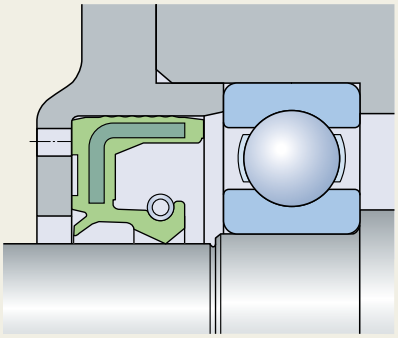

HMSA10 seal

Retention and exclusion

In many applications, the exclusion of contaminants is just as important as lubricant retention. Seals with an auxiliary lip, like the HMSA10 seals (→ **fig. 12**), are appropriate for these applications.

Another option is to use two seals installed in opposite directions (→ **figs. 13** and **14**) or two opposing V-rings (→ **fig. 15**) with a spacing washer.

Under extremely tough operating conditions, SKF recommends using HDDF metal face seals (→ **fig. 6** on **page 23**), provided that the sliding velocity of the mating surfaces lies within the permissible range.

Fig. 13

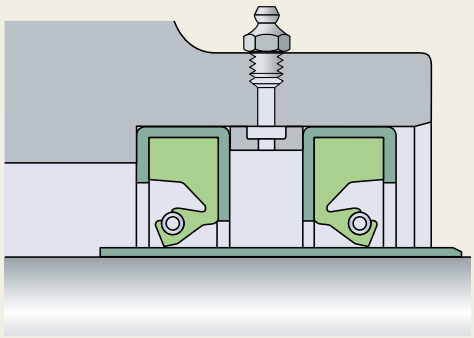

Two seals in opposite direction

Fig. 14

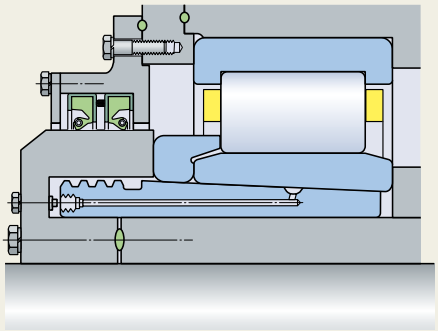

Two seals in opposite direction

Fig. 15

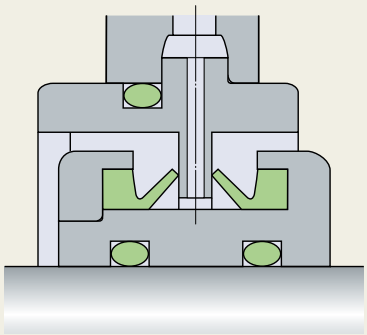

V-ring

Fig. 16

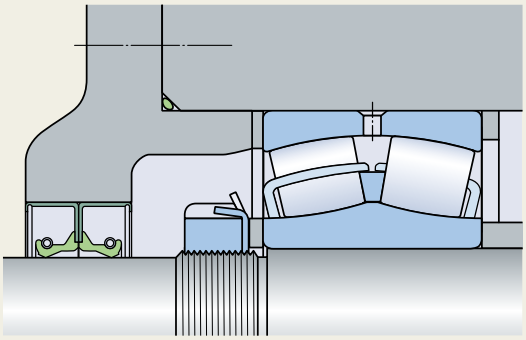

CRW1 seals

Fig. 17

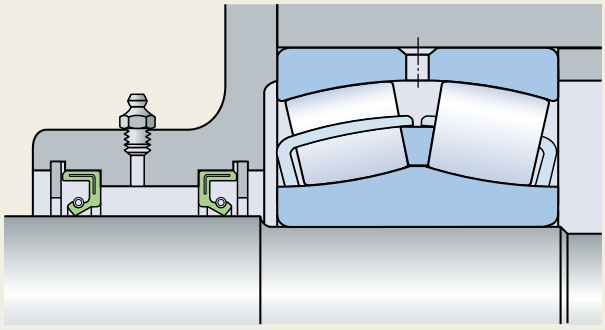

HMS5 seals

Fig. 18

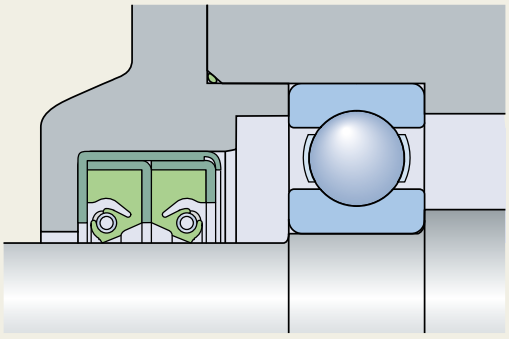

HDSD2 seal

Separating two liquids

When an application has to keep two liquids from coming into contact with each other, there are two suitable solutions. These solutions, which depend on the availability of space and required efficiency, include

- the use of two separate seals (→ **figs. 16** and **17**), positioned with their lips facing in opposite directions or
- the use of HDSD2 double-lip seals (→ **fig. 18**)

In both alternatives, the sealing lips must be spring-loaded. When using an HDSD seal, it is very important to provide a means to lubricate the sealing lips, i.e. the cavity between the sealing lips must be filled with grease prior to installation.

Circumferential and rotational speed

The permissible speed of a seal is determined by its design and sealing lip material as well as the material and condition of the shaft. All of these factors influence the heat generation at the seal counterface. Lubrication of the sealing lip and the characteristics of the lubricant also have a direct influence on heat generation because they have a direct impact on heat dissipation.

Diagram 1 compares the permissible circumferential speeds for various seal designs assuming normal seal operation, grease or oil retention and no pressure differential across the seal.

Diagram 1

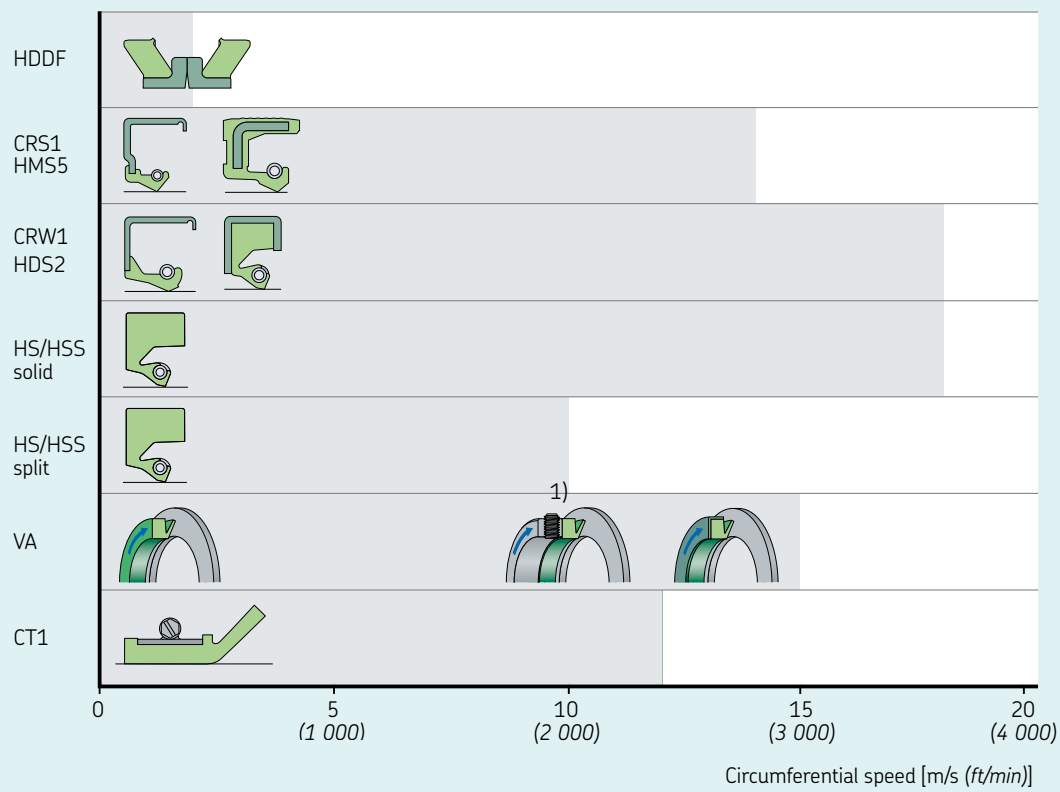

1) Support ring by customer

Fig. 19

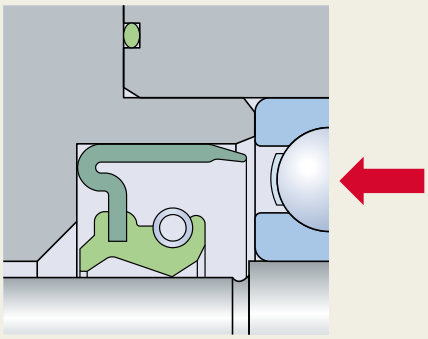

CRWA5 seal

Pressure differentials

When subjected to a pressure differential, the seal must resist the additional radial load generated by the pressure. If the seal is not designed to resist the pressure, it will be forced against the shaft, increasing the radial load, underlip temperature, friction and wear of the seal and the counterface, resulting in shortened service life.

Standard seals are rated for no more than 0,07 MPa at 5 m/s *(10 psi at 1 000 ft/min)*, but SKF offers CRW5 and CRWA5 pressure profile seals that can accommodate 0,34 MPa at 5 m/s *(50 psi at 1 000 ft/min)*. Beyond 0,34 MPa *(50 psi)*, SKF offers a line of special order PTFE seals that can accommodate more than 3,5 MPa *(500 psi)*.

In applications with pressure differentials, shaft seals should be secured axially from the low-pressure side to prevent them from moving axially. This can be accomplished by installing the seal into a counterbore (→ **fig. 19**) or by using a retaining ring.

Fig. 20

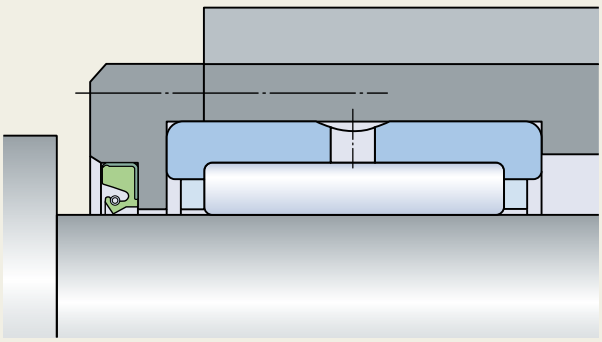

Special seal design

Limited space

In many cases, the available space is insufficient for a radial shaft seal having dimensions in accordance with ISO 6194-1 or DIN 3670. In these situations, special radial shaft seal designs must be used (→ **fig. 20**).

V-rings (→ **fig. 21**) are also suitable for applications with limited space because they can be positioned outside the actual seal position. V-rings seal axially by exerting light pressure against the counterface that can be a stationary or rotating machine component.

In applications with large shaft diameters, HS8 seals are an appropriate choice when space is limited (→ **fig. 22**).

Fig. 21

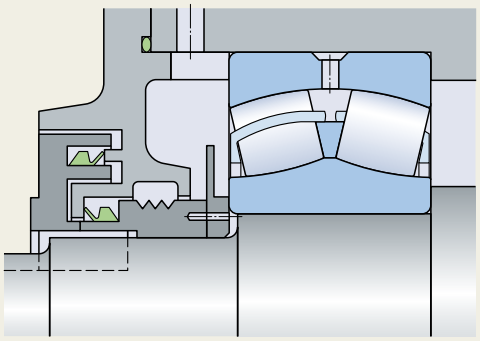

V-ring seal

Fig. 22

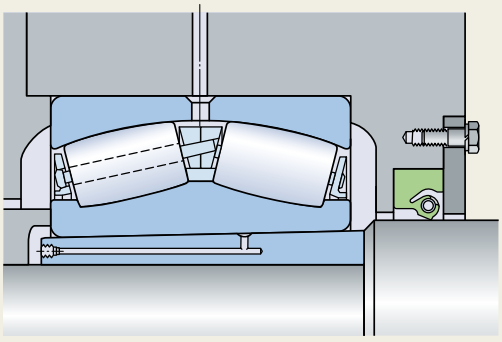

HS8 seal

Fig. 23

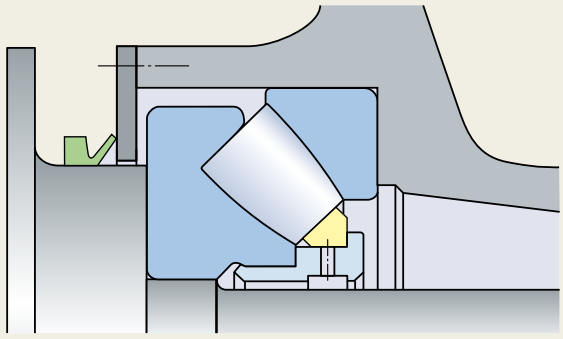

V-ring seal

Fig. 24

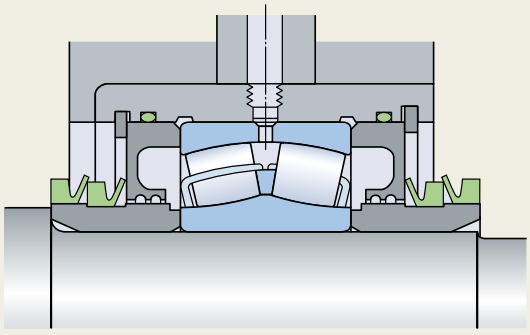

V-ring seals

Installation restrictions

In applications where the seal cannot be installed via the shaft end, a V-ring or any of the split HS, HSS or HRS designs can be used (→ **pages 192** to **199**).

After being positioned on the shaft, HS, HSS and HRS seals are held together by a spring and spring connector. These seals should be retained axially in the housing bore by a one-piece or split cover plate.

Split HS radial shaft seals are suitable for circumferential speeds up to 7,5 or 10 m/s *(1 480 or 1 970 ft/min)*, depending on their design, and are available for shaft diameters up to approximately 4 570 mm *(180 in)*.

Since V-rings are elastic, they can be stretched and are therefore easy to install, even in applications where they have to be passed over other components (→ **fig. 23**). However, in the event that replacing a V-ring would require the time consuming removal of several components, it is advantageous to install one or two replacement V-rings on the shaft from the outset (→ **fig. 24**). When the time comes to replace a worn V-ring, it can be cut and removed and the replacement V-ring can be pushed into position.

Fig. 25

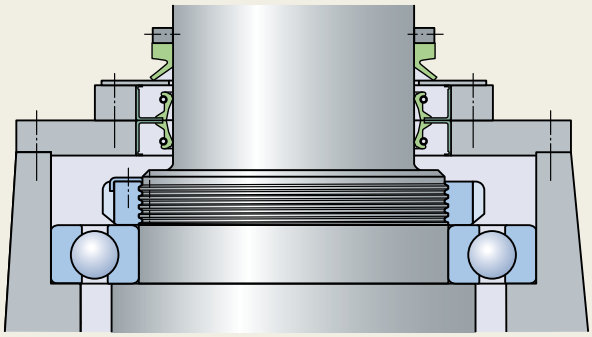

V-ring seal

Arrangement

Seals installed on vertical shafts are usually more exposed to contaminants like rain water than seals on horizontal shafts. Oil retention is also more challenging for seals installed on vertical shafts. In general, however, all seals listed in the product tables are suitable for use on both horizontal and vertical shafts.

V-rings (→ **figs. 25** and **26**) have an interference fit on the shaft and rotate with it. They act as flingers and are therefore particularly suitable as both primary and secondary seals on vertical shafts. Highly efficient sealing arrangements, like those found in submersible pumps, can be achieved using radial shaft seals in tandem with a V-ring for additional protection against contaminants (→ **fig. 27**).

At relatively low speeds, HDDF metal face seals (→ **fig. 28**) effectively retain grease or oil and prevent the ingress of contaminants on vertical shafts.

Fig. 26

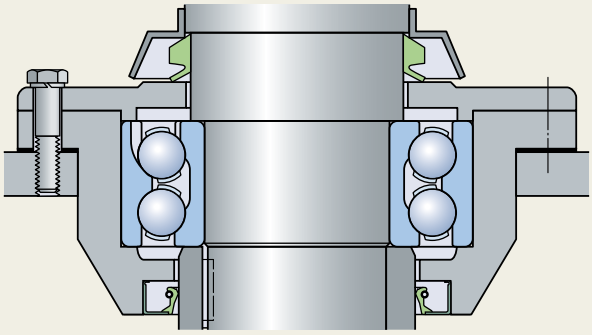

V-ring seal

Fig. 27

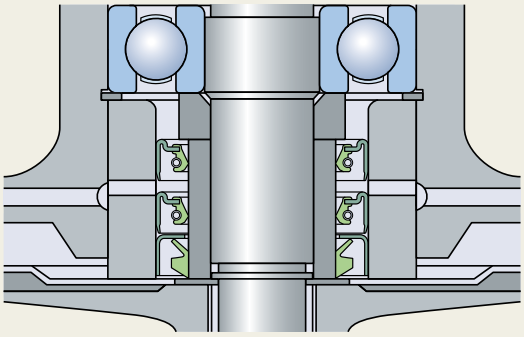

CRW5 seals + V-ring seal

Fig. 28

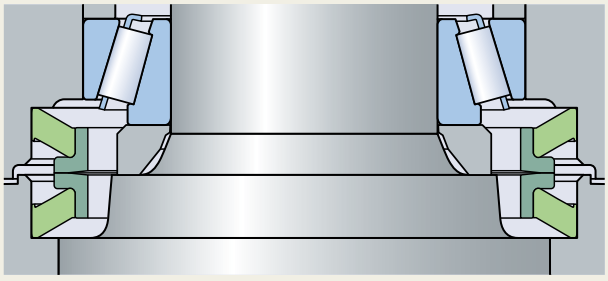

HDDF metal face seal

Counterface design

The service life and performance of a seal are largely influenced by:

- Shaft material and hardness
- Shaft surface finish and tolerance grade
- Dynamic runout and shaft-to-bore misalignment

A shaft surface that is too smooth can lead to lubricant starvation, while a shaft surface that is too rough can accelerate sealing lip wear. The shaft surface should be machined without directionality as directionality can cause leakage depending on the direction of rotation. Dynamic runout and shaft-to-bore misalignment cause an uneven radial load on the circumference of the sealing lip. As a result, the sealing lip, particularly at high speeds, will not be able to follow the shaft. This, in turn, will result in a gap between the sealing lip and the shaft, causing reduced sealing ability.

Unlike radial shaft seals, V-rings and axial clamp seals are not affected by normal coaxiality deviations or runout.

Axial movement

Axial movement of the shaft relative to the housing bore does not detract from the sealing ability of radial shaft seals (→ **fig. 29**), provided that the total surface in contact with the lip has the same quality with respect to hardness and surface finish.

The amount of axial movement that can be accommodated by V-rings, axial clamp seals and HDDF seals is limited by the permissible displacement of the seal relative to its counterface.

Fig. 29

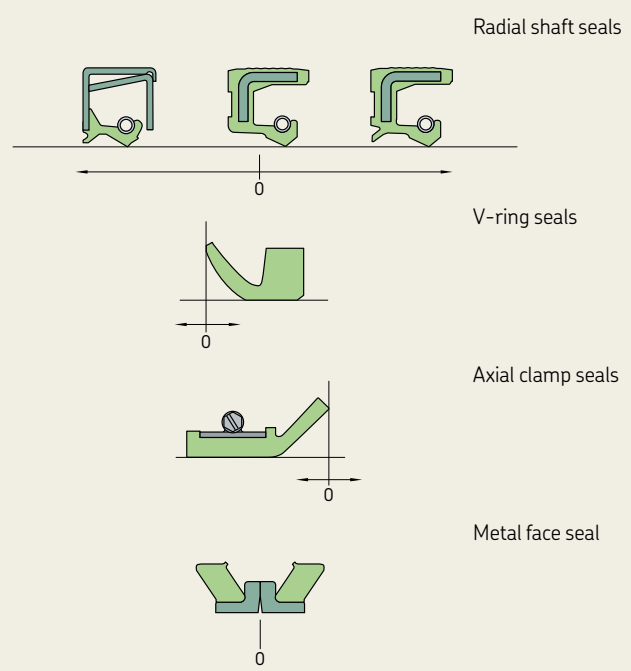

Axial movement

Sealing materials

Cases and inserts

Metal cases and reinforcements for SKF radial shaft seals are manufactured standard from deep-drawn carbon sheet steel. The exposed surfaces are treated to protect them from corrosion during normal handling and storage.

SKF radial shaft seals that will be used in corrosive environments can also be designed with a stainless steel case on request.

Garter springs

The garter springs on SKF radial shaft seals are manufactured standard from cold-drawn steel wire. Exceptions are the metal-cased HDS seals, the all-rubber HS seals and the HMS5 / HMSA10 seals made from fluoro rubber that are designed with stainless steel garter springs.

SKF Bore Tite Coating

SKF Bore Tite Coating is a water-based acrylic sealant available on most SKF metal-cased seals. The sealant is used as a coating on the outside diameter of the seal. SKF Bore Tite Coating is pliable with a thickness of 0,03 to 0,07 mm *(0.0012 to 0.0028 in)* to compensate for small imperfections in the housing bore surface. The general guideline in Rubber Manufacturers Association (RMA) is, that if the bore surface texture is greater than 2,5 µm *(100 µin)* R_a, a sealant should be used. This sealant can be used at temperatures up to 200 °C *(390 °F)* and is compatible with most oils, greases, aqueous acids and alkalis, alcohols and glycols. Please note that SKF Bore Tite Coating is not compatible with aromatics, ketones or esters. Contact with these substances will, however, have little or no effect if wiped off quickly.

Adhesives and bonding agents

Adhesives and bonding agents are used to achieve static sealing ability and satisfactory bonding between metal and elastomers in seal designs. Both of them can be solvent or water based depending on the metal and elastomer to be bonded.

Sealing lip materials

In addition to its design, the material of a sealing lip can have a significant impact on sealing performance and reliability. SKF, therefore, manufactures seals using a variety of sealing lip materials to meet the needs of different applications.

The sealing lips of SKF seals are generally made of elastomer materials. However, thermoplastics like polytetrafluoroethylene (PTFE) are gaining in importance. PTFE is mainly used for special seals intended for particular applications where improved thermal or chemical resistance is demanded.

SKF industrial shaft seals are generally manufactured from the materials listed in **table 1** on **page 32**. These materials have characteristics that make them particularly suitable for specific applications.

By changing the actual formulation and blending, it is possible to modify the characteristics of the elastomers relative to:

- Resistance to swelling
- Elasticity
- Chemical resistance
- Thermal resistance
- Behaviour in the cold
- Gas permeability

Details about the chemical resistance of sealing lip materials to various media encountered in operation are provided in the section *Chemical resistance*, **page 37**.

A code is used to identify the sealing lip material of SKF seals (→ **table 1** on **page 32**). The code also appears in the designations of metric radial shaft seals. For seals manufactured from a combination of materials, a combination of code letters is used, like RD (nitrile rubber and SKF Duralip).

Nitrile rubber (R)

The term nitrile rubber is used in this publication for acrylonitrile-butadiene rubber (NBR). This material has very good engineering properties and is a general-purpose sealing lip material. It is a copolymer manufactured from acrylonitrile and butadiene that provides good resistance to the following media:

- Most mineral oils and greases with a mineral oil base
- Normal fuels like gasoline, diesel and light heating oils
- Animal and vegetable oils, fats and hot water

Nitrile rubber also tolerates short-term dry running of the sealing lip. The permissible operating temperature range of nitrile rubber is –40 to +100 °C *(–40 to +210 °F)*. For brief periods, temperatures of up to 120 °C *(250 °F)* can be tolerated.

SKF also offers a special nitrile rubber compound with a temperature range between –55 and +110 °C *(–65 and +230 °F)*.

SKF Duralip (D)

SKF Duralip is a carboxylated nitrile rubber (XNBR) developed by SKF that combines the good technical properties of nitrile rubber with an increased resistance to wear (→ **diagram 2** on **page 34**). It is mainly used for seals for heavy industrial applications. Seals made of this material should be chosen when abrasive contaminants like sand, soil and scale could reach the seal counterface on the shaft.

SKF Duratemp (H)

SKF Duratemp is a hydrogenated nitrile rubber (HNBR) developed by SKF that combines the wear resistance of SKF Duralip with increased high-temperature resistance (→ **diagram 3** on **page 35**). SKF Duratemp is also more resistant to chemical attack, weather, ageing and ozone. However, mixtures of oil in air may have a negative effect. The upper operating temperature limit is 150 °C *(300 °F)*, which is significantly higher than that of ordinary nitrile rubber. SKF Duratemp is mainly used for seals for heavy industrial applications or where extended service life is required.

Table 1

SKF sealing lip materials

Composition of basic material	**Designation according to** SKF	ISO 1629 ISO 1043-1 DIN 7728 Part 1	ASTM[1] D1418 ASTM D1600
Acrylonitrile-butadiene rubber (nitrile rubber)	R, RG	NBR	NBR
Hydrogenated acrylonitrile-butadiene rubber (SKF Duratemp)	H	HNBR	HNBR
Carboxylated nitrile rubber (SKF Duralip)	D	XNBR	XNBR
Polyacrylate elastomer	P	ACM	ACM
Silicone rubber	S	MVQ	VMQ
Fluoro rubber (SKF Duralife[2])	V	FPM	FKM
Polytetrafluoroethylene	T	PTFE	PTFE

1) American Society for Testing and Materials
2) Previously named *LongLife*

SKF Duralife[1] (V)

The fluoro rubber (FPM) compound, SKF Duralife, has been developed by SKF and is characterized by its very good wear, thermal and chemical resistance. Its resistance to weather and ageing from UV light and ozone is also very good and its gas permeability is very slight.

SKF Duralife has exceptional properties even under harsh environmental conditions and can withstand operating temperatures ranging from –20 to +200 °C *(–5 to +390 °F)*. In applications with low dynamic runout, the temperature range can be extended down to –40 °C *(–40 °F)*. SKF also offers special low-temperature fluoro rubber compounds on request.

SKF Duralife is also resistant to oils and hydraulic fluids, fuels and lubricants, mineral acids and aliphatics as well as aromatic hydrocarbons that would cause many other seal materials to fail. Seals made of SKF Duralife can also tolerate dry running of the lip for short periods. The seals should not be used in the presence of esters, ethers, ketones, certain amines and hot anhydrous hydrofluorides. Because of the compound's valuable properties, SKF manufactures seals with sealing lips made of SKF Duralife for all common shaft diameters.

Polytetrafluoroethylene (PTFE)

PTFE is a thermoplastic polymer that is compatible with a wide assortment of lubricants and features chemical resistance that is far superior to that of any other sealing lip material. PTFE has a smooth, dirt-resistant surface. Seals with PTFE lips can accommodate high surface speeds while offering extended service life. The seals can tolerate dry running and are particularly valuable in highly contaminated applications because of their excellent exclusion ability. PTFE is used for auxiliary sealing elements or for primary sealing lips for special applications. For optimum performance, PTFE sealing elements require a high-quality sealing counterface and extra care during installation. The normal operating temperature range extends from –70 to +200 °C *(–90 to +390 °F)*, but may go up to 250 °C *(480 °F)*.

Polyacrylate elastomer

Polyacrylate elastomers are more heat resistant than nitrile rubber or SKF Duralip. The operating temperature range for polyacrylate elastomers lies between –40 and +150 °C *(–40 and +300 °F)* and in some fluids the upper limit may be extended to 175 °C *(345 °F)*. Seals of polyacrylate are resistant to ageing and ozone and are also suitable for use with lubricants containing EP additives. They should not be used to seal water, acids or alkalis etc. Dry running should be avoided.

Silicone rubber

Silicone rubber is characterized by high thermal resistance and can withstand temperatures ranging from –60 to +200 °C *(–76 to +390 °F)*. Silicone rubber absorbs lubricants, thereby minimizing friction and wear. SKF silicone rubber seals are particularly suitable for applications with very low or very high temperatures and for low-friction sealing of bearing arrangements. They are not very resistant to oxidized oils or certain EP additives and should be protected against abrasive substances. Sealing lips made of silicone rubber should not be exposed to dry running.

[1] Previously named *LongLife*

⚠ WARNING

At temperatures above 300 °C *(570 °F)*, all fluoro elastomers and PTFE compounds give off dangerous fumes. This can occur, for example, if a welding torch is used when removing a bearing.

Although the fumes are only produced at such high temperatures, once heated, the seals will be dangerous to handle even when they have cooled down. If it is necessary to handle PTFE or fluoro elastomer seals that have been subjected to the high temperatures mentioned above, the following safety precautions should be observed:

- Protective goggles and gloves should always be worn.
- The remains of seals should be put in an airtight plastic container marked "Material will etch".
- Comply with the safety precautions included in the material safety data that can be provided upon request.

If there is contact with your skin, this should be washed with soap and plenty of water. Wash your eyes with plenty of water if these materials get into your eyes. A doctor should always be consulted. This also applies if the fumes have been inhaled.

Wear resistance

The wear resistance of a seal depends largely on the sealing lip material, as well as on the shaft surface finish, type of lubricant, circumferential speed, temperature and pressure differentials.

A comparison of wear resistance for various sealing lip materials used by SKF is provided in **diagram 2**. It is valid for seals of the same size, operating under identical conditions.

Diagram 2

Wear resistance for various sealing lip material

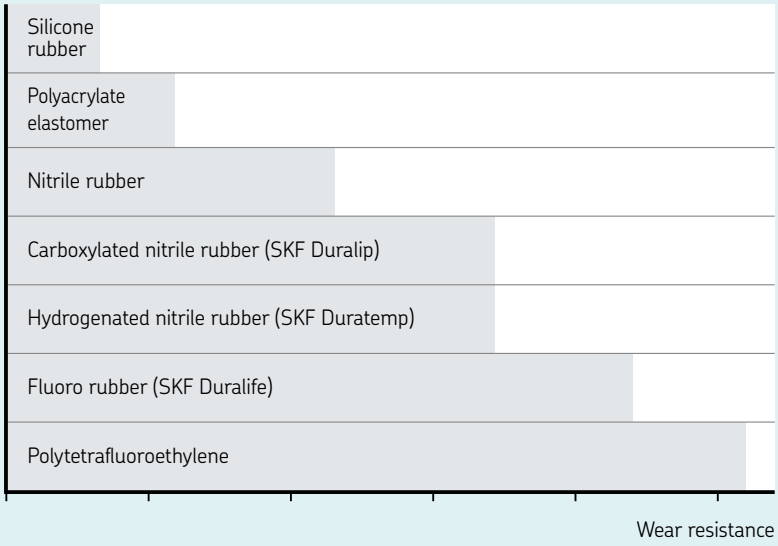

Operating temperatures

Both low and high temperatures influence the sealing performance. At low temperatures, the sealing lip loses its elasticity and becomes hard and brittle. Sealing efficiency decreases and the seal becomes more susceptible to mechanical damage.

For applications where temperatures are continuously high, special high-temperature lip materials should be used, for example, PTFE or the SKF fluoro rubber material, compounds like SKF Duralife.

Friction, circumferential speed, viscosity of the medium being sealed as well as the specific heat transfer along the shaft influence the temperature at the sealing position and the temperature between the lip and lubricant film on the counterface. High temperatures generally lead to a breakdown of the lubricant film, resulting in insufficient lubrication, one of the most common causes of premature seal failure.

The static sealing ability between the outside diameter of the seal and the housing bore may also be affected if these components are made of different materials with significantly different coefficients of expansion and shrinkage.

Refer to **diagram 3** to view the permissible operating temperature ranges of sealing lip materials normally used by SKF.

Diagram 3

Permissible operating temperatures

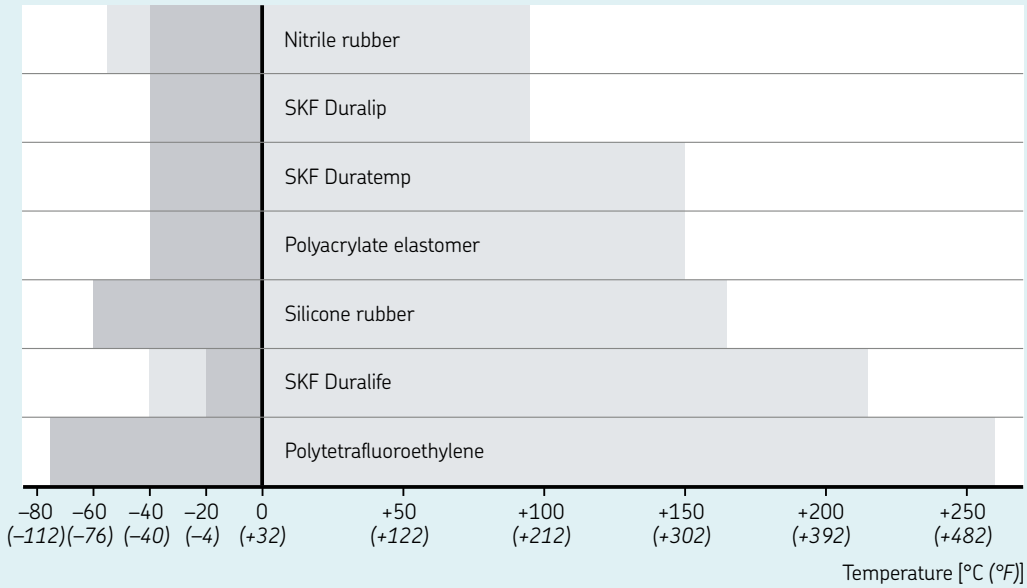

Chemical resistance

In **table 2**, *Chemical resistance* (→ **pages 37** to **46**), information is provided regarding the resistance of SKF sealing lip materials to most of the substances encountered in industrial applications. The information is based on in-house testing and the experience of users, as well as information from the suppliers of the various materials. Unless otherwise stated, the information is valid for media of commercial purity and quality.

The chemical resistance of a seal is influenced by temperature, pressure and the amount of media present. Other important factors to consider when selecting a suitable sealing lip material include:

- Type of service (static or dynamic)
- Circumferential speed of the sealing lip
- Shaft and housing materials
- Surface finish of the seal counterface

Because the above mentioned factors also influence the service life and performance of the seal, the information contained in the table *Chemical resistance* can only be considered as a rough guide.

Explanation for table 2 (→ pages 37 to **46), *Chemical resistance***

RT = room temperature [*20 °C (70 °F)*]
1 = minor effect
2 = moderate effect
3 = static only
4 = not recommended
5 = insufficient data, test before use

Table 2

Chemical resistance

Medium	Temperature	Medium's effect on sealing lip material			
		R, D, H	V	P	S
–	°C (*°F*)	–	–	–	–
A					
Acetaldehycle	RT	4	4	4	2
Acetamide	RT	1	2	4	2
Acetic acid,100% (glacial)	60 (*140*)	3	3	4	2
Acetic acid, 30%	RT	2	2	4	1
Acetic acid, 3% (vinegar)	RT	2	1	4	1
Acetic anhydride	RT / 80 (*175*)	3	4	4	3
Acetone	RT	4	4	4	3
Acetophenone	RT	4	4	4	4
Acetylene	60 (*140*)	1	1	5	2
Acrylonitrile	RT / 60 (*140*)	4	3	4	4
Adipic acid (aq)	RT	1	1	5	5
Alum (aq)	100 (*210*)	1	1	4	1
Aluminium acetate (aq)	RT	2	4	4	4
Aluminium chloride (aq)	RT	1	1	1	2
Aluminium fluoride (aq)	RT	1	1	5	2
Aluminium nitrate (aq)	RT	1	1	5	2
Aluminium phosphate (aq)	RT	1	1	5	1
Aluminium sulphate (aq)	RT / 60 (*140*)	1	1	4	1
Ammonia (anhydrous)	RT	2	4	4	3
Ammonia gas	RT	1	4	4	2
Ammonia gas	*80 (175)* / 100 (*210*)	4	4	4	1
Ammonium carbonate (aq)	RT / 60 (*140*)	2	5	4	5
Ammonium chloride (aq)	RT / 60 (*140*)	1	1	5	5
Ammonium chloride (dry) (sal ammoniac)	RT	1	1	1	2
Ammonium nitrate (aq)	RT	1	5	2	5
Ammonium persulphate (aq)	RT	4	5	4	5
Ammonium phosphate (aq)	RT / 60 (*140*)	1	5	5	1
Ammonium sulphate (aq)	100 (*210*)	1	4	4	5
Amyl acetate	RT	4	4	4	4
Amyl alcohol	60 (*140*)	2	2	4	4
Aniline	60 (*140*) / 100 (*210*)	4	3	4	4
Aniline dyes	RT	4	2	4	3
Aniline hydrochloride	RT	2	2	4	4
Aniline hydrochloride	100 (*210*)	4	5	5	5
Animal fats	80 (*175*)	1	1	1	2
Aqua Regia	RT	4	5	4	4
Arsenic acid	RT / 60 (*140*)	1	1	3	1
Arsenic trichloride (aq)	RT	1	5	5	5
Asphalt (liquid)	100 (*210*)	2	2	4	4
B					
Barium chloride (aq)	RT / 60 (*140*)	1	1	1	1
Barium hydroxide (aq)	RT / 60 (*140*)	1	1	4	1
Barium sulphate	RT / 60 (*140*)	1	1	4	1
Barium sulphide (aq)	RT / 60 (*140*)	1	1	4	1
Beer	RT	1	1	4	1
Benzaldehyde	RT / 60 (*140*)	4	4	4	4
Benzene	RT	4	1	4	4
Benzene sulphonic acid	RT	4	1	4	4
Benzoic acid	RT / 60 (*140*)	4	1	4	4
Benzoyl chloride	RT	4	1	4	5
Benzyl alcohol	RT / 60 (*140*)	4	1	1	2
Benzyl benzoate	50 (*120*) / 60 (*140*)	4	1	4	5
Benzyl chloride	RT	4	1	4	4

con. table 2

Chemical resistance

Medium	Temperature	Medium's effect on sealing lip material			
		R, D, H	V	P	S
–	°C (*°F*)	–	–	–	–
Blast furnace gas	100 (*210*)	4	1	4	1
Borax (aq)	RT / 60 (*140*)	2	1	5	2
Bordeaux mixture	RT	2	1	4	2
Boric acid	60 (*140*) / 100 (*210*)	1	1	4	1
Brake fluid, ATE	80 (*175*)	4	4	4	1
Brake fluid, glycolether	80 (*175*)	4	5	4	1
Brine (sodiumchloride, aq)	RT / 50 (*120*)	1	1	4	1
Bromine, anhydrous (liquid / gaseous)	RT / 50 (*420*)	4	1	4	4
Bromine trifluoride	RT	4	4	4	4
Bromine water	RT	4	1	4	4
Bromo benzene	RT	4	1	4	4
Bunker oil	60 (*140*)	1	1	1	2
Butadiene (gaseous or liquified)	RT	4	1	4	4
Butane (gaseous or liquified)	RT	1	1	1	4
Butter (animal fat)	RT / 80 (*175*)	1	1	1	2
Butyl acetate	RT	4	4	4	4
Butyl acrylate	RT	4	4	4	5
Butyl alcohol	RT	2	1	4	2
Butyl amines	RT	3	4	4	4
Butylene	RT	2	1	4	4
Butyl stearate	50 (*120*)	2	1	5	5
Butyr aldehyde	RT	4	4	4	4
C					
Calcium acetate (aq)	RT	2	4	4	4
Calcium bisulphite (aq)	RT	1	1	4	1
Calcium chloride (aq)	60 (*140*)	1	1	1	1
Calcium hydroxide (aq)	RT	1	1	4	1
Calcium hypochlorite (aq)	RT / 60 (*140*)	2	1	4	2
Calcium nitrate (aq)	RT / 40 (*105*)	1	1	1	2
Cane sugar liquors	RT / 60 (*140*)	1	1	4	1
Carbon dioxide	RT	1	1	5	2
Carbon disulphide	RT	3	1	3	4
Carbonic acid	RT	2	1	1	1
Carbon monoxide	60 (*140*)	1	1	5	1
Carbon tetrachloride	RT / 60 (*140*)	3	1	4	4
Castor oil	RT	1	1	1	1
Cellosolve (ethyl glycol)	RT	4	3	4	4
Cellosolve acetate (ethyl glycol acetate)	RT	4	4	4	4
Chlorine (dry)	RT	4	1	4	4
Chlorine (wet)	RT	4	1	4	4
Chlorine dioxide	RT	4	1	4	5
Chlorine trifluoride	RT	4	4	4	4
Chloroacetic acid	60 (*140*)	4	4	4	5
Chloroacetone	RT	4	4	4	4
Chlorobenzene	RT	4	1	4	4
Chlorobromomethane	RT	4	1	4	4
Chlorobutadiene	RT	4	1	4	4
Chloroform	RT	4	1	4	4
Chlorosulphonic acid	RT	4	4	4	4
Chlorotoluene	RT	4	1	4	4
Chromic acid	60 (*140*)	4	1	4	3
Citric acid	60 (*140*) / 70 (*160*)	1	1	1	1
Cobalt chloride (aq)	RT	1	1	4	2
Coconut oil	50 (*120*) / 70 (*160*)	1	1	1	1

con. table 2

Chemical resistance

Medium	Temperature	Medium's effect on sealing lip material			
		R, D, H	V	P	S
–	°C (*°F*)	–	–	–	–
Cod liver oil	RT	1	1	1	2
Coke oven gas	80 (*175*)	4	1	4	2
Copper acetate (aq)	RT	2	4	4	4
Copper chloride (aq)	RT	1	1	1	1
Copper sulphate (aq)	60 (*140*)	1	1	4	1
Corn oil	RT / 60 (*140*)	1	1	1	1
Cottonseed oil	RT / 70 (*160*)	1	1	1	1
Cresol	50 (*120*) / 70 (*160*)	4	1	4	4
Cumene (isopropylbenzene)	RT	4	1	4	4
Cyclohexane	RT	1	1	1	4
Cyciohexanol	RT	3	1	5	4
Cyclohexanone	RT	4	4	4	4
p-Cymene	RT	4	1	4	4
D					
Decahydronaphthalene (decalin)	RT / 60 (*140*)	4	1	5	4
Detergent	RT	1	1	4	1
Developing fluids (photography)	RT	1	1	5	1
Diacetone alcohol	RT	4	4	4	2
Dibenzyl ether	RT	4	4	5	5
Dibutyl amine	RT	4	4	4	3
Dibutyl ether	RT	4	3	3	4
Dibutyl phthalate	RT / 60 (*140*)	4	3	4	2
Dibutyl sebacate	RT / 60 (*140*)	4	2	4	2
o-Dichlorobenzene	RT	4	1	4	4
Dicyclohexylamine	RT	3	4	4	5
Diethyl amine	RT	2	4	4	2
Diethyl benzene	RT	4	1	5	4
Diethyl ether	RT	4	4	3	4
Diethyl sebacate	RT	2	2	4	2
Diisopropyl benzene	RT	4	1	5	5
Dimethyl aniline (Xylidine)	RT	3	4	4	4
Dimethyl ether	RT	1	2	4	1
Dimethyl formamide	RT / 60 (*140*)	2	4	4	2
Dimethyl phthalate	RT	4	2	4	5
Dioctyl phthalate	RT / 60 (*140*)	3	2	4	3
Dioctyl sebacate	RT / 60 (*140*)	4	2	4	3
Dioxane	RT / 60 (*140*)	4	4	4	4
Dioxolane	RT	4	4	4	4
Dipentene	RT	2	1	4	4
Diphenyl oxide	RT	4	1	4	3
Dowtherm oils	100 (*210*)	4	1	4	3
Dry cleaning fluids	40 (*105*)	3	1	4	4
E					
Epichlorohydrin	RT	4	4	4	4
Ethane	RT	1	1	1	4
Ethanol (denatured alcohol)	RT	1	1	4	1
Ethanolamine (monoethanolamine)	RT	2	4	4	2
Ethanolamine (di-andtriethanolamine)	50 (*120*)	5	50	-120	5
Ethyl acetate	RT	4	4	4	2
Ethyl acrylate	RT	4	4	4	2
Ethyl benzene	RT	4	1	4	4
Ethyl benzoate	RT	4	1	4	4
Ethyl chloride	RT	1	1	4	4

con. table 2

Chemical resistance

Medium	Temperature	Medium's effect on sealing lip material			
		R, D, H	V	P	S
–	°C (*°F*)	–	–	–	–
Ethylene	RT	1	1	5	5
Ethylene chloride	RT	4	2	4	4
Ethylene chlorohydrin	RT	4	1	4	3
Ethylene diamine	RT	1	4	4	1
Ethylene glycol	RT	1	1	2	1 / 2
Ethylene glycol	100 (*210*)	1	1	3	1 / 2
Ethylene oxide	RT	4	4	4	4
Ethylene trichloride	RT	4	1	4	4
Ethyl ether	RT	3	4	4	4
Ethyl formate	RT	4	1	5	5
Ethyl glycol (Cellosolve)	RT	4	3	4	4
Ethyl glycol acetate (Cellosolve acetate)	RT	4	4	4	4
Ethyl silicate	RT	1	1	5	5
F					
Fatty acids	100 (*210*)	2	1	5	3
Ferric chloride (aq)	RT	1	1	1	2
Ferric nitrate (aq)	RT	1	1	1	3
Ferric sulphate (aq)	RT	1	1	1	2
Fish oil	RT	1	1	5	1
Fluorine (liquified)	RT	4	2	4	4
Fluorobenzene	RT	4	1	4	4
Fluorosilic acid	60 (*140*)	1	1	5	4
Formaldehyde	RT	3	1	4	2
Formaldehyde, 37%	below 100 (*210*)	2	1	4	2
Formic acid	RT / 60 (*140*)	2	3	5	2
Fuels					
– Aeroenginefuels JP:					
– JP3 (MIL-J-5624 G)	RT	1	1	2	4
– JP4 (MIL-J-5624 G)	RT	1	1	2	4
– JP5 (MIL-J-5624 G)	RT	1	1	2	4
– JP6 (MIL-F-25656 B)	RT / 60 (*140*)	1	1	5	4
– ASTM reference fuels:					
– ASTM-A (MIL-S-3136B Typ 1)	RT / 60 (*140*)	1	1	2	4
– ASTM-B (MIL-S-3136B Typ 111)	RT / 60 (*140*)	1	1	5	4
– ASTM-C	RT / 60 (*140*)	2	1	4	4
– Diesel fuel	60 (*140*)	1	1	2	2
– Fuel oil	60 (*140*)	1	1	1	4
– Gasohol (10% ethanol or methanol)	RT	2	3	4	4
– Kerosene	RT	1	1	1	4
– Mineral oil	100 (*210*)	1	1	1	2
– Petrol	RT	1	1	4	4
Fumaric acid	RT	1	1	4	2
Furan	RT	4	5	4	5
Furfural	RT	4	4	4	4
Furfuran	RT	4	5	4	5
G					
Gelatine (aq)	40 (*105*)	1	1	4	1
Glucose	RT	1	1	5	1
Glue	RT	1	1	5	1
Glycerin	100 (*210*)	1	1	3	1
Glycols	100 (*210*)	1	1	4	1 / 2

con. table 2

Chemical resistance

Medium	Temperature	Medium's effect on sealing lip material			
		R, D, H	V	P	S
–	°C (*°F*)	–	–	–	–
H					
n-Hexaldehyde	RT	4	4	5	2
Hexane	RT / 60 (*140*)	1	1	1	4
1-Hexene	RT	2	1	1	4
Hexyl alcohol	RT	1	1	4	2
Hydraulic fluids					
– Hydraulic oils (acc. to DIN 51524)	80 (*175*)	1	1	1	3
– Hydraulic fluids (acc. To DIN 51502)					
– HFA (oil in water emulsion)	55 (*130*)	1	1	5	5
– HFB (water in oil emulsion)	60 (*140*)	1	1	5	5
– HFC (aqueous Polymer solutions)	60 (*140*)	1	1	5	1
– HFD (phosphoric esters)	80 (*175*)	4	2 / 4	4	4
– Skydrol 500	80 (*175*)	4	4	4	3
– Skydrol 7000	80 (*175*)	4	2	4	3
Hydrazine	RT	2	4	5	3
Hydrobromic acid	RT / 60 (*140*)	4	1	4	4
Hydrochloric acid (conc.)	RT	3	1	4	3
Hydrochloric acid (conc.)	80 (*175*)	4	2	4	4
Hydrocyanic acid (Prussic acid)	RT	2	1	4	3
Hydrofluoric acid (conc.)	RT	4	1	4	4
Hydrofluoric acid (conc.)	100 (*210*)	4	3	4	4
Hydrofluoric acid (anhydrous)	100 (*210*)	4	4	4	4
Hydrogen gas	RT	1	1	2	3
Hydrogen peroxide (90%)	RT	4	2	4	2
Hydrogen sulphide (wet)	RT / 100 (*210*)	4	4	4	3
Hydroquinone	RT	4	2	4	5
Hypochlorous acid	RT	4	1	4	5
I					
Iodine pentafluoride	RT	4	4	4	4
Isobutyl alcohol	RT	2	1	4	1
Isooctane	RT	1	1	1	4
Isophorone	RT	4	4	4	4
Isopropyl acetate	RT / 80 (*175*)	4	4	4	4
Isopropyl alcohol	RT 60 (*140*)	2	1	4	1
Isopropyl chloride	RT	4	1	4	4
Isopropyl ether	RT / 60 (*140*)	2	4	3	4
L					
Lactic acid	RT	1	1	4	1
Lactic acid	100 (*210*)	4	1	4	2
Lard	80 (*175*)	1	1	1	2
Lavender oil	RT	2	1	2	4
Lead acetate (aq)	RT / 60 (*140*)	2	2	4	4
Lead nitrate (aq)	RT	1	5	5	2
Linoleic acid	RT	2	2	5	2
Linseed oil	*RT 60 (140)*	1	1	1	1
Lubricants					
– ASTM oil No.1	100 (*210*)	1	1	1	3
– ASTM oil No.2	100 (*210*)	1	1	1	3
– ASTM oil No.3	100 (*210*)	1	1	1	3
– ATF oils, type A	100 (*210*)	1	1	1	4
– ATF oils, type I	100 (*210*)	1	1	1	4
– ATF oils, type II	100 (*210*)	1	1	1	4
– ATF oils, type F	100 (*210*)	1	1	1	4

con. table 2

Chemical resistance

Medium	Temperature	Medium's effect on sealing lip material			
		R, D, H	V	P	S
–	°C (*°F*)	–	–	–	–
– ATF oils, type Mercon	100 (*210*)	1	1	1	4
– EP lubes	100 (*210*)	2	1	1	4
– Fluorolube	100 (*210*)	1	2	5	1
– Grease MIL-G-7118A	80 (*175*)	1	1	3	3
– Grease MIL-G-7711A	80 (*175*)	1	1	1	3
– Lubricating oils (petroleum)	100 (*210*)	1	1	1	4
– Red oil (MIL-H-5606)	100 (*210*)	1	1	1	4
– RJ-1 (MIL-F-25558 B)	100 (*210*)	1	1	1	4
– RJ-1 (MIL-F-25576 C)	100 (*210*)	1	1	1	4
– Motor oil SAE 30	100 (*210*)	1	1	1	1
– Transmission oil SAE 90	100 (*210*)	1	1	1	4
– Transmission oil MIL-L-23699 A	100 (*210*)	1	1	3	3
– Silicone greases	120 (*250*)	1	1	1	3
– Silicone oils	120 (*250*)	1	1	1	3
– Transformer oil (Pyranol)	60 (*140*)	4	1	5	4
– Transformer oil	60 (*140*)	1	1	2	2
– Transmission fluid type A	RT	1	1	1	2
– Turbine oil	100 (*210*)	2	1	1	4
M					
Magnesium chloride (aq)	100 (*210*)	1	1	5	1
Magnesium hydroxide (aq)	100 (*210*)	2	1	4	5
Magnesium sulphate (aq)	100 (*210*)	1	1	4	1
Maleic acid	100 (*210*)	4	1	4	5
Maleic anhydride	*60 (140)*	4	4	4	5
Malic acid	RT	1	1	4	2
Mercury	RT / 60 (*140*)	1	1	5	5
Mercury chloride (aq)	RT / 60 (*140*)	1	1	5	5
Mesityl oxide	RT	4	4	4	4
Methane	RT	1	2	1	4
Methanol (methyl alcohol)	60 (*140*)	1	1	4	4
Methyl acetate	RT	4	4	4	4
Methyl acrylate	RT	4	4	4	4
Methyl aniline	RT	4	2	4	5
Methyl bromide	RT	2	1	3	5
Methyl cellosolve (methyl glycol)	RT	3	4	4	4
Methyl chloride	RT	4	2	4	4
Methyl cyclopentane	RT	4	2	4	4
Methylene chloride	RT	4	2	4	4
Methyl ethyl ketone	RT	4	4	4	4
Methyl formate	RT	4	5	5	5
Methyl glycol (Cellosolve)	RT	3	4	4	4
Methyl isobutyl ketone	RT	4	4	4	4
Methyl methacrylate	RT	4	4	4	4
Methyl salicylate	RT	4	5	5	5
Milk	RT	1	1	4	1
Mustard gas	RT	5	5	5	1
N					
Naphtha	RT	2	1	2	4
Naphthalene	60 (*140*)	4	1	5	4
Naphthalenic acid	RT	2	1	5	4
Natural gas	RT	1	1	2	1
Neat-s-foot oil	RT / 60 (*140*)	1	1	1	2
Nickel acetate (aq)	RT	2	4	4	4

con. table 2

Chemical resistance

Medium	Temperature	Medium's effect on sealing lip material			
		R, D, H	V	P	S
–	°C (*°F*)	–	–	–	–
Nickel chloride	RT	1	1	4	1
Nickel sulphate (aq)	RT / 60 (*140*)	1	1	4	1
Nitric acid (conc.)	RT	4	3	4	4
Nitric acid (fuming)	RT	4	4	4	4
Nitric acid (dilute)	RT	4	1	4	2
Nitrobenzene	*50 (120)*	4	2	4	4
Nitroethane	RT	4	4	4	4
Nitrogen	RT	1	1	1	1
Nitrogen tetroxide	RT	4	4	4	4
Nitromethane	RT	4	4	4	4
O					
Octadecane	RT / 50 (*120*)	1	1	2	4
n-Octane	RT	2	1	4	4
Octyl alcohol	RT	2	1	4	2
Oleic acid	70 (*160*)	1	2	2	4
Olive oil	60 (*140*)	1	1	1	3
Oxalic acid	70 (*160*)	2	1	5	4
Oxygen	RT	2	1	2	1
Oxygen	> 100 (*210*)	4	2	4	2
Ozone	RT	4	1	2	1
P					
Palmitic acid	60 (*140*)	1	1	4	4
Peanut oil	RT / 50 (*120*)	1	1	1	1
Perchloric acid	RT	4	1	4	4
Perchloroethylene	RT / 60 (*140*)	2	1	4	4
Petroleum	below 120 (*250*)	1	1	2	2
Petroleum	above 120 (*250*)	4	2	4	4
Petroleum ether	RT / 60 (*140*)	1	1	1	4
Petroleum gas (liquified)	RT	1	1	3	3
Phenol	60 (*140*) / 100 (*210*)	4	1	4	4
Phenyl ethyl ether	RT	4	4	4	4
Phenyl hydrazine	RT / 60 (*140*)	4	1	4	5
Phoron (diisopropylidene acetone)	60 (*140*)	4	4	4	4
Phosphoric acid, 20%	50 (*120*) / 60 (*140*)	2	1	5	2
Phosphoric acid, 45%	50 (*120*) / 60 (*140*)	4	1	5	3
Phosphorus trichloride	RT	4	1	5	5
Pickling solution	RT	4	2	4	4
Picric acid	RT	4	1	5	4
Pinene	RT	2	1	4	4
Pine oil	RT	4	1	5	4
Piperidine	RT	4	4	4	4
Potassium acetate (aq)	RT	2	4	4	4
Potassium chloride (aq)	RT / 60 (*140*)	1	1	1	1
Potassium cyanide (aq)	RT / 50 (*120*)	1	1	1	1
Potassium dichromate (aq)	RT	1	1	1	1
Potassium hydroxide (aq)	60 (*140*)	2	4	4	4
Potassium nitrate (aq)	RT / 60 (*140*)	1	1	1	1
Potassium sulfate (aq)	RT / 60 (*140*)	1	1	4	1
Propane	RT	1	1	1	4
Propyl acetate	RT	4	4	4	4
Propyl alcohol	RT / 60 (*140*)	1	1	4	1
Propylene	RT	4	1	4	4
Propylene oxide	RT	4	4	4	4

con. table 2

Chemical resistance

Medium	Temperature	Medium's effect on sealing lip material			
		R, D, H	V	P	S
–	°C (*°F*)	–	–	–	–
Prussic acid (hydrocyanic acid)	RT	2	1	4	3
Pyridine	RT	4	4	4	4
Pyroligneous acid	RT	4	4	4	5
Pyrrole	RT	4	4	4	2
R					
Rapeseed oil	RT	2	1	2	4
Refrigerants (acc.to DIN 8962)	RT	2	1	5	4
– R 11	RT	2	1	5	4
– R 12	RT	1	2	1	4
– R 13	RT	1	1	5	4
– R 13 B1	RT	1	1	5	4
– R 14	RT	1	1	5	4
– R 21	RT	4	4	5	4
– R 22	RT	4	4	2	4
– R 31	RT	4	4	5	5
– R 32	RT	1	4	5	5
– R 112	RT	3	1	5	4
– R 113	RT	1	2	5	4
– R 114	RT	1	2	5	4
– R 114 B	RT	2	2	5	4
– R 115	RT	1	2	5	5
– R C 318	RT	1	2	5	5
S					
Salicylic acid	RT	2	1	5	5
Sea water	RT	1	1	4	1
Silver nitrate (aq)	RT	2	1	1	1
Soap solution	RT	1	1	4	1
Sodium acetate (aq)	RT	2	4	4	4
Sodium bicarbonate (aq)	60 *(140)*	1	1	5	1
Sodium bisulphite (aq)	*100 (210)*	1	1	4	1
Sodium carbonate (soda)	RT / 60 *(140)*	1	1	5	1
Sodium chloride (aq)	RT / 100 *(210)*	1	1	5	1
Sodium cyanide (aq)	RT	1	1	5	1
Sodium hydroxide (aq)	RT	2	2	3	2
Sodium hypochlorite (aq)	RT / 50 *(120)*	2	1	4	5
Sodium metaphosphate	RT / 60 *(140)*	1	1	5	2
Sodium nitrate (aq)	RT / 60 *(140)*	2	5	5	4
Sodium phosphate (aq)	RT / 60 *(140)*	1	1	4	4
Sodium silicate (aq)	RT / 60 *(140)*	1	1	5	5
Sodium sulphate (aq) (Glauber's salt)	RT / 60 *(140)*	1	1	4	1
Sodium thiosulphate (aq)	RT / 50 *(120)*	2	1	4	1
Soyabean oil	RT	1	1	1	1
Stannic chloride (aq)	RT / 80 *(175)*	1	1	5	2
Stannous chloride (aq)	RT / 80 *(175)*	1	1	5	2
Steam	below 150 *(300)*	4	4	4	3
Steam	above 150 *(300)*	4	4	4	4
Stearic acid	60 *(140)*	2	2	4	2
Stoddard solvent	RT	1	1	1	4
Styrene	RT	4	2	4	4
Sucrose solution	RT / 60 *(140)*	1	1	4	1
Sulphur	RT / 60 *(140)*	4	1	4	3
Sulphur chloride (aq)	RT	3	1	4	3
Sulphur dioxide (dry)	RT / 60 *(140)*	4	1	4	2

con. table 2

Chemical resistance

Medium	Temperature	Medium's effect on sealing lip material			
		R, D, H	V	P	S
–	°C (*°F*)	–	–	–	–
Sulphur dioxide (liquified)	RT / 60 (*140*)	4	1	4	2
Sulphur dioxide (wet)	RT / 60 (*140*)	4	1	4	2
Sulphur hexafluoride	RT	2	1	4	2
Sulphuric acid (conc.)	RT / 50 (*120*)	4	1	4	4
Sulphuric acid (20%) (battery acid)	60 (*140*)	4	1	4	4
Sulphuric acid (dilute)	RT	3	1	2	4
Sulphurous acid	RT / 60 (*140*)	4	1	4	4
Sulphur trioxide	RT	4	1	4	2
T					
Tannic acid	RT / 60 (*140*)	1	1	4	2
Tar,bituminous	RT	2	1	4	2
Tartaric acid	60 (*140*)	1	1	5	1
Tepineol	RT	2	1	5	5
Tetrabromoethane	RT	4	1	4	4
Tetrabromomethane	RT	4	1	5	4
Tetrabutyl titanate	RT	2	1	5	5
Tetrachloroethylene	60 (*140*)	4	2	4	4
Tetraethyl lead	RT	2	1	5	5
Tetrahydrofuran	RT	4	4	4	4
Tetrahydronaphthalene (Tetralin)	RT	4	1	5	4
Thionyl chloride	RT	4	2	4	5
Titanium tetrachloride	RT	2	1	4	4
Toluene	RT	4	1	4	4
Toluene diisocyanate	RT	4	4	4	4
Triacetin	RT	2	1	4	5
Tributoxy ethyl phosphate	RT	4	1	4	5
Tributyl phosphate	RT / 60 (*140*)	4	4	4	4
Trichloroacetic acid	60 (*140*)	5	4	4	4
Trichloroethane	RT	4	1	4	4
Trichloroethylene	RT	4	1	4	4
Tricresyl phosphate	RT / 60 (*140*)	4	1	4	3
Triethanol amine	RT	2	4	4	5
Triethyl aluminium	RT	4	2	4	5
Triethyl borane	RT	4	1	4	5
Trinitrotoluene	RT	4	2	4	5
Trioctyl phosphate	RT / 60 (*140*)	4	2	4	3
Tung oil (China wood oil)	RT	1	1	1	4
Turpentine	RT	1	1	2	4
V					
Varnish	RT	2	1	4	4
Vegetable oil	60 (*140*)	1	1	1	2
Vinyl acetylene	RT	1	1	5	2
Vinyl chloride	RT	4	1	5	5
W					
Water	100 (*210*)	1	1	4	1
Whisky	RT	1	1	4	1
White oil	RT / 80 (*175*)	1	1	1	4
Wine	RT	1	1	4	1
Wood oil	RT	1	1	1	4

con. table 2

Chemical resistance

Medium	Temperature	Medium's effect on sealing lip material			
		R, D, H	V	P	S
–	°C (°F)	–	–	–	–
X					
Xylene	RT	4	1	4	4
Xylidine (di-methyl aniline)	RT	3	4	4	4
Z					
Zeolites	RT	1	1	5	5
Zinc acetate (aq)	RT	1	1	4	4
Zinc chloride (aq)	RT	1	1	4	1
Zinc sulphate (aq)	RT	1	1	4	1

Storage and handling of seals

General

The following guidelines for the storage and cleaning of seals are valid for natural and synthetic elastomeric materials and are in accordance with ISO 2230 and DIN 7716 standards. The storage guidelines set forth in DIN 7716 are valid for long-term storage.

Unfavourable storage conditions and improper handling can change the physical properties of most products made from natural or synthetic rubber. This can result in hardening or softening, permanent deformation, peeling or cracks, which can lead to a shortened service life or render the products altogether useless. These changes can be brought about by storing the products under stress or load or from the influence of oxygen, ozone, heat, light, moisture or solvents. When stored properly, elastomer products generally retain their properties for several years.

Storage

The storage area should be cool, dry, moderately ventilated and there should be as little dust as possible. Outdoor storage without protection should be avoided.

The appropriate storage temperature depends on the elastomer. The most favourable storage temperature for synthetic rubber seals is 15 to 25 °C *(60 to 80 °F)*.

Elastomers that have been subjected to low temperatures during transport or storage may become stiff. They should therefore be warmed and kept at a temperature of at least 20 °C *(70 °F)* before being unpacked and used in order to prevent exposure to condensation.

In heated storage rooms, the products should be shielded from the heat source. There should be at least 1 m *(3 ft.)* between the packages and the source of heat. In rooms where a heater with a fan is used, the distance should be greater. Storage in damp rooms should be avoided because of the risk of condensation. A storage facility with relative humidity below 65% is excellent.

Seals should be protected from light, particularly direct sunlight or artificial light with a high proportion of UV radiation. Any windows in the store should therefore be covered with a red or orange coating (never blue). Ordinary light bulbs are preferred for illumination.

Seals should be wrapped or stored in airtight containers, protecting them from atmospheric changes and particularly against drafts.

Because ozone is particularly damaging, steps must be taken to make sure that no ozone is produced in the storage facility as the result of using electric motors or other equipment that can produce sparks or other electric discharges. Combustion fumes and vapours that can produce ozone as the result of photochemical processes should be exhausted. For this reason, solvents, fuels, lubricants, chemicals, acids, disinfectants etc. should not be stored in the same room as the seals.

Elastomer products should not be subjected to tension, compression or other forms of load during storage as this can produce permanent deformations and cracks. Seals should therefore not be hung on hooks during storage. Certain metals, especially copper and manganese, damage elastomer products. Contact with these metals should therefore be avoided and the seals should be covered with layers of paper or polyethylene to prevent such contact.

In case it is necessary to repack the seals, packaging and covering materials should not contain substances such as copper or alloys containing copper, petroleum, oil etc. that can cause damage to the seals. The packaging materials should not contain softeners.

If the products are powdered, suitable powders are talcum, chalk, finely divided glimmer and rice starch.

Seals made of different materials should not be in contact with each other. This is particularly important when the seals are different in colour as this will avoid discolouration.

Seals should be stored for the shortest period of time possible. Where long-term storage is involved, care should be taken that newly arrived products are kept separate from those already in storage to enable use of seals on a first in, first out basis.

Cleaning and maintenance

In the event that cleaning is necessary, elastomers should be cleaned with warm, soapy water that does not exceed 30 °C *(85 °F)*, and air dried at room temperature.

Solvents such as trichloroethylene, carbon tetrachloride or hydrocarbons should not be used, nor should sharp-edged objects, wire brushes, emery cloth or sandpaper.

Elastomer / metal combinations can be cleaned using a 1:10 mixture of glycerine and alcohol.

Seal failure analysis

Leaking seals are not inevitable

Attitudes about seal performance are influenced by industry expectations and personal habits. But no matter where you are on the spectrum between vigilance and indifference, understand that there is always a better way. After all, the definition of insanity is doing the same thing and expecting a different result.

Consider the fishbone

A leaking seal means a defective seal that must be replaced right? As the fishbone diagram below shows, there are several potential causes of a leaking seal, and only one of the six categories involves a problem with the actual seal. SKF is committed to helping you identify the root causes of failure and find a better way. Contact your local SKF application engineer for help with troubleshooting.

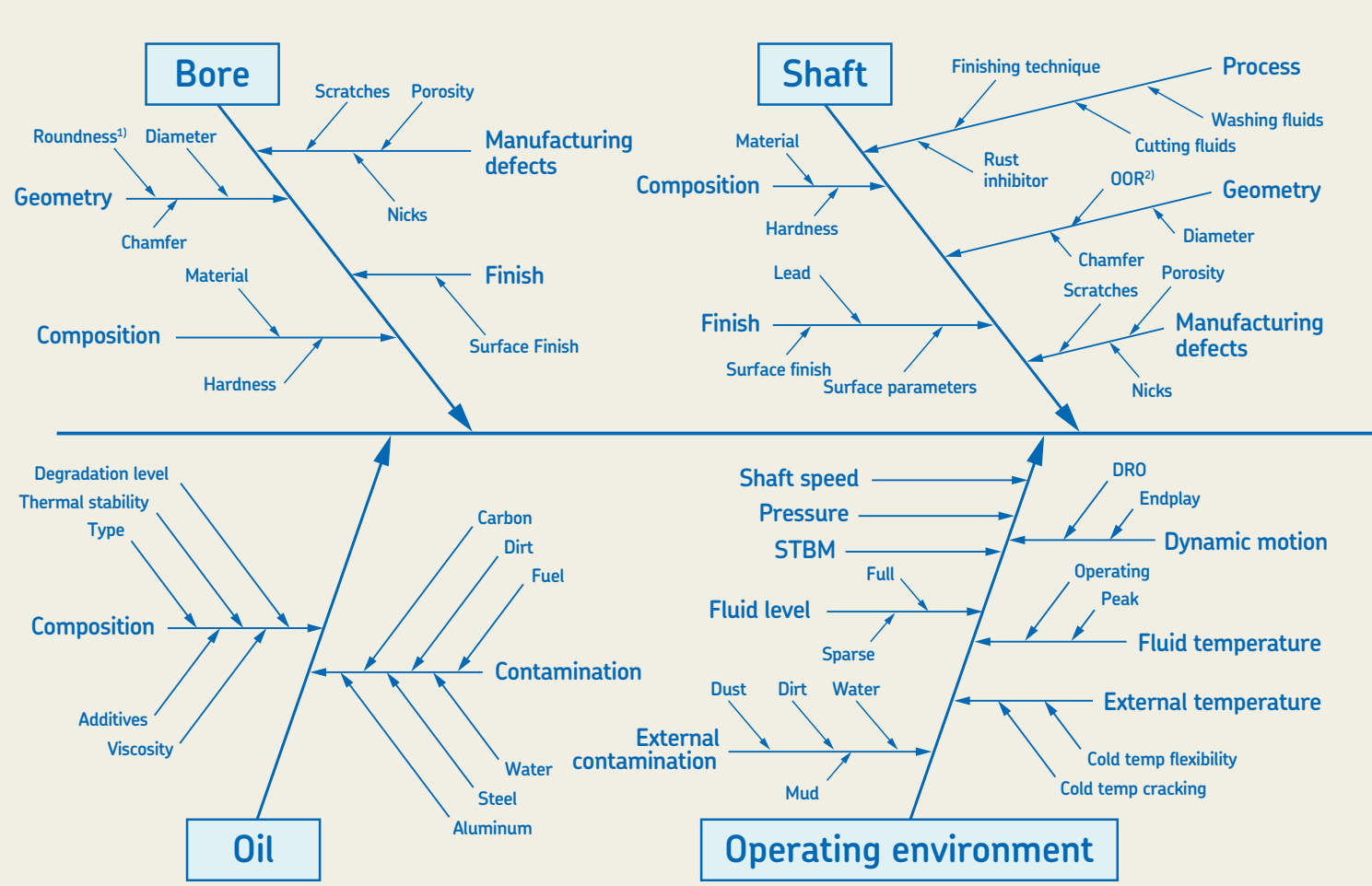

1) ODR – Outside Diameter Roundness
2) OOR – Out Of Round
3) RTV – Type of sealant: Room Temperature Vulcanization silicon sealant

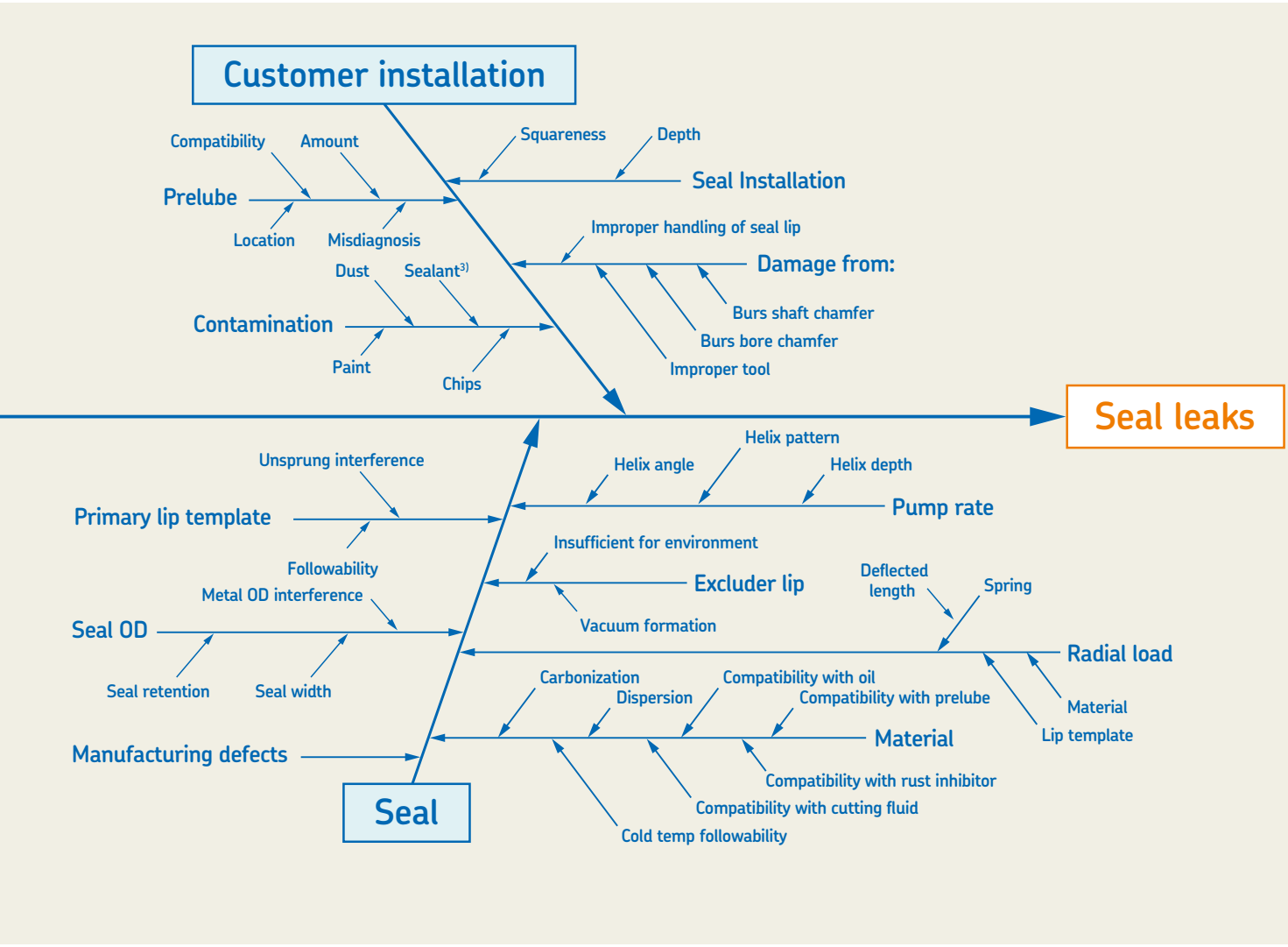
Customer installation
Compatibility
Amount
Prelube
Location
Misdiagnosis
Dust
Sealant3)
Contamination
Paint
Chips
Squareness
Depth
Seal Installation
Improper handling of seal lip
Damage from:
Burs shaft chamfer
Burs bore chamfer
Improper tool
Seal leaks
Unsprung interference
Primary lip template
Followability
Metal OD interference
Seal OD
Seal retention
Seal width
Manufacturing defects
Seal
Helix pattern
Helix angle
Helix depth
Pump rate
Insufficient for environment
Excluder lip
Vacuum formation
Deflected length
Spring
Radial load
Carbonization
Dispersion
Compatibility with oil
Compatibility with prelube
Material
Compatibility with rust inhibitor
Compatibility with cutting fluid
Cold temp followability
Material
Lip template

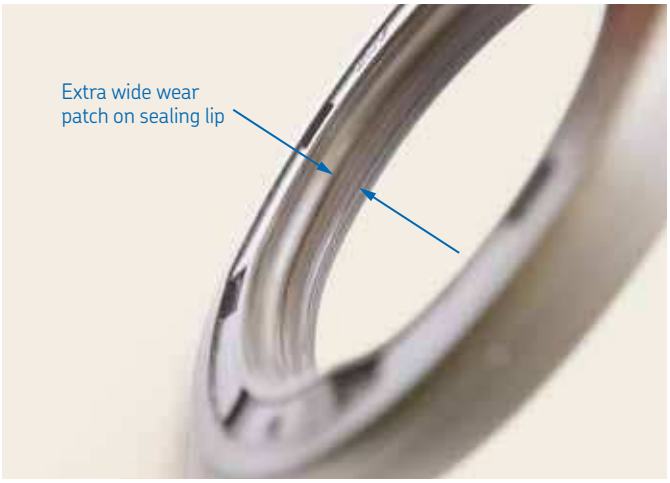

Excessive wear

Possible root causes

- Elevated internal operating pressure
- External contaminant ingress
- Excessive radial load or interference
- Lack of adequate lubrication
- Internal contaminant ingress
- Incorrect material selected for the application
- Seal reached normal end of life
- Shaft running surface too rough

Potential solutions

- Remove contamination
- Switch to high wear sealing material or increase lubrication at lip interface
- Follow RMA / ISO standards for surface finish
- Reduce radial load

Nicks, scratches, or cuts in lip contact area

Possible root causes

- Installation tool or bullet with sharp edge
- Seal installed over defects in shaft
- Seal installed over shaft through hole, keyway, or splines
- Inconsistent manufacturing trimming operation
- Damage caused during packaging or handling

Potential solutions

- Protect lip by covering splines, keyways and holes with chamfered sleeve or tape
- Keep screwdrivers and other sharp tools away from sealing lip
- Regularly inspect sealing lips before installation

Crosslink carbonization

Possible root causes

- Chemical bond occurs between amines in oil additives and fluorine in FKM compounds
- Penetrates the elastomer and hardens until cracks form
- Generally requires temperatures of 100 °C (*210 °F*) or higher

Potential solutions

- Switch material to HNBR if under-lip temperatures are below 95 °C (*203 °F*)
- Switch material to base-resistant FKM for higher temperatures
- Reduce interference or increase lubrication to decrease under-lip temperature

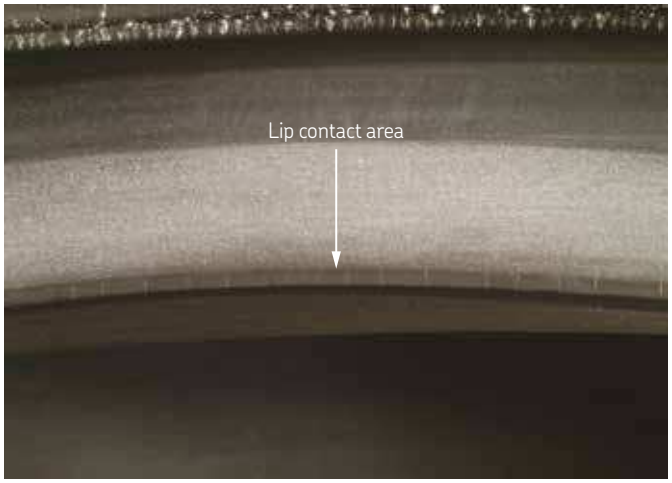

Axial cracking on NBR lip contact area

Possible root causes

- Elevated internal operating pressure
- High shaft speed
- Fluid compatibility
- Excessive under-lip temperature
- Insufficient lubrication at the lip interface

Potential solutions

- Change material to HNBR or FKM
- Increase lubrication
- Reduce radial interference

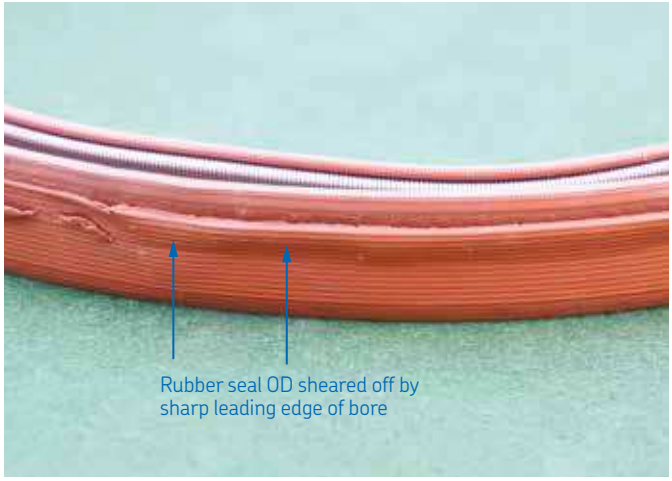

Inverted sealing lip

Possible root causes

- Poor assembly procedures
- High internal operating pressure

Potential solutions

- Switch to HDS7 springless design, HDS2 garter spring design with spring-cover, or HSS5
- Modify installation tool and / or procedure
- If failure is pressure-induced, use pressure seal

Seal damaged during installation

Possible root causes

- Improper or worn installation tool
- Direct contact with hammer on seal
- Inadequate lead in chamfer on the bore
- Undersized bore

Potential solutions

- Add proper bore chamfer per recommendations and check bore diameter
- Use installation tool designed for the specific installation procedure
- Reevaluate installation procedure

Irregular / damaged shaft surface finish

Possible root causes

- Excessively rough shaft may accelerate lip wear
- Overly smooth shaft may result in early leakage
- Poor shaft grinding process or none at all
- Change in shaft suppliers
- Installation or handling damage prior to assembly
- Contamination ingress
- Shaft hardness too soft for the application
- Hardened outer heat-treat layer too thin

Potential solutions

- Measure surface finish and shaft lead and compare to RMA / ISO standards
- Check for visual damage or irregular surface characteristics
- Reevaluate shaft packaging during handling and transport

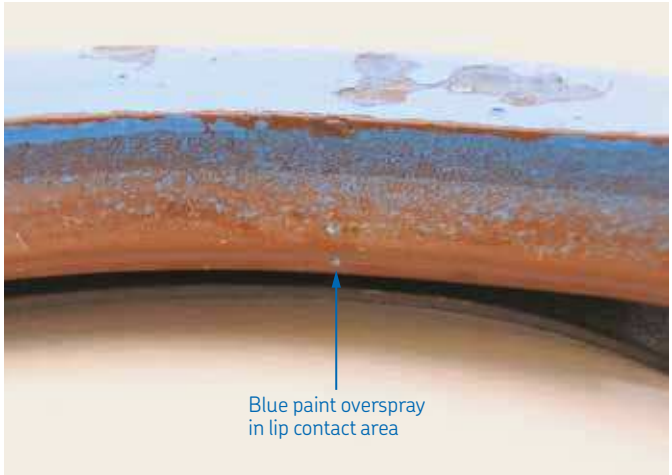

Paint overspray on sealing lip or contamination

Possible root causes

- Inadequate seal protection during manufacturing paint process
- Loose paint / contaminants get trapped under sealing lip
- Seal failure caused by contamination ingress

Potential solutions

- Use proper shielding during painting process
- Pack grease on air side to form a barrier from paint overspray
- Use v-ring on metal seal face to protect lip
- Choose seal with a dust lip to reduce contaminant ingression

FEA simulation in SKF

A brief history of FEA

The origins of the finite element method (FEM) date back to the 1940s when the basic principle of dividing complex problems into simpler parts (finite elements) and mathematically describing their interaction was established.

SKF has been using FEA for many years in various engineering disciplines to aid the product development and improve the product quality while optimizing validation and testing costs.

In particular the nonlinear and complex field of sealing technology led SKF to develop its own FEA tools, where available standard tools were impractical, inefficient or not powerful enough.

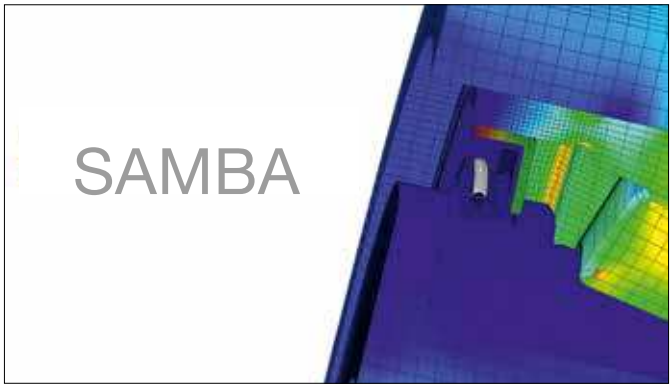

FEA Software "SAMBA" from SKF

Diagram 4

It's important to consider that a FEA simulation is a tool which needs to be used in the right way to really be of help for the product development and testing departments.

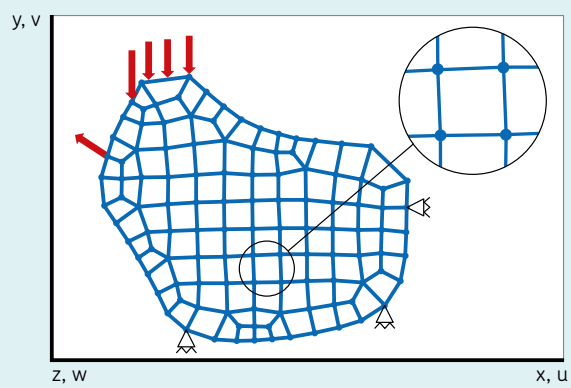

Body divided into finite elements called FE mesh

FEA Simulation

Simulation

Input → **Calculation** → **Result**

In the input phase the engineer feeds the tool with all data that shall be considered for the calculation.

Typical input:

- Models of deformable and rigid components with a suitable mesh
- Interactions and degrees of freedom
- Boundary conditions, loads, pressures, forces, movements and temperatures
- Time and the correct sequence of steps
- The right material data for the component
- Establishment of non-linear material models, especially for elastomeric materials, is key for reliable simulations. Preferably visco-elastic models should be applied for long-term prediction of contact force and strain. SKF uses extensive characterisation methods to establish accurate and close-to-reality models for its own materials

The software tool (→ **figure 30**) is solving the equations based on the provided input.

It's important to know the available tools and chose the most fitting one for the task.

Both SealDesigner and SAMBA are SKF-developed software tools to perform FEA calculations but they serve a different purpose to solve another kind of problem.

The output provided depends on the tool which has been used to perform the calculation.

Usually the results are values for strain and stress as well as element deformations and movements. Modern tools allow a colourful graphical representation of the output but still this is just a visualisation of vectors and values and requires the human mind to process the result, make sense of it and use it to understand and improve the system (→ **figure 31**).

Fig. 30

Seal Designer

SAMBA Quick

SAMBA

FEA Software from SKF

Fig. 31

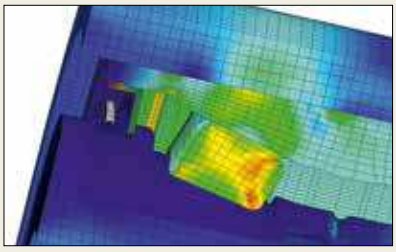

FEA is used to simulate the impact of operating conditions, material selection and seal design on seal behaviour.

Machined seals concept (MSC)

Customized sealing solutions

Manufacturing flexibility

Whether you need a single seal or a high-volume production run, SKF can support your needs. Our flexible seal production model combines moulded and machined manufacturing capabilities to accommodate virtually any demand.

With competencies in compression, injection and transfer moulding technologies, SKF can apply the most appropriate option for your requirements. With the machined seals concept, we are also able to provide machined seals very quickly, without tooling costs.

Meeting unique sealing demands, on-demand

The machined seals concept provides a fast, flexible alternative to moulded seal production. With a unique combination of capabilities, we can deliver polymeric seals in a very short time, in almost any dimension and any design, for virtually any industrial application.

The machined seals concept combines several SKF strengths, including extensive application engineering support, a wide selection of seal profiles and materials, and worldwide availability. Together, these capabilities enable on-demand manufacturing for everything from a single seal to a low-volume series for fluid power, fluid handling and power transmission applications.

Application engineering support

We begin with a consultative process through which our engineers gain an understanding of your particular sealing application challenges. Once we determine your unique requirements, we can develop a solution, choosing from the most appropriate seal profiles and materials.

Profile and materials selection

We select your seal profiles from an array of designs that are pre-programmed in our proprietary machining system, or we can work with you to design a fully customized profile. Our engineers will also determine the optimum sealing material. Our world-class range of standard and special-grade machinable sealing materials includes many that comply with FDA, NSF, NORSOK, NACE, EU1935 and other key industry standards and government regulations.

CNC manufacturing process

Featuring proprietary software and high-precision cutting tools, the SKF SEAL JET manufacturing system uses Computer Numerical Control (CNC) technology to machine polymeric seals quickly. The system machines a seal from a semi-finished tube of your specially selected materials.

Rapid delivery worldwide

The machined seals concept and related services are available globally at selected SKF Solution Factories and machined seals centres. Strategically positioned throughout the world's major industrial markets, these facilities enable rapid manufacturing and delivery.

Sealproduction – SKF machine seals


SKF

A Radial shaft seals

Radial shaft seals – general

Radial shaft seals are used between rotating and stationary machine components or between two components in relative motion and consist of two main parts:

- A cylindrical outer covering of sheet steel (case) or an elastomer that has the requisite interference fit to seal statically against the housing bore.
- A sealing lip made of an elastomeric or thermoplastic material that seals dynamically and statically against the shaft. The lip has a sealing edge that is formed by moulding, cutting or grinding. It is normally pressed against the counterface surface of the shaft, with a defined radial load, by a garter spring. The edge of the sealing lip and the shaft counterface surface form the most important functional area of a radial shaft seal. The sealing effect of the lip can be enhanced by designing the contact area of the lip with hydrodynamic features.

Some radial shaft seal designs have an auxiliary lip that protects the primary sealing lip from dust and other contaminants. A suitable lubricant in the space between the primary sealing lip and the auxiliary lip can reduce wear and delay corrosion. Contaminants that have passed the auxiliary lip will eventually cause damage in the counterface surface area. A build-up of heat can also occur between the two lips, resulting in premature wear.

Radial shaft seals are used in a multitude of applications. Because of the importance of radial shaft seals for the operational reliability and service life of machines and equipment, both seal manufacturers and users are equally interested, to some degree, in standardization. This has led to the establishment of national and international standards and guidelines listed in **table 1** on **page 64**. These cover boundary dimensions, tolerances, material specifications, test methods and terminology as well as the basic outside diameter constructions and sealing lip arrangements.

See **figs. 1** and **2** on **page 63** for the terminology used in this publication.

Fig. 1

Metal-cased seal with spring-loaded sealing lip

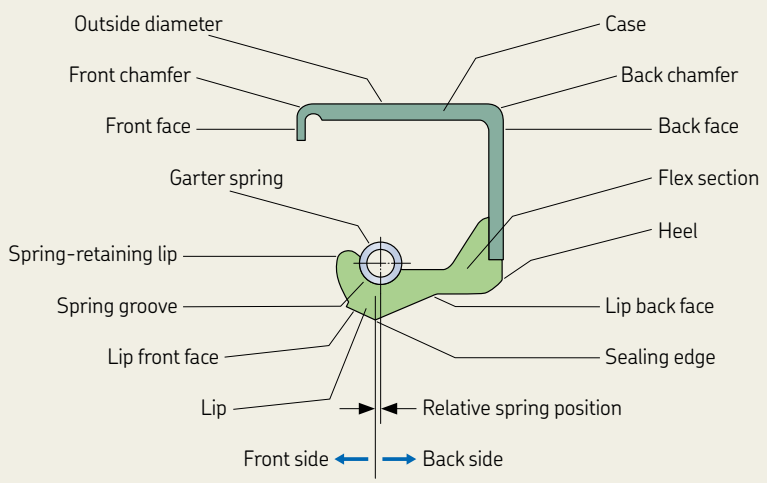

Fig. 2

Rubber outside diameter seal with spring-loaded sealing lip and auxiliary lip

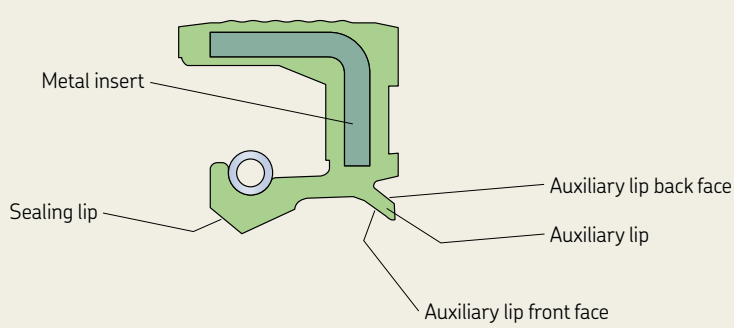

Table 1

Standards and other documents relating to radial shaft seals

Document[1)]	Title
ISO 2230	Rubber products – guidelines for storage
ISO 6194-1	Rotary shaft lip-type seals – Nominal dimensions and tolerances
ISO 6194-2	Rotary shaft lip-type seals – Vocabulary
ISO 6194-3	Rotary shaft lip-type seals – Storage, handling and installation
ISO 6194-4	Rotary shaft lip-type seals – Performance test procedures
ISO 6194-5	Rotary shaft lip-type seals – Identification of visual imperfections
SAE J946	Application guide to radial lip seals
RMA OS-1-1	Shaft requirements for rotary shaft seals
RMA OS-4	Application guide for radial lip type shaft seals
RMA OS-7	Storage and handling guide for radial lip type shaft seals
RMA OS-8	Visual variations guide for rotating shaft seals
DIN 3760	Radial-Wellendichtringe (Radial shaft seals)
DIN 3761	Radial-Wellendichtringe für Kraftfahrzeuge (Radial shaft seals for motor vehicles), Parts 1 to 15. This standard covers all aspects including vocabulary, material requirements and test methods.
DIN 7172	Tolerances and limit deviations for sizes above 3 150 mm up to 10 000 mm.
DIN 7716	Rubber products; requirements for storage, cleaning and maintenance.

1) RMA = Rubber Manufacturers Association
SAE = Society of Automotive Engineers
ISO = International Organization for Standardization
DIN = Deutsches Institut für Normung

Outside diameter design

The standard assortment of radial shaft seals manufactured by SKF for general industrial applications covers three different outside diameter executions (→ **figs. 3a** to **3c**).

Seals with a rubber outside diameter (→ **fig. 3a**) are used in a wide range of applications. They maintain a tight fit in the housing bore when the housing material has a higher coefficient of thermal expansion than steel and / or when the housing is split. They are also recommended in all applications where the housing bore surface finish requirements cannot be met.

Metal-cased seals (→ **fig. 3b**) are multi-purpose seals that can be used for most applications. They are relatively easy to install and, provided the housing bore meets the requirements, will fit tightly and centrically in the housing bore.

Radial shaft seals designed with a metal case and a secondary reinforcement in the side face (→ **fig. 3c**) offer advantages where operating conditions are severe. They have a higher radial stiffness and are available for shaft diameters ≥ 50 mm *(2 in)*.

Besides these standard outside diameter designs, there is also a half rubber / half metal outside diameter design (→ **fig. 3d**) that is typically used in automotive applications.

In addition to the seal designs for general industrial applications described above, SKF also manufactures seals for heavy industrial applications with special features to meet specific requirements (→ **page 172**).

Fig. 3

Outside diameter designs

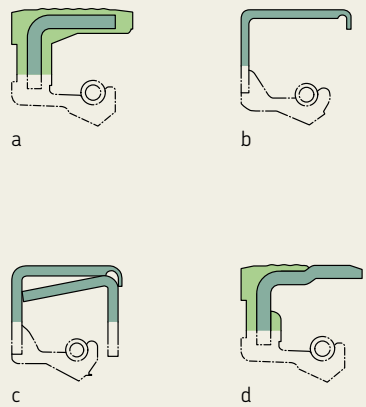

SKF Bore Tite Coating

As the static sealing ability between a metal outside diameter and the housing bore is somewhat limited, particularly in the case of low-viscosity fluids and media that can "creep", most SKF seals with a metal case feature SKF Bore Tite Coating, a water-based acrylic sealant. SKF Bore Tite Coating is green in colour, does not harden and serves to fill small imperfections in the housing bore. For additional details, refer to **page 31**.

Garter springs

SKF radial shaft seals have garter springs made of drawn carbon steel or stainless steel spring wire. Carbon steel springs are standard unless otherwise specified.

Dimensions

SKF radial shaft seals are manufactured for a wide range of shaft diameters, from 5 to 4 600 mm *(0.2 to 181 in)*. The range also includes standard sizes in accordance with ISO 6194-1 and DIN 3760 for shafts ranging from 6 to 500 mm *(0.24 to 19.7 in)*.

Tolerances

SKF radial shaft seals are generally manufactured to the outside diameter tolerances listed in **table 2** on **page 67**, for metric seals, and **table 3** on **page 67** for inch-size seals. These are, where standardized, in accordance with ISO 6194-1, DIN 3760 and RMA OS-4.

Table 2

Outside diameter tolerances for metric seals

Nominal seal outside diameter		Seals with outside diameter of steel		elastomer[1]	
D		Seal outside diameter tolerance		Seal outside diameter tolerance	
over	incl.	high	low	high	low
mm		mm		mm	
	50	+0,20	+0,08	+0,30	+0,15
50	**80**	+0,23	+0,09	+0,35	+0,20
80	**120**	+0,25	+0,10	+0,35	+0,20
120	**180**	+0,28	+0,12	+0,45	+0,25
180	**300**	+0,35	+0,15	+0,45	+0,25
300	**500**	+0,45	+0,20	+0,55	+0,30
500	**630**	+0,50	+0,22	–	–
630	**800**	+0,50	+0,24	–	–
800	**1 000**	+0,55	+0,25	–	–
1 000	**1 250**	+0,60	+0,27	–	–
1 250	**1 600**	+0,65	+0,30	–	–

1) Seals with beaded outside diameter require different tolerances. Contact SKF for sizes outside the listed range.

Table 3

Outside diameter tolerances for inch-size seals

Bore diameter[1]			Seals with outside diameter of steel		elastomer	
D		Tolerance	Nominal seal outside diameter	Seal outside diameter tolerance	Nominal seal outside diameter	Seal outside diameter tolerance
over	incl.					
in			in		in	
	2.000	±0.001	+0.005	±0.002	+0.008	±0.003
2.000	**3.000**	±0.001	+0.0055	±0.0025	+0.01	±0.003
3.000	**4.000**	±0.0015	+0.0065	±0.003	+0.0105	±0.003
4.000	**5.000**	±0.0015	+0.0065	±0.003	+0.0105	±0.003
5.000	**7.000**	±0.0015	+0.007	±0.003	+0.012	±0.004
7.000	**9.000**	±0.002	+0.0085	±0.0035	+0.0125	±0.004
9.000	**10.000**	±0.002	+0.0085	±0.0035	+0.0125	±0.004

1) Housing bores made of material other than steel may need a different nominal press-fit tolerance due to differences in thermal coefficients of expansion. Contact SKF for sizes outside the listed range.

Sealing lip design

Fig. 4

Conventional sealing lip with straight edge

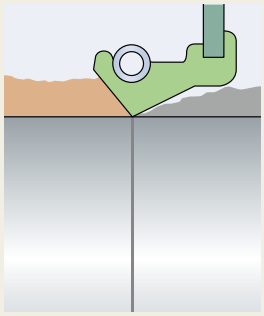

Fig. 5

SKF Wave sealing lip with sinusoidal sealing lip edge

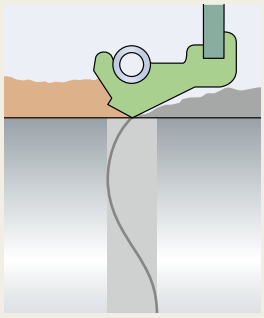

The form and design of a sealing lip is based on knowledge gained through research and development activities as well as wide practical experience obtained by SKF in close cooperation with users. The distance between the lip and the seal back face, the strength of the flex section, the angle of the lip (→ **fig. 1** on **page 63**) and the tension in the spring are all balanced so that the pressure applied by the garter spring provides a satisfactory sealing performance between the sealing lip and counterface.

The sealing lips of SKF radial shaft seals are manufactured from several materials and two different main designs. The various materials are described on **pages 31** to **33**. There are two main sealing lip designs that differ in the execution of the sealing lip edge. The "conventional" sealing lip (→ **fig. 4**) has a straight edge, whereas the SKF Wave lips (→ **fig. 5**) are moulded with a hydrodynamic feature that results in the lip taking a sinusoidal path on its counterface surface.

SKF Wave seals represent one of the most important developments in radial shaft seals. The sealing lip is moulded to a special form, producing a relative movement on the counterface, imparting hydrodynamic properties. SKF Wave seals are suitable for rotation in both directions. They pump the lubricant back into the bearing arrangement and expel contaminants. The sinusoidal form of the sealing lip considerably extends the path (→ **fig. 5**) on the counterface surface and at the same time reduces the specific surface pressure at the sealing lip / counterface contact.

As a consequence, SKF Wave seals produce up to 20% less friction resulting in up to 30% lower temperatures than conventional lip designs (→ **diagrams 1** and **2** on **page 69**). Reduced friction and the sinusoidal path of the sealing lips help prevent the formation of deep tracks in the counterface, resulting in significantly extended service life. SKF Wave seals are recommended where demands for operational reliability and long service life for machines and equipment are high.

SKF seals with conventional spring-loaded sealing lips meet general demands because they are able to provide efficient sealing even under unfavourable operating conditions. To improve sealing performance, some SKF radial shaft seals are designed with hydrodynamic features on the sealing lip. These have either a right-hand twist for shafts that rotate clockwise, or a left-hand twist for shafts that rotate counter-clockwise as seen from the air side. The degree to which the hydrodynamic feature improves the sealing ability depends on the form of the spiral flutes, the circumferential speed, the pressure conditions and the media being sealed. See also paragraph *Oil retention* on **page 21**.

Diagram 1

Temperature rise at sealing lip / counterface contact for conventional and SKF Wave lips as a function of rotational speed for a 76 mm diameter shaft with SAE 30 engine oil

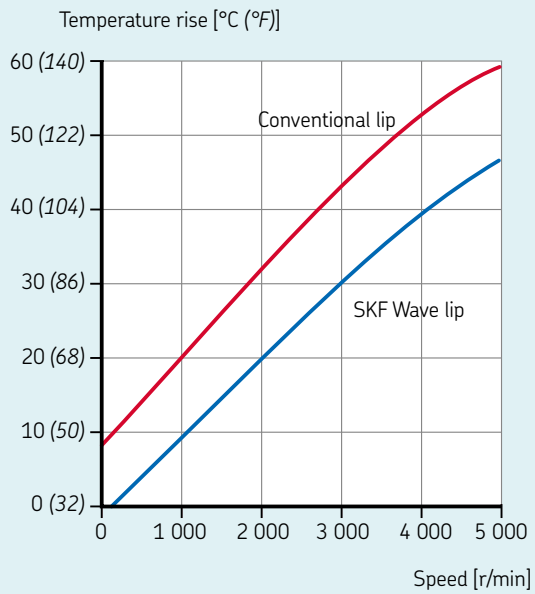

Diagram 2

Frictional moment at sealing lip / counterface contact for conventional and SKF Wave lips as a function of rotational speed for a 76 mm diameter shaft with SAE 30 engine oil

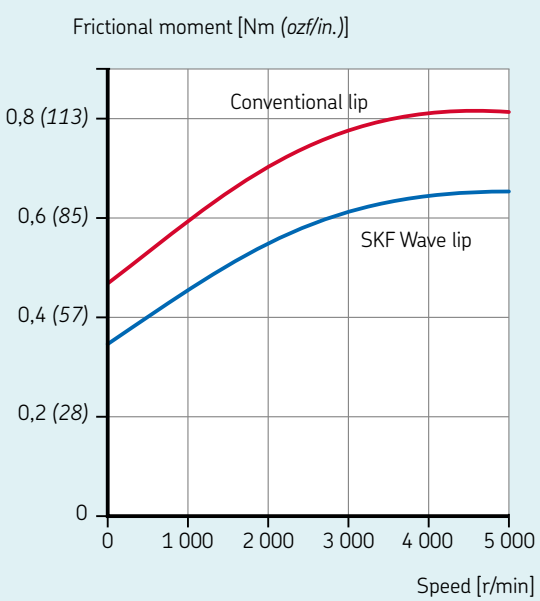

Auxiliary lips

SKF radial shaft seals can also be designed with an auxiliary lip for increased protection against contaminants (→ **fig. 2** on **page 63**). These auxiliary lips are either contacting or non-contacting. Seal designs that incorporate contacting auxiliary lips are used in heavily contaminated environments, with the drawback, however, of creating increased friction and elevated underlip temperatures. The auxiliary lip of HMSA10 and CRWA1 / CRWHA1 seals is non-contacting, which means that these designs normally can be used at the same speeds as the single-lip designs HMS5 and CRW1 / CRWH1.

Coaxiality and runout

Deviation from coaxiality and dynamic runout of the shaft are two of many operating parameters that affect seal performance and service life. They should therefore be kept within narrow limits, particularly when there is a pressure differential across the seal. The total deviation should never exceed 1,3 times the value of the permissible deviation from coaxiality.

Coaxiality

Deviations from coaxiality, i.e. the difference between the centre lines of the shaft and housing bore (shaft-to-bore misalignment, STBM), cause force to be distributed irregularly on the sealing lip (→ **fig. 6**). This means that one section of the sealing lip will be subjected to more force, causing an enlargement of the contact area between lip and counterface surface, whereas the opposite section will be correspondingly unloaded and its sealing effect reduced. Guideline values for the permissible coaxiality deviations for SKF seals can be obtained from **diagram 3** on **page 71**.

Fig. 6

Coaxiality

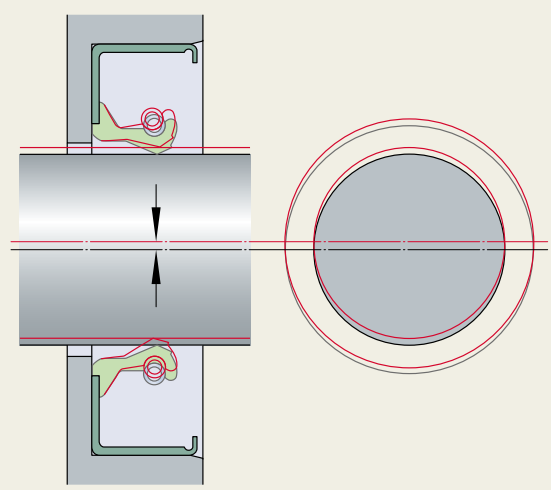

Diagram 3

Maximum permissible deviation from coaxiality as a function of shaft diameter

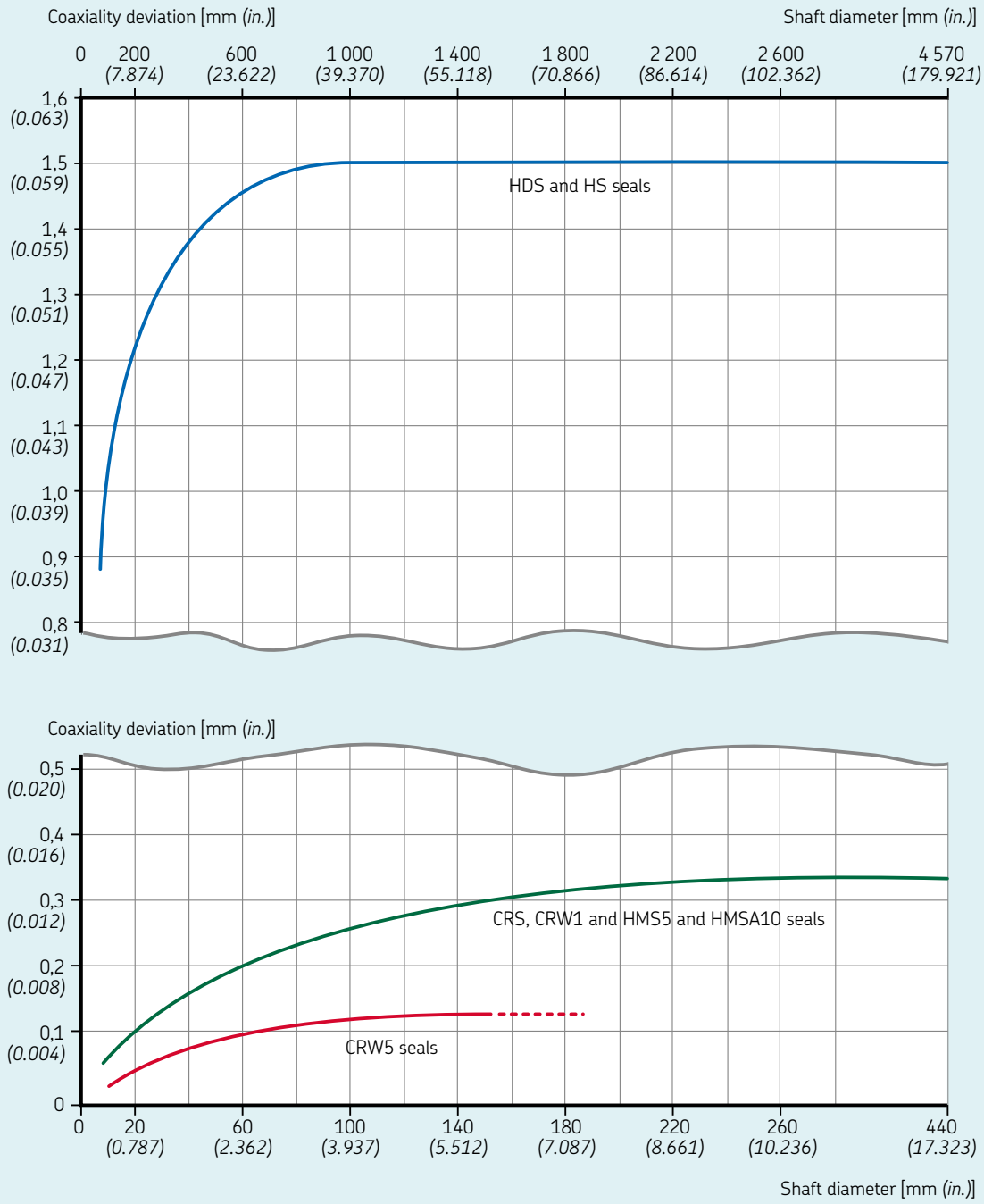

Runout

Runout (or dynamic runout, DRO) describes the dynamic eccentricity of the shaft. Particularly at high speeds, there is a risk that the sealing lip, because of its inertia, will not be able to follow the shaft surface (→ **fig. 7**). If the eccentricity is such that the distance between the sealing lip and shaft becomes larger than that required to maintain a hydrodynamic lubricant film, the medium to be sealed will escape through the gap. It is therefore advisable to arrange the seal in close proximity to the bearing and to keep bearing operating clearance to a minimum.

Permissible runout values can be obtained from **diagram 4** on **page 73**. These values are normally lower for narrow seals and always depends on seal cross section, sealing lip material and operating temperature.

Fig. 7

Runout

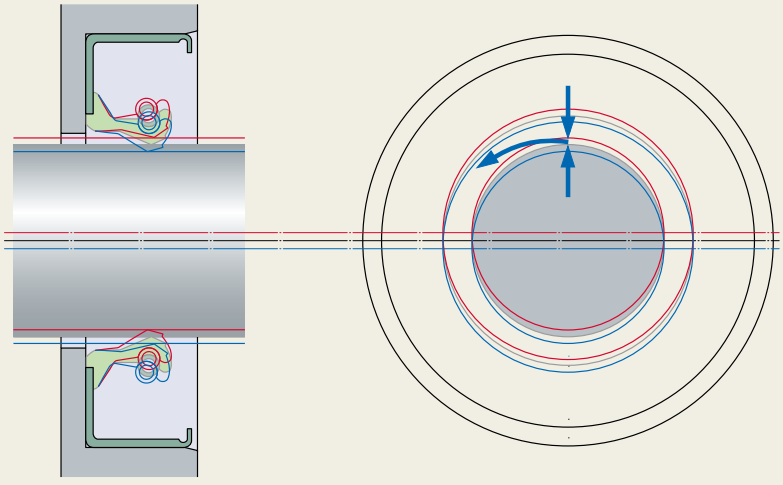

Diagram 4

Maximum permissible runout as a function of rotational speed

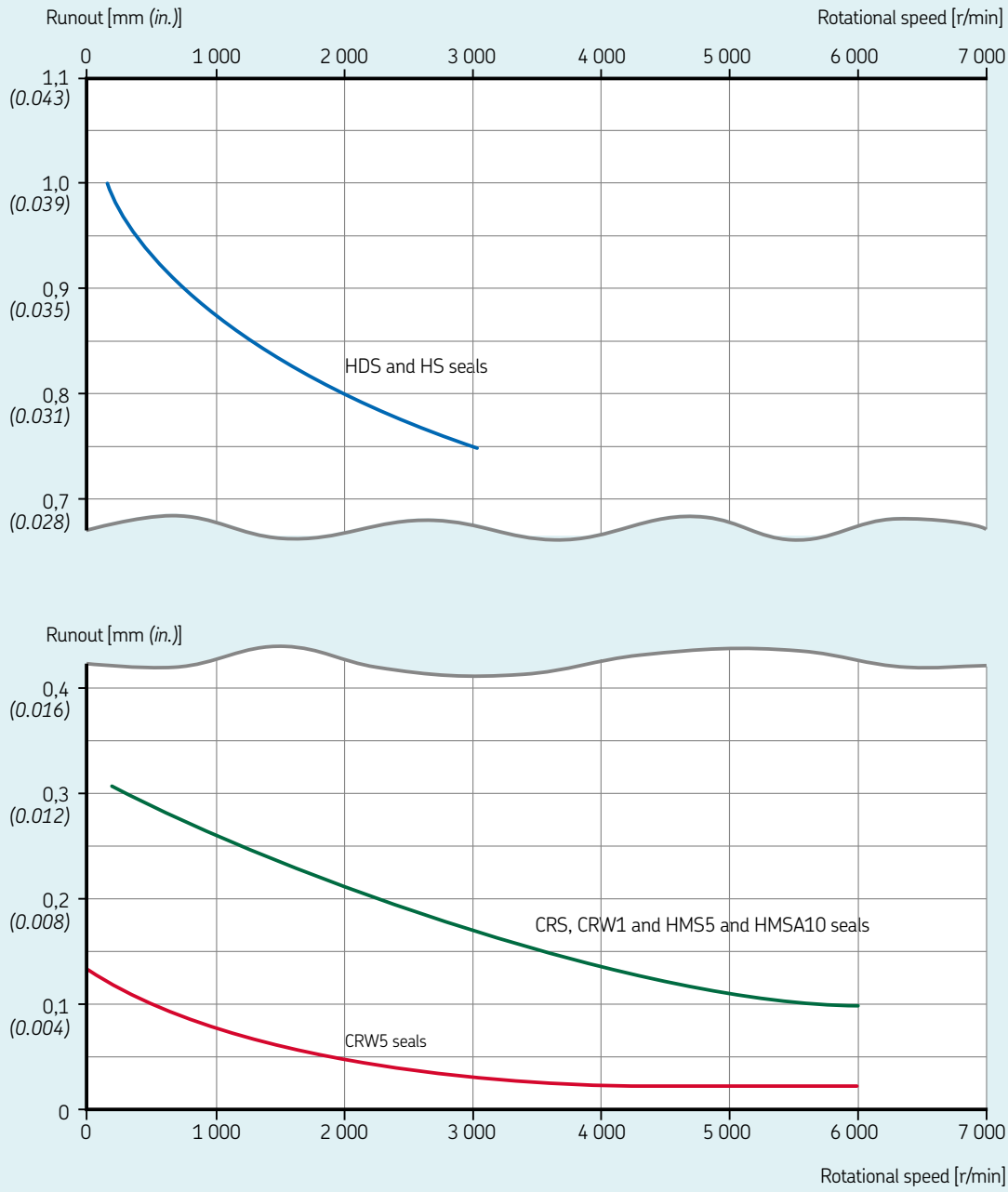

Axial movement

Small movements of the shaft relative to the housing in the axial direction do not affect seal performance, provided that the total counterface surface meets the same demands regarding to hardness, accuracy and surface finish.

Permissible speeds

Guideline values for the permissible rotational and circumferential speeds for different seal designs are provided in the seal selection charts (**matrix 2** on **pages 176** to **183**). If the circumferential speeds provided in the matrix are not sufficient for a particular sealing position, **diagram 5** from DIN 3760 on **page 75** may be used. The diagram lists circumferential and rotational speeds related to the material of the sealing lip. The values are valid for spring-loaded sealing lips that are well-lubricated by a mineral oil, where adequate lubricant supply prevents heat build-up and where the pressure is the same on both sides of the seal (pressure differential = 0).

Diagram 5 on **page 75** shows that large diameter shafts can accommodate higher circumferential speeds than shafts with smaller diameters. This is because the cross section of the shaft does not increase linearly with the increase in diameter but by the square of the increase in diameter. Therefore, the heat dissipation of a large shaft is much better than that of a small shaft.

Generally, SKF Wave seals can be operated at higher circumferential speeds than those obtained from **diagram 5** on **page 75** because of the hydrodynamic form of the lip.

The values obtained from **diagram 5** on **page 75** should be reduced if

- radial shaft seals with an auxiliary, contacting lip are used,
- lubrication is inadequate or grease lubrication is used, i.e. when underlip temperatures increase due to poor heat dissipation,
- the counterface does not meet surface finish or running accuracy requirements or
- there is a pressure differential across the seal.

Diagram 5

Permissible speeds for spring-loaded sealing lips where no pressure differential exists across seal in operation
For permissible speeds for seals at shaft diameters > 200 mm, refer to seal selection chart starting on page 104.

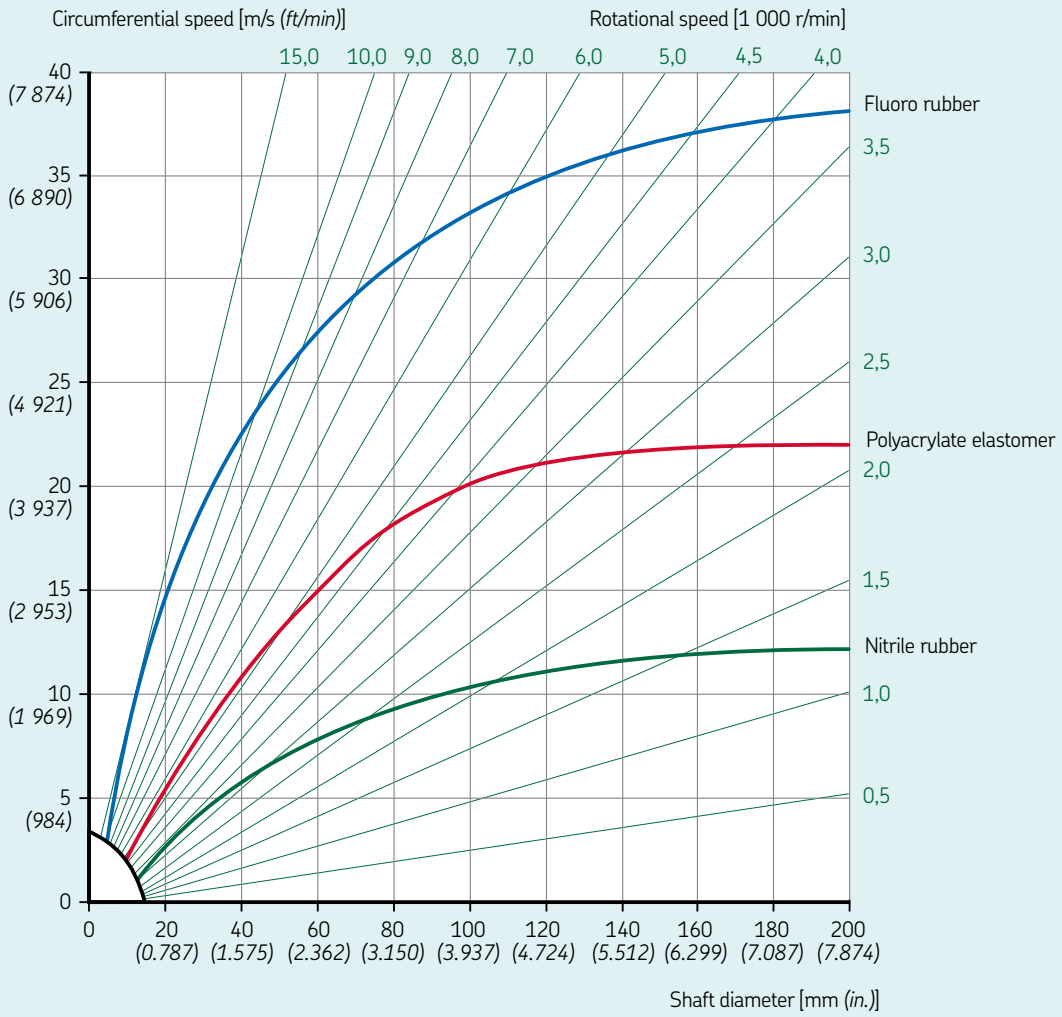

Source: DIN standard 3760

Lubrication

To seal efficiently over a long period, the sealing lip of a radial shaft seal must be lubricated. This reduces friction and wear to the sealing lip and shaft. Dry running of sealing lips made of standard materials should always be avoided. To prevent dry running, coat the counterface surface with a suitable lubricant prior to seal installation.

The lubricant not only lubricates the sealing lip to reduce friction and wear, but also dissipates heat generated by the seal. To promote heat dissipation, a sufficient quantity of lubricant needs to reach the sealing lip from start-up.

Some rolling bearings, such as angular contact ball bearings, tapered roller bearings and spherical roller thrust bearings, as well as gears, create a pumping action by virtue of their design. This means that the sealing lip can either be starved of lubricant, or subjected to excessive quantities of lubricant. In either case, steps must be taken during the design stage to make sure that the proper amount of lubricant reaches the sealing lip, as too much or too little can affect seal performance.

To prevent lubricant starvation, lubrication ducts can be provided. If the seal is subjected to excessive amounts of lubricant, a flinger can be installed between the bearing and the seal.

In applications where the sealing lip is not exposed to a lubricant, for example when two seals are installed in tandem, grease or oil must be separately supplied to provide sufficient lip lubrication. In some cases, it may be sufficient to provide an initial grease fill between the two lips.

Lubrication of paired arrangements

When two radial shaft seals are installed back-to-back or in tandem, the space between the seals should be filled with a suitable lubricant to eliminate the risk of the sealing lip running dry.

To further prevent dry running, a spacing washer between the seals can also be used. This spacing washer should be provided with lubrication holes or an annular groove and lubrication holes so that grease can be supplied to the space between the seals via a grease fitting (→ **fig. 8**).

Fig. 8

Lubrication of a paired arrangement

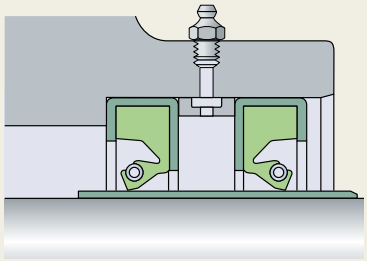

Friction

To be effective, the lip of a radial shaft seal must always exert a certain radial load on the counterface. The friction resulting from this radial load is only part of the total contact friction and power loss at the sealing position. Other contributing factors include:

- Type of medium being sealed
- Pressure differential across the seal
- Circumferential speed
- Ambient temperature
- Lubricant and lubrication method
- Condition of the counterface
- Sealing material
- Lip surface roughness
- Shaft roughness

Diagram 6 on **page 77** provides an indication of the friction losses that may be expected when a radial shaft seal with a conventional sealing lip is properly installed and fully lubricated.

The running-in phase of the sealing lip lasts a few hours. During this time, the friction losses are somewhat higher than during normal operation.

Seals intended for applications with high pressure differentials typically have greater losses than specified in the diagram. SKF Wave seals, on the other hand, typically have losses lower than those indicated in the diagram.

Diagram 6

Friction losses of radial shaft seals as a function of rotational speed and shaft diameter

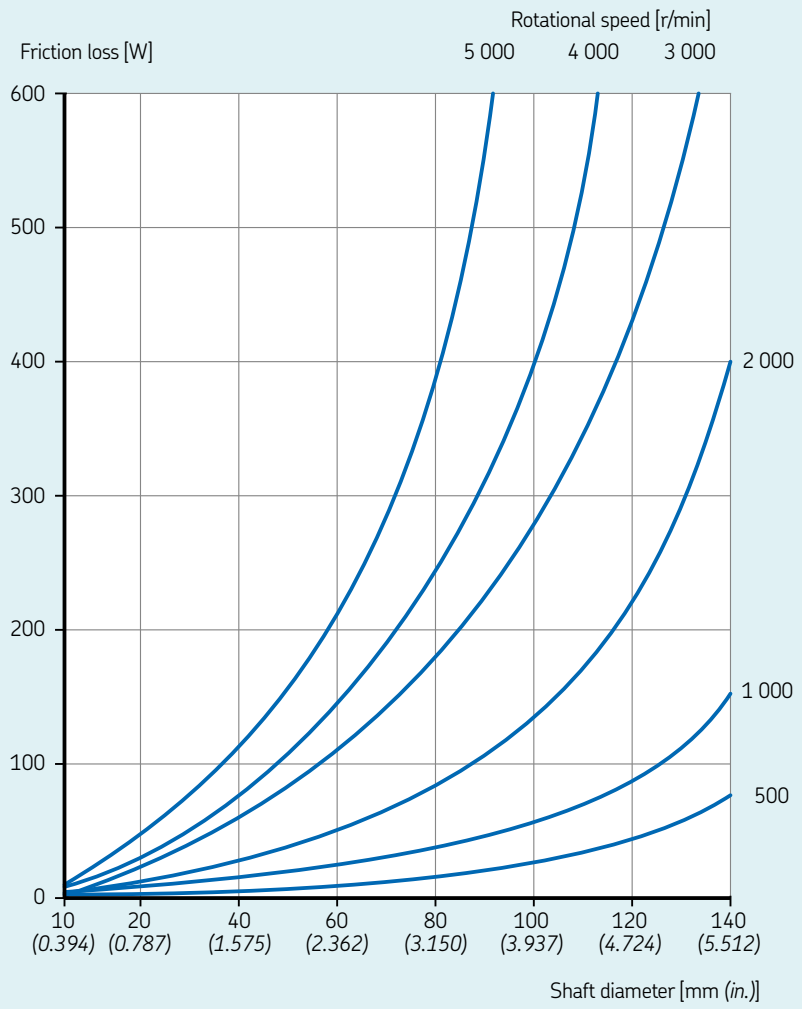

Chemical and thermal resistance

The most important factor when selecting the appropriate elastomer for a radial shaft seal is its chemical resistance to the medium to be sealed or excluded. The operating temperature is another important factor. Heat accelerates ageing of the elastomer and increases the reactivity and aggressiveness of the sealed medium.

Radial shaft seals are mainly used to seal lubricating oils and greases as well as hydraulic fluids (including non-flammable fluids). Guideline values are provided in **table 4** for the permissible operating temperatures, i.e. temperatures at which the SKF seals are still chemically resistant. The temperature range stated for a group of media means that the sealing material is resistant when continuously operated within this particular range.

The ☐ means that, within the group, there are some media that are compatible with the elastomer, but also some that have a detrimental effect on the elastomer.

The ■ means that the seal material is not resistant to media belonging to this group.

For the resistance of sealing materials to media not listed in **table 4**, refer to the section *Chemical resistance* (**→ page 36**) or contact SKF.

Table 4

Chemical and thermal resistance, radial shaft sealing lip materials

Medium to be sealed	**Permissible operating temperatures (continuous) for SKF radial shaft sealing lip materials**[1]							
	R (NBR)		P (ACM)		S (MVQ)		V (FKM)	
–	°C	*°F*	°C	*°F*	°C	*°F*	°C	*°F*
Mineral oil based lubricants								
Motor oils	100	*210*	130	*270*	150	*300*	170	*340*
Gear oils	80	*175*	120	*250*	130	*250*	150	*300*
Hypoid gear oils	80	*175*	120	*250*	■		150	*300*
Automatic transmission fluids (ATF oils)	100	*210*	130	*270*	☐		170	*340*
Greases	90	*195*	☐		☐		☐	
Hydraulic fluids	90	*195*	120	*250*	☐		150	300
Fire-resistant hydraulic fluids								
Oil in water emulsions and aqueous polymer solutions	70	*160*	■		60	*140*	☐	
Anhydrous fluids	■		■		■		150	*300*
Other media								
Fuel oils EL and L	90	*195*	☐		■		N	
Water	90	*195*	■		■		100	*210*
Alkaline washing solutions	90	*195*	■		■		100	*210*
Permissible temperature range								
for sealing lip min.:	–40	*–40*	–40	*–40*	–60	*–75*	–40	*–40*
max.:	+100	*+210*	+150	*+300*	+160	*+320*	+200	*+390*

■ Lip material not resistant
☐ Lip material not resistant to some media in this group

[1] R = nitrile rubber
P = polyacrylate elastomer
S = silicone rubber
V = fluoro rubber

Seals under pressure

When a seal is exposed to pressure, the radial load of the sealing lip increases. This in turn increases the actual sealing lip / shaft contact area, resulting in additional friction and elevated underlip temperatures. Therefore, the guideline values for speeds provided in **diagram 5** on **page 75** do not apply.

Diagram 7 shows an example of lip distortion of a conventional sealing lip design. System pressure pushes the sealing lip onto the counterface and this leads to sealing lip distortion and increased radial force. This results in higher friction, more frictional heat and consequentially reduced seal service life.

SKF CRW5 and CRWA5 pressure profile seals (→ **fig. 9**) are designed to withstand pressure differentials of 0,34 MPa (*50 psi*) at speeds up to 5 m/s (*1 000 ft/min*).

When there is a pressure differential across the seal, a shoulder or retaining ring should be used at the low-pressure side of the seal to prevent it from being pressed out of the housing bore (→ **fig. 10**).

Fig. 9

Pressure profile seals

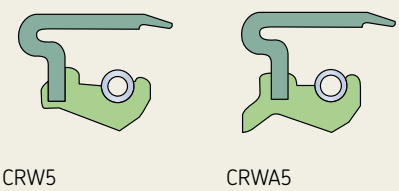

Fig. 10

CRWA5 seal

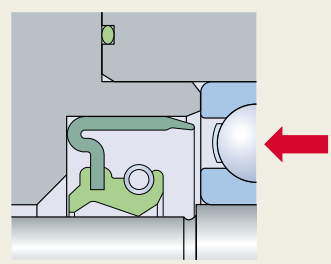

Diagram 7

System pressure pushes the sealing lip onto the counterface and leads to sealing lip distorion and increased radial force. This results in higher friction, more frictional heat and – consequentially – reduced seal service life.

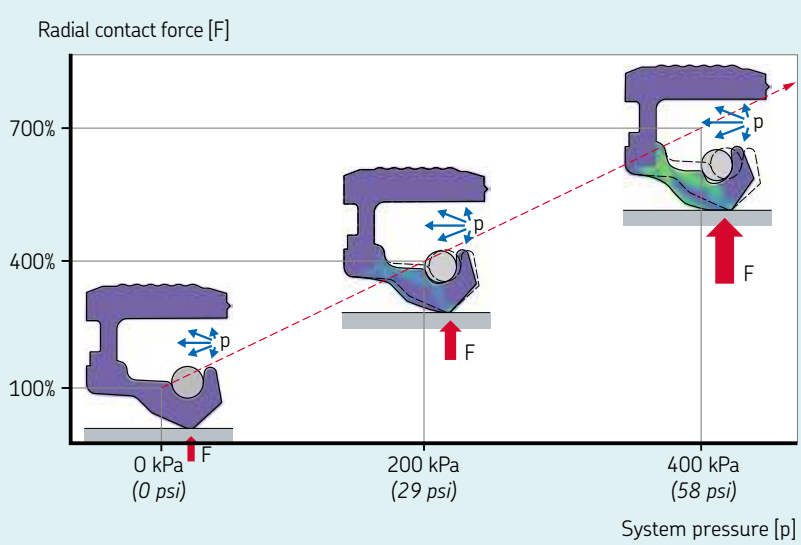

Shaft requirements

General

To achieve reliable sealing performance and maximum service life, the counterface for a radial shaft seal should meet the requirements outlined below. The seal counterface must be able to accommodate all permissible deviations and movements – surface SL and an additional surface SL' – which may be required in the case of repairs or inspection (→ **fig. 11**).

In cases where a shaft cannot be machined to meet the requirements, SKF recommends the use of SKF Speedi-Sleeve or a wear sleeve for heavy industrial applications (LDSLV). Detailed information about sleeves is provided in the chapter Wear sleeves starting on **page 232**.

Tolerances

The diameter of the shaft d1 at the counterface should be machined to the tolerances provided in **table 6** on **page 81** for metric shafts and **table 7** on **page 81** for inch-size shafts.

Out-of-roundness must be less than 0,005 mm *(0.0002 in)* at a maximum of 2 lobes or less than 0,0025 mm *(0.0001 in)* at a maximum of 7 lobes.

If components with an interference fit will pass over the counterface during installation, the shaft diameter should be reduced by 0,2 mm *(0.008 in)*.

Surface roughness

The surface roughness values of the counterface for radial shaft seals, calculated according to methods described in ISO 4288 (DIN 4768), should be kept within the limits specified in RMA OS-1-1 (→ **table 5**).

The lower value for R_a is a minimum value. Using a lower value will adversely affect the lubricant supply to the sealing lip. The temperature rise caused by inadequate lubrication, particularly at high circumferential speeds, can lead to hardening and cracking of the sealing lip which will eventually lead to premature seal failure. If the counterface is too rough, there will be excessive sealing lip wear and seal service life will be shortened. If the value R_{pm} is exceeded, the seal will leak or excessive sealing lip wear may occur.

Fig. 11

Counterface for radial shaft seals

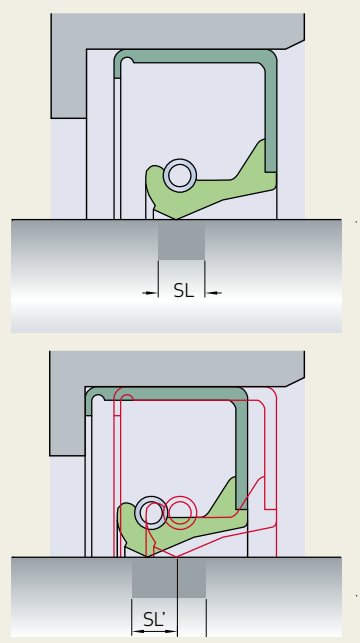

Table 5

Recommended shaft surface roughness values

	ISO		DIN		RMA	
	µm	*µin*	µm	*µin*	µm	*µin*
R_a	0,2–0,5	*8–20*	0,2–0,8	*8–32*	0,2–0,43	*8–17*
R_z	1,2–3	*48–120*	1–5	*40–200*	1,65–2,9	*65–115*
R_{pm}	N/A	*N/A*	N/A	*N/A*	0,5–1,5	*20–50*

Surface finish

Depending on the direction of rotation, directionality on the seal counterface may cause a seal to leak. Plunge grinding is the preferred machining method to minimize directionality (0±0,05°) on the seal counterface. When plunge grinding, whole number ratios of the grinding wheel speed to the work piece speed should be avoided. Run the grinding wheel until it "sparks out" completely, i.e. until there are no more sparks flying from the wheel, to ensure that all lead is removed. The grinding wheel should be dressed using a cluster head dressing tool and the smallest possible lateral feed, or a profile dressing roll without lateral feed. The negative influence of directionality in any particular case can only be ascertained by test running under conditions of alternating rotation.

The seal counterface surface should be free of any damage, scratches, cracks, rust or burrs and should be properly protected until final installation.

Hardness and surface treatment

The surface hardness of the seal counterface should be at least 30 HRC (58 HRC for PTFE lip seals). If the counterface surface could be damaged during transport or installation, this value should be increased to 45 HRC (62 HRC for PTFE lip seals). Under certain conditions, where speeds are low, lubrication is good and contaminants are absent, counterface surfaces having a lower hardness may be suitable. Surfaces that are nitrided, phosphated or have a galvanized coating may also be suitable, but this must be determined for each specific case.

Table 6

Counterface tolerances for metric shafts

Shaft diameter Nominal d_1 over	incl.	**Diameter tolerance (ISO h11)**[1] Deviation high	low
mm		µm	
6	**10**	0	–90
10	**18**	0	–110
18	**30**	0	–130
30	**50**	0	–160
50	**80**	0	–190
80	**120**	0	–220
120	**180**	0	–250
180	**250**	0	–290
250	**315**	0	–320
315	**400**	0	–360
400	**500**	0	–400
500	**630**	0	–440
630	**800**	0	–500
800	**1 000**	0	–560
1 000	**1 250**	0	–660
1 250	**1 600**	0	–780
1 600	**2 000**	0	–920
2 000	**2 500**	0	–1 100
2 500	**3 150**	0	–1 350
3 150	**4 000**	0	–1 650
4 000	**5 000**	0	–2 000

[1] For shaft diameters of 3 150 mm and above, refer to DIN 7172.

Table 7

Counterface tolerances for inch-size shafts

Shaft diameter Nominal d_1 over	incl.	**Diameter tolerance (RMA OS-4)** Deviation high	low
in		in	
–	**4**	+0.003	–0.003
4	**6**	+0.004	–0.004
6	**10**	+0.005	–0.005
10		+0.006	–0.006

Lead-in chamfers

To install radial shaft seals without damaging the sealing lip, SKF recommends chamfering or rounding the shaft ends or shoulders (→ **table 8**).

If the direction of installation is Z, the values ($d_1 - d_2$) provided in table 8 should be adhered to. If the direction of installation is Y, the shaft end could be either rounded (r) or chamfered ($d_1 - d_2$).

To install a seal over a shaft shoulder or end that has not been rounded or chamfered, SKF recommends using an installation sleeve. See section *Seal installation, heavy industrial applications* on **page 89**.

Table 8

Lead-in chamfers and radii

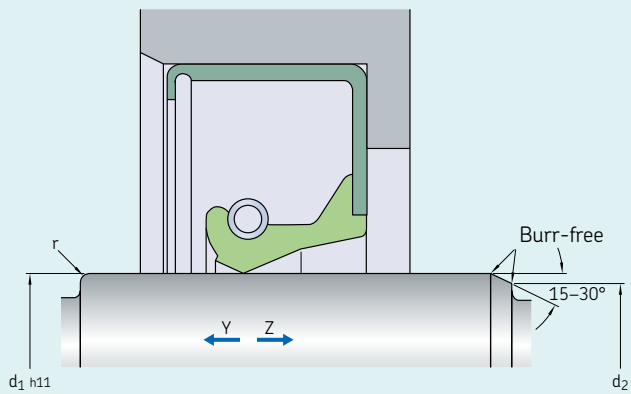

Shaft diameter Nominal d_1 over	incl.	over	incl.	**Diameter** difference[1] $d_1 - d_2$ min.		**Radii** Seal without auxiliary lip r min.		Seal with auxiliary lip r min.	
mm		*in*		mm	*in*	mm	*in*	mm	*in*
–	**10**	–	*0.394*	1,5	*0.059*	0,6	*0.024*	1	*0.039*
10	**20**	*0.394*	*0.787*	2	*0.079*	0,6	*0.024*	1	*0.039*
20	**30**	*0.787*	*1.181*	2,5	*0.098*	0,6	*0.024*	1	*0.039*
30	**40**	*1.181*	*1.575*	3	*0.118*	0,6	*0.024*	1	*0.039*
40	**50**	*1.575*	*1.968*	3,5	*0.138*	0,6	*0.024*	1	*0.039*
50	**70**	*1.968*	*2.756*	4	*0.157*	0,6	*0.024*	1	*0.039*
70	**95**	*2.756*	*3.740*	4,5	*0.177*	0,6	*0.024*	1	*0.039*
95	**130**	*3.740*	*5.118*	5,5	*0.216*	1	*0.039*	2	*0.079*
130	**240**	*5.118*	*9.449*	7	*0.276*	1	*0.039*	2	*0.079*
240	**500**	*9.449*	*19.685*	11	*0.433*	2	*0.079*	3	*0.118*
500	**–**	*19.685*	–	13	*0.512*	5	*0.197*	5	*0.197*

[1] If the corner is blended rather than chamfered, the blended section should not be smaller than the difference in diameters $d_1 - d_2$.

Housing bore requirements

General

To reduce the risk of seal damage during installation, the housing bore should have a 15 to 30° lead-in chamfer. The chamfer should be free of burrs and the transition radius r between the seal seat and shoulder should be in accordance with the recommendations in **table 10** on **page 84**.

In order to facilitate seal removal, holes in the housing shoulder A can be incorporated during the design stage.

Metal-reinforced seals

The depth of a metric housing bore B for metal-cased or metal-inserted seals should be at least 0,3 mm (*0.012 in*) larger than the nominal seal width b (→ **fig. 12**). The corresponding values for an inch housing bore B are 0,4 mm (*0.016 in*).

Seals without metal-reinforcement

Seals without metal reinforcement are manufactured oversized relative to the housing bore diameter and depth to enable proper compression and stability. The actual seal width is approximately 0,4 to 0,8 mm (*0.016 to 0.032 in*) wider than the bore depth B. For all-rubber HS seals, the bore depth tolerance should be ±0,13 mm (*0.005 in*) and ±0,10 mm (*0.004 in*) for all-rubber reinforced HSS seals and fabric-reinforced HSF seals. For seals without metal reinforcement, a cover plate is required for a proper fit (→ **page 94**).

Tolerances

The housing bore diameter D should be machined to tolerance H8 (→ **table 10** on **page 84**). Depending on the operating conditions, out-of-roundness should be 1 to 2 tolerance grades better than H8.

Surface roughness

The surface roughness (to ISO 4288 or DIN 4768) of the housing bore should be kept within the limits specified in **table 9**.

Fig. 12

Housing bore requirements

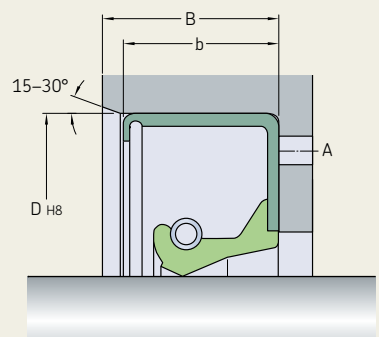

Table 9

Recommended housing bore surface roughness values

	ISO[1]		DIN		RMA[2][3]	
	µm	*µin*	µm	*µin*	µm	*µin*
R_a	1,6–3,2	*64–128*	1,6–3,2	*64–128*	1–2,5	*40–100*
R_z	6,3–12,5	*252–500*	10–20	*400–800*	N/A	*N/A*
R_{max}	N/A	*N/A*	N/A	*N/A*	0,5–1,5	*20–50*

1) ISO – The housing bore surface roughness may require lower values when metal-cased seals are used, in which case they should be subject to agreement between the manufacturer and user.
2) RMA – If the bore surface texture is greater than 2,5 µm (*100 µin*) Ra, a sealant should be used.
3) RMA – Turned bores, where a lubricant head of up to 0,20 bar (*3.0 psi*) is present at the seal. If this texture is maintained and tool removal marks or bore defects are not present, no outside diameter leakage should occur.

Table 10

Housing bore tolerances

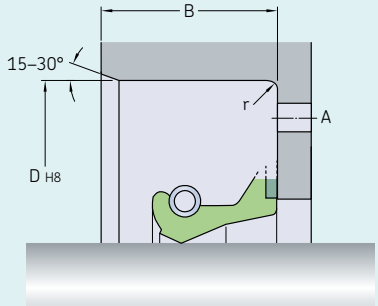

Housing bore for metric seals (ISO)

Nominal diameter D over	incl.	Housing bore tolerance (ISO tolerance H8) high	low	Fillet radii r max.
mm		µm		mm
–	**3**	+14	0	0,3
3	**6**	+18	0	0,3
6	**10**	+22	0	0,3
10	**18**	+27	0	0,3
18	**30**	+33	0	0,3
30	**50**	+39	0	0,3
50	**80**	+46	0	0,4
80	**120**	+54	0	0,8
120	**180**	+63	0	0,8
180	**250**	+72	0	0,8
250	**315**	+81	0	0,8
315	**400**	+89	0	0,8
400	**500**	+97	0	0,8
500	**630**	+110	0	0,8
630	**800**	+125	0	0,8
800	**1 000**	+140	0	0,8
1 000	**1 250**	+165	0	0,8
1 250	**1 600**	+195	0	0,8
1 600	**2 000**	+230	0	0,8
2 000	**2 500**	+280	0	0,8
2 500	**3 150**	+330	0	0,8
3 150[1]	**4 000**	+410	0	0,8
4 000[1]	**5 000**	+500	0	0,8

Housing bore for inch-size seals (RMA)

Nominal diameter D over	incl.	Housing bore tolerance high	low	Fillet radii r max.
in		in		in
–	**3.000**	+0.001	–0.001	0.031
3.000	**7.000**	+0.0015	–0.0015	0.031
7.000	**10.000**	+0.002	–0.002	0.031
10.000[2]	**12.000**	+0.002	–0.002	0.031
12.000[2]	**20.000**	+0.003	–0.003	0.031
20.000[2]	**40.000**	+0.004	–0.004	0.031
40.000[2]	**60.000**	+0.006	–0.006	0.031

[1] SKF recommended bore specifications not covered in ISO 286-2
[2] SKF recommended bore specifications not covered in RMA OS-4

Table 11

Shaft and bore requirements for HRS seals

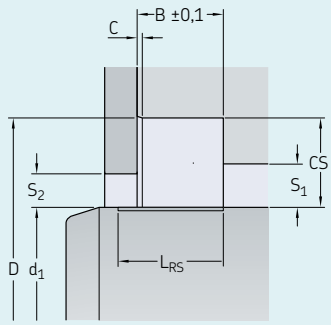

Housing bore for metric seals (ISO)

Range incl.	up to	Tol	Tol	minimum (recom-mended)	HRS1 HRSA	HRS1 +HRE		HRS1	HRSA HRE	HRS1	HRSA	+HRE	HRS1 HRSA	HRE
d_1			D	CS	B		S_1	S_2		L_{RS}			C	
mm														
350	900	–0,4	+0,4	≥ 20 (25)	≥ 20	≥ 25	≤ 12	≤ 12	7-12	≥ 15	≥ 25	≥ B + 10	≤ 10	≤ 1,5
900	1 800	–0,5	+0,5	≥ 25 (32)	≥ 25	≥ 30	≤ 16	≤ 16	7-16	≥ 15	≥ 30	≥ B + 10	≤ 10	≤ 1,5
1 800	3 900	–0,7	+0,7	≥ 28 (32)	≥ 25	≥ 30	≤ 18	≤ 18	7-18	≥ 15	≥ 30	≥ B + 10	≤ 10	≤ 1,5

Surface roughness
The surface roughness values of the counterface for these radial shaft seals, calculated according to methods described in ISO 4288 (DIN 4768), should be:

R_a ≤0.8µm
Material ratio: 50...95% at 50% of R_z, C_{ref}=0%

If higher values are used, the seal life may be affected. If the counterface is too rough, there can be excessive sealing lip wear and seal service life might be be shortened.

Surface finish
Depending on the direction of rotation, directionality on the seal counterface may cause a seal to leak. Plunge grinding is the preferred machining method to minimize directionality (0±0,05°) on the seal counterface.
The seal counterface surface should be solid, free of any damage, scratches, cracks, rust or burrs and should be properly protected until final installation.

Hardness and surface treatment
The surface hardness of the seal counterface should be at least 45 HRC. Under certain conditions, such as where speeds are low, lubrication is good and contaminants are absent, counterface surfaces having a lower hardness may be suitable. Surfaces that are nitrided, phosphated or have a galvanized coating may also be suitable, but this must be determined for each specific case.

Table 12

Housing bore requirements for HS/SS seals

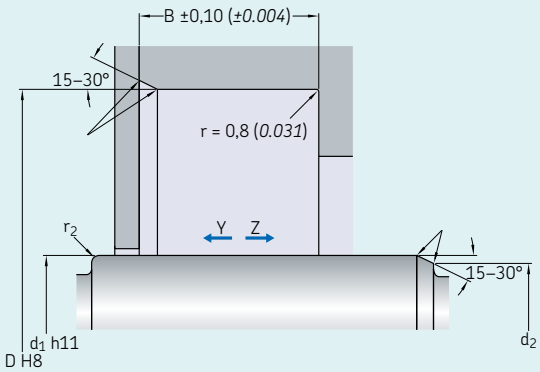

Lead-in chamfers and radii

Shaft diameter Nominal d_1 over	incl.	over	incl.	Diameter difference 1) $d_1 - d_2$ min.		Radii r_2 min.	
mm		*in*		mm	*in*	mm	*in*
165	240	*6.500*	*9.499*	7	*0.276*	1	*0.039*
240	500	*9.449*	*19.685*	11	*0.433*	2	*0.079*
500		*19.685*		13	*0.512*	5	*0.197*

1) If the corner is blended rather than chamfered, the blended section should not be smaller than the difference in diameter $d_1 - d_2$.

Lead-in chamfers
To reduce the risk of seal damage during installation, the housing bore should have a 15° to 30° lead-in chamfer. The chamfer should be free of burrs and the transition radius r between the seal seat and shoulder should be in accordance with the recommendations in **table 12.**

Tolerances
For all-rubber HSS seals, the bore depth tolerance should be 0,10 mm (*0.004 in*).

Table 13

Recommended housing bore surface roughness values

	ISO 1)		DIN		RMA 2) 3)		
	µm	*µin*	µm	*µin*	µm	*µin*	µm
R_a	1,6–3,2	*64–128*	1,6–3,2	*64–128*	1–2,5	*40–100*	0.039
R_z	6,3–12,5	*252–500*	10–20	*400–800*	N/A	*N/A*	0.079
R_{pm}	N/A	*N/A*	25	*1 000*	N/A	*N/A*	0.197

1) ISO – The housing bore surface roughness may require lower values when metal-cased seals are used, in which case they should be subject to agreement between the manufacturer and user.
2) RMA – If the bore surface texture is greater than 2,5 µm (*100 µin*) Ra, a sealant should be used.
3) RMA – Turned bores, where a lubricant head of up to 0,20 bar (*3.0 psi*) is present at the seal. If this texture is maintained and tool removal marks or bore defects are present, no outside diameter leakage should occur.

Surface roughness
The surface roughness (to ISO 4288, DIN 4768 or RMA OS-1-1) of the housing bore should be kept within the limits specified in **table 13.**

Seal installation, general industrial applications

General

To provide effective sealing, radial shaft seals must be installed properly. An experienced installer with suitable tools, working in a clean environment, is recommended to provide proper installation. The shaft counterface surface and housing bore should meet the demands specified under Shaft Housing bore requirements on **pages 83** to **86**.

To facilitate seal installation and to achieve initial lubrication, prior to installation, SKF recommends wiping the shaft and seal with the lubricant that is going to be retained. While the outside diameter of metal-cased seals can be lightly lubricated to ease installation, the outside diameter of rubber covered seals should always be lubricated.

Seals with an auxiliary, contacting lip can also be filled with grease between the sealing lip and auxiliary lip to reduce frictional moment. This does not apply to silicone rubber seals and seals with hydrodynamic features, other than SKF Wave lip designs.

SKF also recommends using a hydraulic press, with suitable tools, to install a seal in its housing bore. Pressure should be applied as close as possible to the outside diameter of the seal.

Seals that are designed to sit flush with the wall of the housing bore must be installed perpendicular to the housing bore axis. The outside diameter of the tool should be larger than the housing bore diameter (→ **fig. 13**).

When pressing seals up against a shoulder or retaining ring, it is advisable to use tools of the type shown in **figs. 14** and **15**. The necessary ring dimensions can be supplied on request.

Fig. 13

Preferred installation method

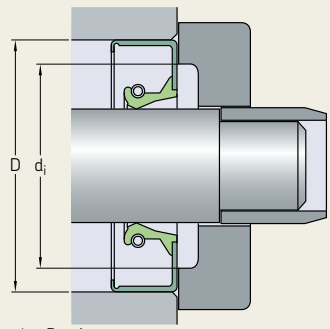

$d_i \approx D - 6$ mm

Fig. 14

Alternative installation method

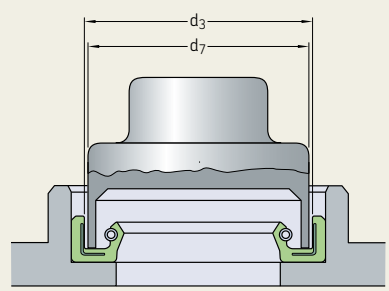

$d_7 = d_3 - 0{,}5$ mm

Fig. 15

Alternative installation method

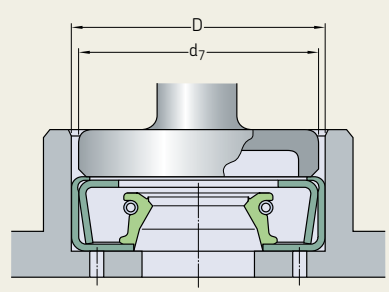

$d_7 = D - 0{,}5$ mm

Fig. 16

Installation sleeve

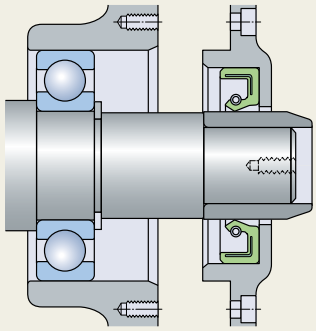

When installing seals on stepped shafts, where the shoulders do not have the recommended chamfer or rounded transition, an installation sleeve as shown in **fig. 17** must be used. If the sealing lip has to pass over grooves, threads or gearing, thin-walled installation sleeves, like those shown in **fig. 18**, can be used to prevent the lip from being damaged. The outside surface of the sleeve should be coated with the same lubricant that is used to lubricate the seal and counterface surface.

Radial shaft seals with a sealing lip made of a sensitive material should always be installed using an installation sleeve.

The tools used to install a seal at a certain distance in a cylindrical opening in a housing
are shown in **figs. 19 and 20**. Instructions for designing the tools can be supplied on request.

Fig. 17

Thin-walled installation sleeve

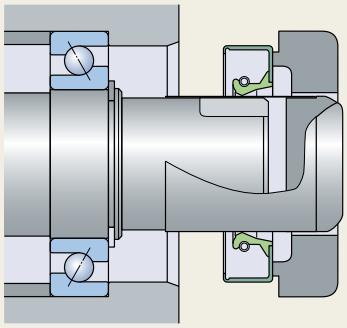

Fig. 18

Installation in a cylindrical opening

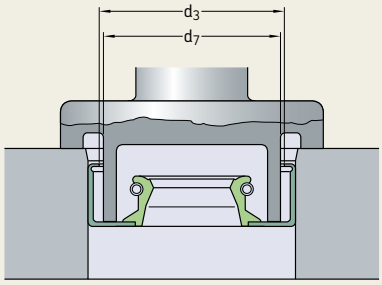

$d_7 = d_3 - 0{,}5$ mm

Fig. 19

Installation in a cylindrical opening

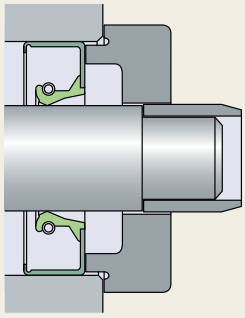

Seal installation, heavy industrial applications

General

- **Recommended seal installation temperature +5 to 40 °C**
  Polymeric materials shrink or expand depending on the environment temperature. Installing a seal at very low temperatures might lead to a gap between the ends of the seal. Installing a seal at very high temperatures might lead to a more difficult installation process. If seals have to or are installed in a very cold environment, warming the seals or the surroundings with a heating gun (max. 80 °C) until the cover plates are applied, is recommended.
- **Work clean**
  Before work begins, the cleanliness of the working environment must be checked. Dust and dirt that enters the application, or contaminates the seal or garter spring, during the seal replacement might lead to premature failure replacement.
- **Handle with care**
  Seals are fragile components that have to be handled with care. Dust and abrasive particles, a damaged or bent sealing lip or a carelessly installed spring can cause a service life reduction, leakage or consequential damage. Avoid contact with sharp objects. Do not slide the sealing edge over housing parts.
- **Do not install seal without visibility**
  It is crucial that the sealing lip is visible during the installation and that any installation failure (e.g. sealing lip bending) is avoided by supporting the sealing lip to slide onto the shaft as intended. Make sure that the garter spring stays in the spring groove and that the sealing lip is not damaged or bent backwards during the installation process.

Preparation

Split seals are specially packed for up-tower service. The seals are delivered cut with the ends secured to avoid damage during transport. Prior to installation, the transportation protection must be removed.

Cut the tape with scissors to open the packaging. Avoid touching the seal with sharp tools.

Instructions

Make sure that the necessary equipment is ready:

- Seal and garter spring in their respective package
- Knife or scissors to open the seal packaging
- Flashlight (to check the seal lip right after installation)
- Wood screw to dismount the used seal out of the housing bore
- A cleaning cloth to clean the housing bore during seal replacement
- Tools required to dismount and install the cover plates
- Optional but recommended: adhesive for securing the spring connection (Permabond HM162, Marston-Domsel MD666.620 or Loctite 243)

Metal-cased – HDS seals

When installing metal-reinforced seals, the first step is to check the shaft and housing bore for proper specifications and condition. Next, coat both the seal and bore lightly with a lubricant, preferably the same one that will be used to lubricate the application. For large diameter seals, a special installation tool may not be practical. In these cases, do not hit the seal or seal case directly. Instead, use a wooden block, long enough to span the seal's outside diameter. When using this method, it is important to apply hammer-blows evenly and sequentially to the wood piece around the seal circum ference to prevent the seal from tilting or skewing. SKF also recommends the use of a dead blow hammer for full energy transfer with less impact (→ **fig. 20**).

In some applications, the housing is designed for two seals in tandem, or a seal might have to be recessed further into the bore depth. In those cases, first set the seal flush with the housing using the method described above. Then, use a shorter piece of wood to drive the seal deeper into the bore utilizing a sequential pattern (→ **fig. 21**).

Seals are installed differently depending on whether their main purpose in a specific application is to retain lubricant or to exclude contaminants (→ **fig. 22**).

Fig. 20

Use a dead blow hammer

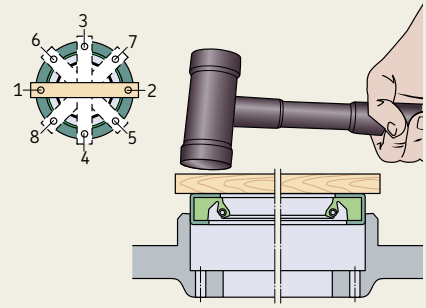

Fig. 21

Installation deeper into the bore

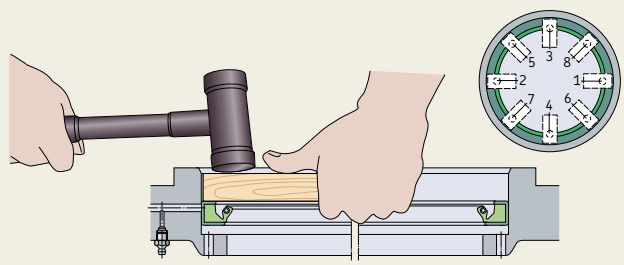

Fig. 22

Ways of installing (e.g. all-rubber HS seals)

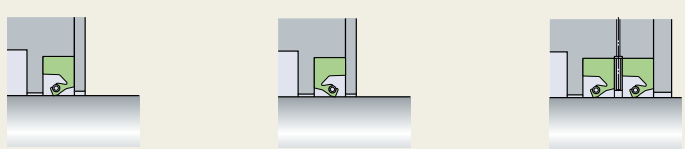

All-rubber seal installed to retain lubricant

All-rubber seal installed to exclude foreign material

All-rubber seals in tandem arrangement for maximum lubricant retention

Split seals – HRS

Ensure shaft and housing bore requirements listed in the SKF drawing are met. Clean shaft surface and housing bore and make sure that they meet the specifications.

1 Position the garter spring around the shaft at the installation position (→ **A** in **fig. 23**).

2 Connect the spring (**A**)
- a) Apply adhesive on open spring connection
- b) Back-wind the spring 7 full turns
- c) Screw the spring together leaving no gap

3 Dismount the used seal from the housing bore.

4 Lightly coat the counterface with a lubricant, preferably the same that will be used in the application (**B**).

5 Position the seal joint on the shaft so that it is at the 12 o'clock position (**C**).

6 Insert the garter spring into the groove trying to apply equal tension around the circumference.

7 Compress and push both ends of the joint into the housing bore (**D**).

8 Continue at the 6, 3 and 9 o'clock positions, push the rest of the seal into position and finish simultaneously. Use a small block of wood if needed to push the seal in the housing bore until it contacts the housing shoulder (**E**).

9 If an excluder seal HRE1 is used, position it around the shaft and push it against the back of the installed primary seal with the sealing lip facing to the opposite direction. Position the joint at the 6 o'clock position. The excluder seal may try to go out of the housing. Hold it in place until the cover plates are installed (**F**).

10 Check the seal condition, particularly at the joint, to make sure that it has been positioned properly. Install the cover plate on the housing face. Tighten the bolts evenly until the cover plate abuts the housing face (**G**).

Fig. 23

Installing a HRS split seal

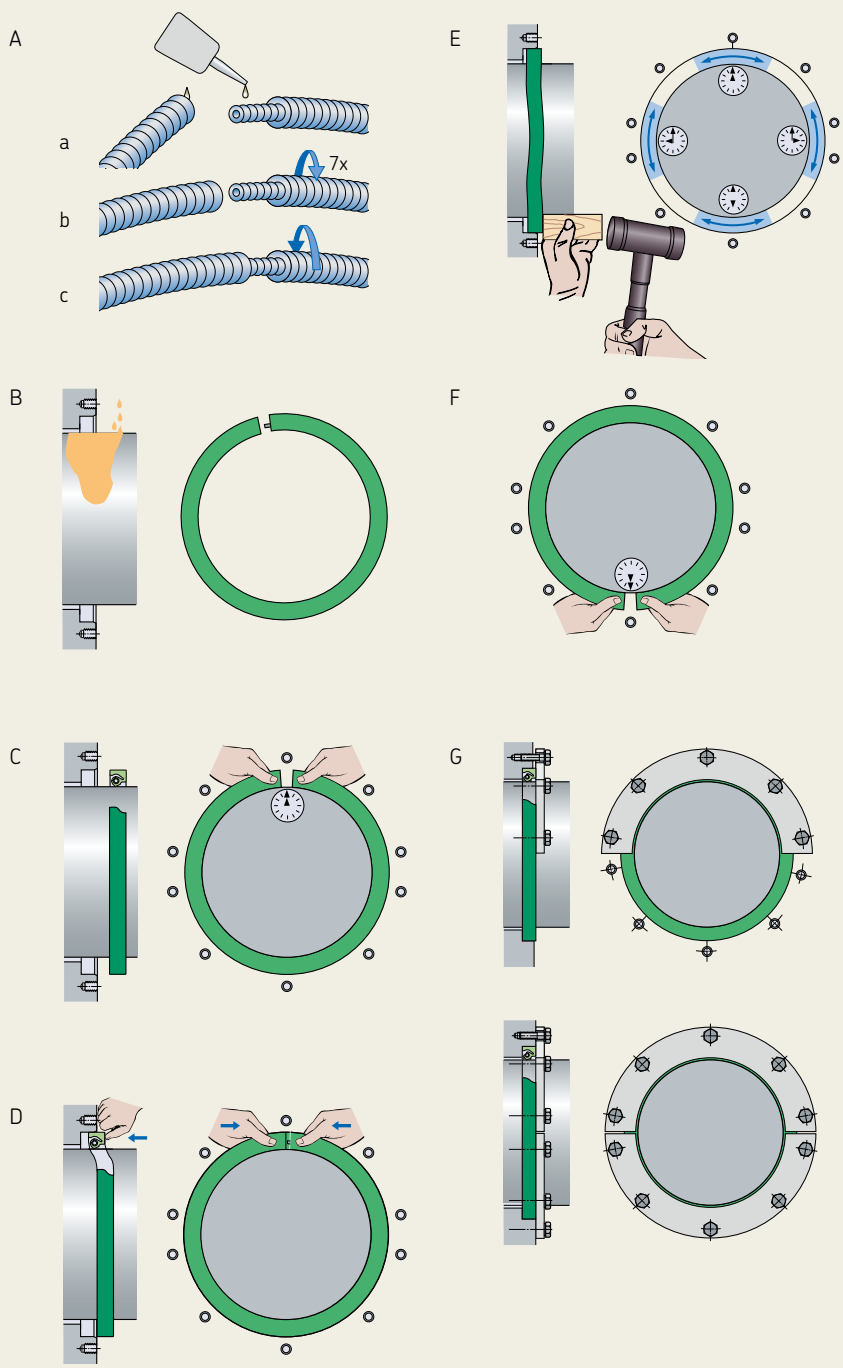

Split seals – HS and HSS

1 Where appropriate, insert the spring in the SKF Springlock groove and position the spring connection, so that it is displaced with regard to the seal joint (→ **A** in **fig. 24**). This is standard with all HS8 seals. Put the seal in the correct position on the shaft.
2 Lightly coat both the seal and counterface surface with a lubricant, preferably the same lubricant that will be used to lubricate the application (**B**).
3 Join the ends of the garter spring by using the spring connector (**C**).
4 For threaded connectors, back-wind the spring a couple of turns before the ends are brought together and allowed to thread into each other. When using a hook-and-eye connector, draw the ends of the spring together and insert the hook into the eye, taking care not to over-stretch the spring in the process, as this might impair seal performance. When using a control-wire connector, draw the seal ends together and insert the control wire into the centre of the spring coil.
5 Position the seal joint on the shaft so that it is at the 12 o'clock position and push both ends of the joint into the housing bore (**D**). Do not push only one joint and then work around the shaft as this will create an excess length, making installation difficult or impossible.
6 Continue at the 3 and 9 o'clock positions, push the rest of the seal into position (**E**) and finish simultaneously at the 6 and 12 o'clock positions. For shaft diameters ≥ 1 200 mm (*47 in*), it is advisable to fix the seal at the 12, 3, 6 and 9 o'clock positions before locating the remaining sections of the seal.
7 Use a small block of wood to push the seal in the housing bore until it contacts the housing shoulder (**E**).

Fig. 24

Installing an all-rubber split seal

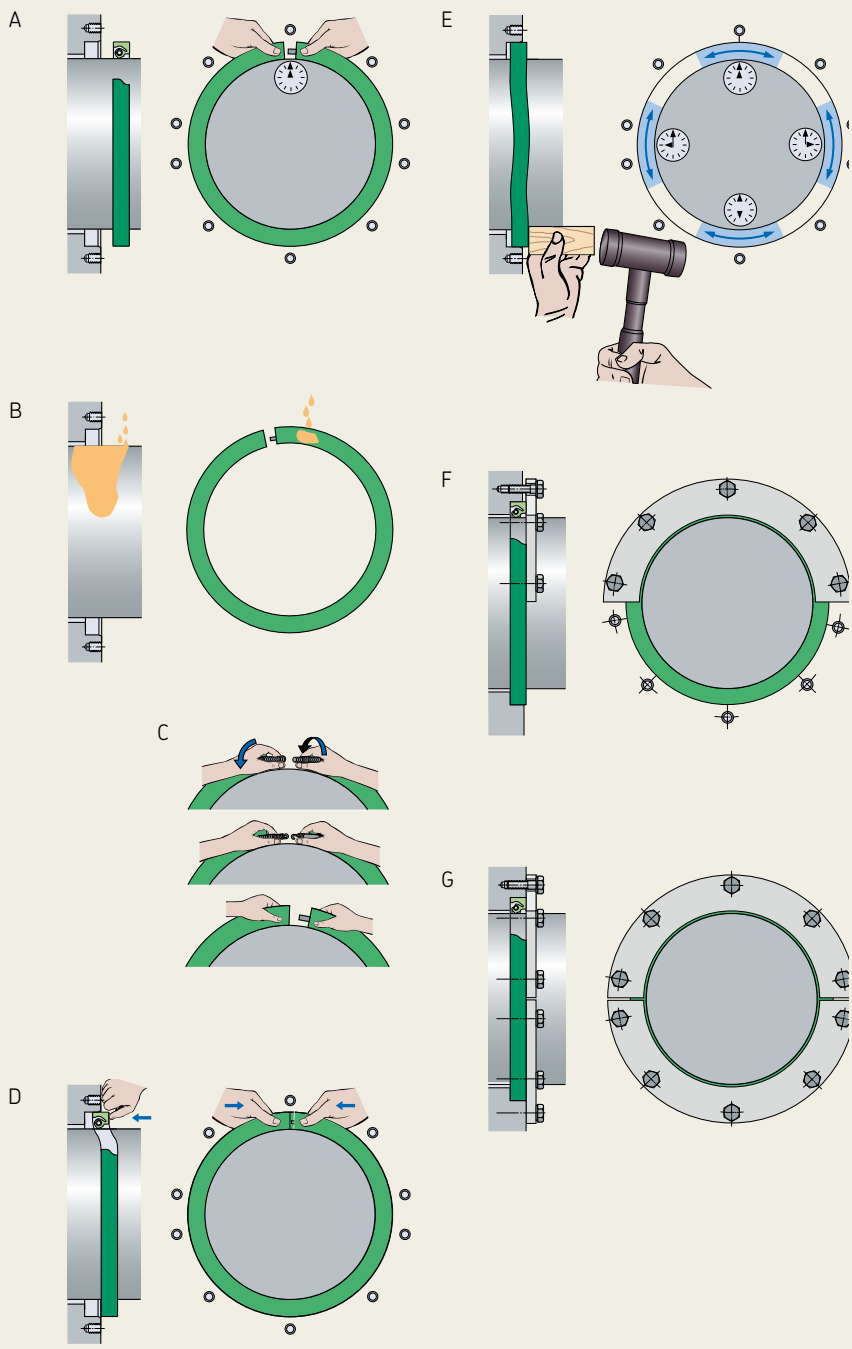

8 Check the seal condition, particularly at the joint, to make sure that it has been positioned properly.

9 Install the cover plate (see paragraph *Cover plates* on **page 94**) on the housing face. Tighten the bolts evenly until the end cover abuts the housing face (**F** and **G**).

Installation of HRS and HSS split seals

Video of HRS split seals installation in a wind turbine

Cover plates

Seals without metal reinforcement, split and solid, are manufactured oversized relative to the housing bore diameter and depth to enable proper compression and stability. A cover plate (→ **fig. 25**) provides axial compression of the seal and stabilizes it in the housing bore to achieve maximum seal performance. The cover plate must be dimensioned properly to obtain the required fit. It should be thick enough not to bend or distort. Generally, a thickness of 6,35 to 12,7 mm *(0.25 to 0.50 in)* is sufficient.

The plate should be fastened with bolts, no more than 150 mm *(6 in)* apart, on a bolt circle located as close to the seal housing bore as practical. The cover plate should be flat and the housing bore depth uniform. Splitting the cover plate at 180° will make seal replacement easier, particularly in confined areas.

To block surges of lubricant toward the seal from the inside and to protect the seal from damage from the outside, SKF recommends dimensioning the inside diameter of the cover plate so that it is 6 to 8 mm *(0.25 to 0.30 in)* greater than the shaft diameter to accommodate shaft-to-bore misalignment and runout (→ **fig. 25**).

In applications where supplementary sealing is necessary, and it is impractical to machine the original housing to provide a seal cavity, a seal cavity can be incorporated into a new plate that is bolted into place as illustrated in **fig. 26** on **page 95**.

Fig. 25

Cover plate recommendations

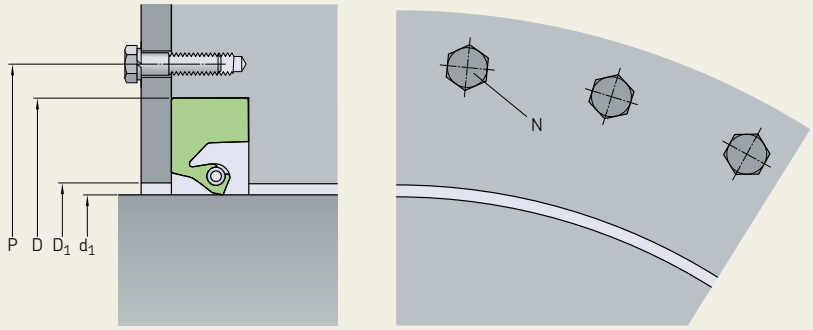

Inside diameter of cover: $D1 \approx d_1 + 6 .. 8$ [mm]
Pitch circle diameter of screws: $P \approx 1{,}1\ D$ [mm]
No. of attachment screws: $N \approx 0{,}02\ P$

Multiple HS seal installations

When installing two split all-rubber HS seals in one cavity, the locations of the split joints should be staggered by 30° to 60° to minimize the risk of leakage through the joints. The splits should be located toward the top of the bore. Grease the cavity between the seals to provide lubricant to the outer sealing lip.

When two HS seals, split or solid, are installed in the same housing bore, a spacing washer must be placed between the two seals (→ **fig. 27**). Suitable washer dimensions can be determined based on the shaft and housing bore diameters, d_1 and D, respectively:

- Washer inside diameter
  = d_1 + 6 to 10 mm *(0.25 to 0.4 in)*

- Washer outside diameter
  = D – 0,5 to 1,5 mm *(0.02 to 0.06 in)*

The width of the washer is determined by the application conditions. There should, however, always be sufficient room for lubrication holes to be provided in the circumference, or lubrication grooves in one side face (→ **fig. 28**). These lubrication provisions must enable grease to be supplied from the housing to the sealing lips via a drilled passage or grease fitting (→ **fig. 29** on **page 96**). When determining what washer width is appropriate for the depth of a housing bore, it is necessary to consider the axial displacement required when clamping the seals.

Fig. 26

Cover plate

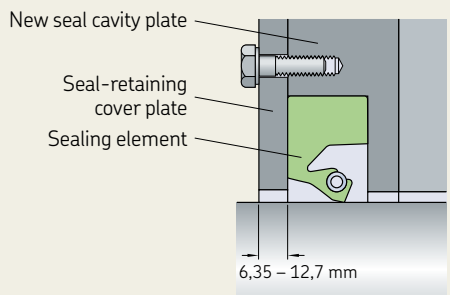

Fig. 27

Spacing washer

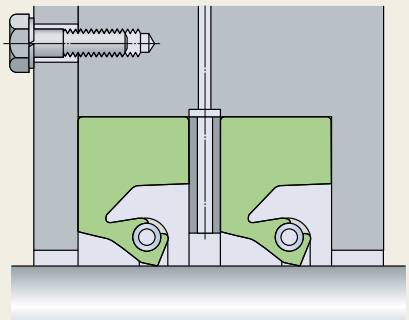

Fig. 28

Details of spacing washer for central lubrication
A separator between two seals can be a slotted washer to promote distribution of the lubricant.

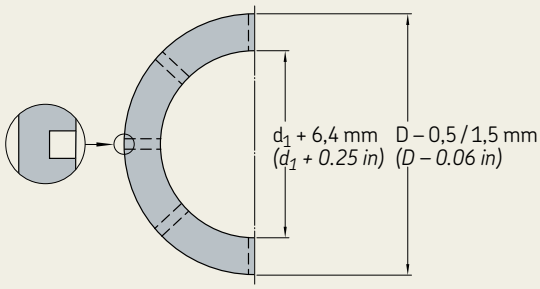

Fig. 29

Spacing washer and grease fitting

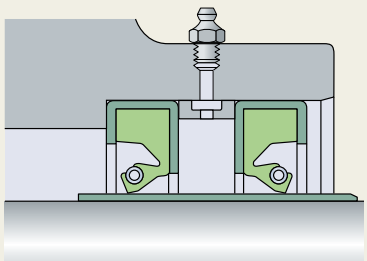

Fig. 30

Spacer lug

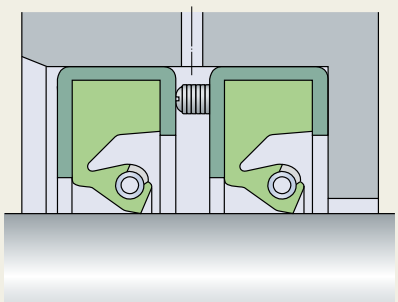

Multiple HDS seal installations

When installing two metal-cased radial shaft seals in the same housing bore, either in a tandem or back-to-back arrangement, care must be taken that neither of the sealing lips can run dry at any time. To reduce the risk of dry running, the space between the seals should be filled with a suitable grease.

To avoid dry running, SKF recommends using spacer lugs or a spacing washer between the two seals. The spacing washer should be provided with lubrication holes so that grease can be supplied to the space between the sealing lips via a grease fitting (→ **fig. 29**). No spacing washer is required when using seals that have spacer lugs built into the air side of the metal case (→ **fig. 30**). HDSD and HDSE seals can be supplied from SKF with holes pre-drilled in the metal case to mate with corresponding passages in the housing bore.

PTFE seals

In most cases, small diameter PTFE seals are shipped on a tube that maintains a nominal seal inside diameter (smaller than shaft diameter) during storage. Therefore, they should not be removed from the shipping tube until immediately prior to installation. Also, if quality inspections must be done, SKF recommends that the shipping tube remains in place. The seal inside diameter cannot be accurately measured anyway after manufacturing as the PTFE lip configuration changes over time as it relaxes.

PTFE formulations used for radial lip seals are generally more aggressive and abrasive to the shaft than standard elastomeric materials. Therefore, PTFE sealing lips require a surface hardness value of 58 to 62 HRC. An alternative to a hardened shaft surface is the use of an SKF wear sleeve, manufactured to the same high standards such as the inner rings of SKF needle roller bearings, offering an excellent sealing surface.

In applications where PTFE seals will be retaining a lubricant or be fully flooded with a fluid, the seals should be installed dry. In applications that run dry or will be starved for lubrication, the sealing lip should be pre-lubricated with a grease appropriate for the temperature conditions of the application.

⚠ WARNING

At temperatures above 300 °C (*570 °F*), all PTFE compounds give off dangerous fumes. For additional information, refer to **page 33**.

Installation procedure

PTFE lips do not have the same elastic properties as rubber lips, which makes them more susceptible to damage. Therefore, special care must be taken during installation and handling to prevent damage and help ensure proper operation and function. Shaft features such as keyways and splines, as well as drill holes, ports and sharp-edged shaft steps have the potential to damage PTFE lips. Whenever possible, these obstructions can be covered by using thin-walled installation tools made from plastic or metal.

PTFE lip orientation during installation will determine the installation method. Installation is more difficult when the shaft is installed against the PTFE lip (→ **fig. 31, a** and **c**). This type of installation becomes even more complicated when the hardware is difficult to access or visually obstructed and may not be possible if an installation tool cannot be used. In any case, when the shaft is installed against the PTFE lip, SKF recommends the use of an installation cone or "bullet". SKF can quote and manufacture installation cones if detailed drawings of the shaft and sealing areas are provided. In lieu of installation cones, longer than normal lead-in chamfers on the shaft would be required. However, shaft features that could damage the seal (keyways, etc.) must still be covered, possibly with tape.

If the shaft is installed with the PTFE lip, a smooth, burr-free radius or chamfer on the shaft end is all that is required, provided that no damaging shaft features are present as noted above (→ **fig. 31, b** and **d).**

Some seals have two PTFE lips facing opposite directions. In this case, installation is always against one of the lips and an installation cone is recommended.

Fig. 31

Seals with a PTFE sealing lip

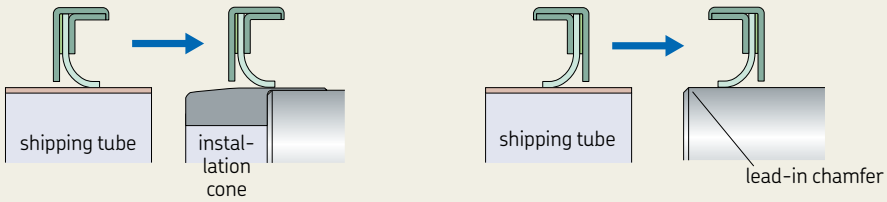

a) Installation against the PTFE lip

b) Installation with the PTFE lip

Seals with an elastomeric sealing lip and a PTFE auxilary lip

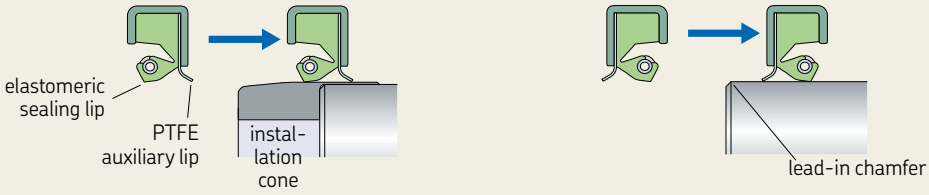

c) Installation against the PTFE lip

d) Installation with the PTFE lip

Protecting the counterface surface against corrosion

The seal counterface surface should be protected from corrosion until the machine is operational. Be sure to use a rust inhibitor that will last for a year, whether or not the shaft is exposed.

The protective coating should be soluble in the medium to be retained and must not cause any chemical separation as this can impair the sealing performance.

When machines are transported, stored under unfavourable conditions, or out of service for extended periods, special rust inhibitors should be used. These rust inhibitors should form a tough, pliable waxy film that can be removed using neutral solvents that leave an oily residue.

Removal

Because radial shaft seals should never be reused, there is no need to worry about damaging the seal when removing it. However, prior to removal, it is advisable to note the direction in which the seal is installed so that the replacement seal can be installed in the same direction. Small seals can generally be removed using a screwdriver, taking care not to damage the shaft surface. The removal of large-size seals is made easier if holes have been provided in the housing shoulder A, see picture in **table 10**, **page 84**, allowing access for a drift.

Replacement

The lip of the replacement seal should not run on the same path as the lip of the old seal. There are several ways to achieve this:

- Install SKF Speedi-Sleeve, see **page 240**.
- Rework or replace the counterface (this may entail removing the shaft).
- Install a spacing ring in the housing bore between the housing shoulder and the seal (→ **fig. 32**).
- Press the new seal to a different depth in a cylindrical opening in the housing, i.e. toward the medium to be sealed.

When choosing a replacement seal, be sure that its design and material correspond to the original seal. In case of doubt, select a seal that meets the operating conditions of the application, and that the seal materials are compatible with the lubricant.

Seals made from a different material should only be used when absolutely necessary. In these cases, the recommendations provided in **table 14** should be followed. The order in which the materials are listed is an indication of their suitability.

If a seal of the same design is not available in the same width as the original, then a somewhat narrower seal can be used, or if the depth of the housing bore allows, a somewhat wider seal can be selected as the replacement.

Fig. 33

Spacing ring

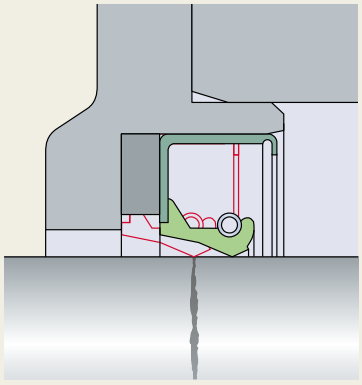

Table 14

Replacement sealing lip materials

Original	Replacement
Felt	Nitrile rubber Polyacrylate elastomer Fluoro rubber
Leather	Nitrile rubber Fluoro rubber
Nitrile rubber	Polyacrylate elastomer Fluoro rubber Silicone rubber
Polyacrylate elastomer	Fluoro rubber Silicone rubber
Silicone rubber	Fluoro rubber

A.1 Seals for general industrial applications

50%
OF PREMATURE BEARING FAILURE IS RELATED TO SEALING ISSUES

Seals for general industrial applications

- Improved performance
- Easy installation

Designation system

Metric radial shaft seals

Designations of all SKF metric radial shaft seals specify shaft diameter, housing bore diameter and nominal seal width (bore depth for HSF and HS seals) in millimetres, followed by design and the code of the sealing lip material (→ **table 1**).

Inch-size radial shaft seals

Inch-size SKF radial shaft seals are identified by their stock number that consists of four to seven digits. The stock number provides an indication of seal size.

- Four-figure numbers are used for radial shaft seals for

  shaft diameters: $d_1 \leq 1$ in, e.g.
  3680 $d_1 = 0.375$ in

- Five-figure numbers are used for radial shaft seals for

  shaft diameters: $d_1 \leq 10$ in, e.g.
  41287 $d_1 = 4.125$ in
  97545 $d_1 = 9.750$ in

- Six- and seven-figure numbers are used for radial shaft seals for

  shaft diameters: $d_1 \geq 10$ in, e.g.
  120061 $d_1 = 12$ in
  1375242 $d_1 = 13.75$ in

Table 1

Designation system for metric radial shaft seals

55 72 8 HMSA10 RG 1

Dimensions

55	Shaft diameter
72	Housing bore diameter
8	Nominal seal width (bore depth for HSF and HS seals)

Design
HMSA10

Lip material

RG	Acrylonitrile-butadiene rubber, SKF developed, used for the HMS5 and HMSA10 seals

Execution

1, 2...	Seals of the same size and design that differ in execution from the basic design are identified by a number e.g. R1

Assortment, availability and classification

The SKF assortment of radial shaft seals comprises some 200 designs and executions for applications within basically all industries. The radial shaft seals described in this publication belong to the standard range and most of them are available in both metric and inch sizes. New seal designs and sizes are continually added. For additional information, contact SKF.

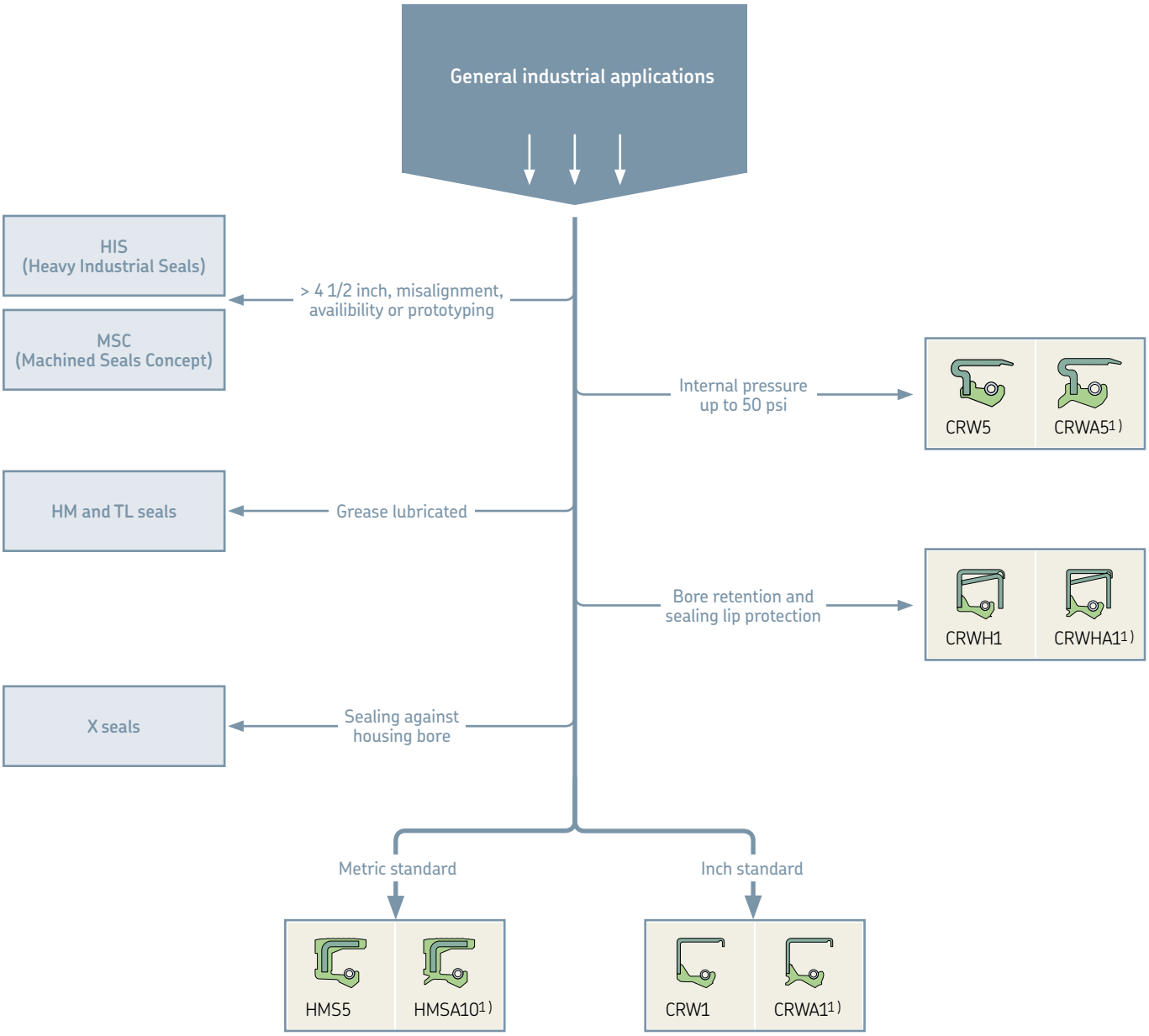

1) Same seal design with auxiliary lip for further protection

Designation system for metric radial shaft seals

RG, R	Nitrile rubber
V	Fluoro rubber
T	Polytetrafluoroethylene (PTFE)

Seal designs	**Design** Outside diameter Configuration	Material code	Sealing lip Configuration	Material code	Auxiliary lip A = Contacting B = Non-contacting
	–				
  HMS5 HMSA10	Rubber	RG, V	Straight	RG V	B (HMSA10)
  CRW1 CRWH1	Metal	N/A	SKF Wave	R V	N/A
  CRWA1 CRWHA1	Metal	N/A	SKF Wave	R V	B
  CRW5 CRWA5	Metal	N/A	SKF Wave	R V	A (CRWA5)
  CRS1 CRSH1	Metal	N/A	Straight	R V	N/A
  CRSA1 CRSHA1	Metal	N/A	Straight	R V	A
 HM14	Metal	N/A	Straight	R V	N/A
 X15	Rubber	R	Special	R	N/A
   SL SLX SLS	Metal	N/A	Special	T	N/A
   SLA DL DLA	Metal	N/A	Special	T	A (SLA, DLA)
   YSLE YNSLE YSL	Fluoroplastic / (rubber)	T (+ R, V)	Special	T	N/A

* PTFE designs are made to order to handle temperatures, pressures and speeds that may exceed those stated for rubber sealing lip designs.

Matrix 1

Operating temperature range				Shaft-to-bore mis-alignment (STBM) TIR		Dynamic runout (DRO) TIR		Pressure differential		Maximum shaft surface speed	
from	to	from	to								
°C		°F		mm	*in*	mm	*in*	MPa	*psi*	m/s	*ft/min*
–40	100	*–40*	*210*	0,38	*0.015*	0,51	*0.020*	0,05	*7*	14	*2 755*
–40	200	*–40*	*390*								
–40	100	*–40*	*210*	0,38	*0.015*	0,51	*0.020*	0,07	*10*	18	*3 600*
–40	200	*–40*	*390*								
–40	100	*–40*	*210*	0,38	*0.015*	0,51	*0.020*	0,07	*10*	18	*3 600*
–40	200	*–40*	*390*								
–40	100	*–40*	*210*	0,13	*0.005*	0,13	*0.005*	0,35	*50*	10	*2 000*
–40	200	*–40*	*390*								
–40	100	*–40*	*210*	0,38	*0.015*	0,51	*0.020*	0,07	*10*	18	*3 600*
–40	200	*–40*	*390*								
–40	100	*–40*	*210*	0,38	*0.015*	0,51	*0.020*	0,07	*10*	18	*3 600*
–40	200	*–40*	*390*								
–40	100	*–40*	*210*	0,13	*0.005*	0,08	*0.003*	0,07	*10*	10	*2 000*
–40	200	*–40*	*390*								
–40	100	*–40*	*210*	0,38	*0.015*	0,25	*0.010*	0,02	*3*	2,54	*500*
–70	250	*–95*	*480*	*	*	*	*	*	*	*	*
–70	250	*–95*	*480*	*	*	*	*	*	*	*	*
–70	250	*–95*	*480*	*	*	*	*	*	*	*	*

HMS5 and HMSA10 seals

Fig. 1

HMS5

Fig. 2

HMSA10

Main features

SKF metric rubber outside diameter radial shaft seals, HMS5 and HMSA10, are designed in accordance with ISO 6194-1 and DIN 3760 for use in a wide range of industrial applications. The available size range of HMS5 and HMSA10 seals includes a full coverage of the ISO 6194-1 and DIN 3760 dimensions for shaft diameters up to 250 mm *(9.842 in)* as well as an extensive range of dimensions commonly used in the market. New dimensions are continually added. Main features include:

- Optimized sealing lip material
- Spring-loaded sealing lip
- Optimally balanced sealing lip and flex section
- Beaded outside diameter
- Auxiliary lip (HMSA10 seals only

Design

The rubber outside diameter provides optimized sealing ability in the housing, also at considerable surface roughness or in split housings. The beads on the outside diameter provide improved sealing ability and retention in the bore. They also prevent spring-back during installation.

The spring-loaded sealing lip contributes to a quick response in handling dynamic runout and maintaining the sealing performance, even when sealing lip wear is excessive.

Sealing lip and flex section are optimally balanced to withstand both high dynamic runout and shaft-to-bore misalignment.

The auxiliary lip on HMSA10 seals is non-contacting, which means that the seals normally can operate at the same speeds as the single-lip HMS5 seals.

Material

The optimized nitrile rubber compound used for the HMS5 and HSMA10 seals has the designation suffix RG. The compound is the result of long experience and the latest findings from the SKF sealing material developments. Advantages of this material include:

- Good resistance to ageing
- Very good compatibility with synthetic oils
- Very good pumping ability
- Good wear resistance

Pumping ability is defined as the time it takes for the seal to return a certain amount of oil from the air side to the oil side. The microstructure of SKF's RG nitrile rubber compound promotes rapid pumping of the oil, (→ **table 2** on **page 107**). In **diagram 1** on **page 107**, results from endurance tests show the extended service life of seals made of the optimized nitrile compound.

The complete range of HMS5 and HMSA10 seals is also available in a fluoro rubber compound with a stainless steel garter spring. This rubber compound has the designation suffix V and is used in applications where temperatures exceed the limits of nitrile rubber.

Applications and operating conditions

HMS5 and HMSA10 seals are designed for oil or grease lubricated applications with operating temperatures ranging from –40 to +100 °C *(–40 to +210 °F)*, short-term up to 120 °C *(250 °F)*. These seals are also appropriate for sealing lubricants within a wide range of viscosities.

- Circumferential speed: up to 14 m/s *(2 755 ft/min)*
- Operating pressure: max. 0,05 MPa *(7 psi)*

These values are the maximum value for each service condition and should not occur together. Consideration should be given as to how the operating conditions affect each other. For information on seals under pressure, see **page 79**.

New sizes

If the necessary size is not listed in the product tables on the following pages, we can add more sizes on request (also in inch size). Contact your local SKF representative.

Table 2

Pumping ability

Speed Rotating	Circumferential	**Pumping time** Standard NBR	SKF compound RG
r/min	m/s	s	
1 000	3,1	–	117
1 500	4,7	280	69
2 000	6,3	186	50
2 500	7,9	130	40
3 000	9,4	102	31
3 500	11,0	82	25
4 000	12,6	68	21
4 500	14,1	57	18

Shaft diameter 60 mm, engine oil SAE 30

Diagram 1

Average seal life
(as a percentage of baseline, product A)

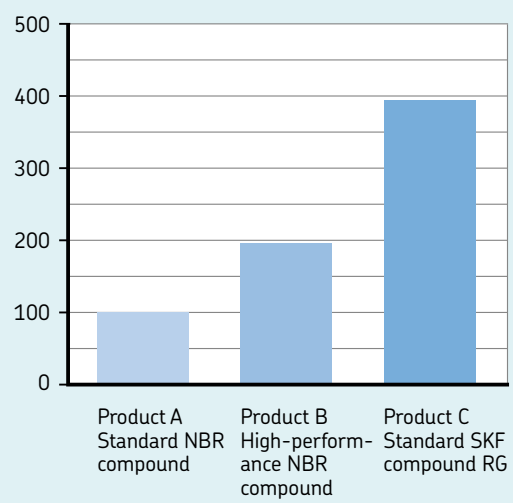

d_1 **6–25** m

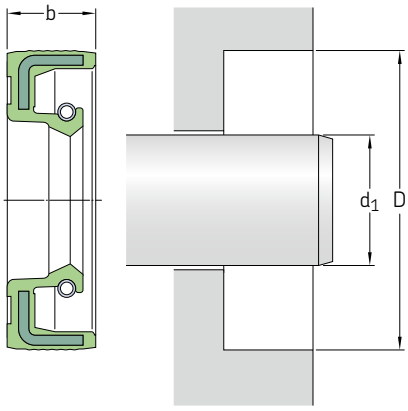

[1] Designation to be followed by the design and material codes, indicating one of the four variants available for each dimension:

HMS5 RG	without auxiliary lip, nitrile rubber
HMS5 V	without auxiliary lip, fluoro rubber
HMSA10 RG	with auxiliary lip, nitrile rubber
HMSA10 V	with auxiliary lip, fluoro rubber
Example:	**6×16×5 HMSA10 RG**

[2] Design execution differs from the basic design and is indicated by a number, see also **page 102**.

Please see **pages 85** and 8**6** for housing bore requirements.

Dimensions Shaft d_1	Bore D	Nominal seal width b	**Designation**[1]	**ISO / DIN**
mm			–	–
6	16	5	**6×16×5**	
	16	7	**6×16×7**	•
	22	7	**6×22×7**	•
7	16	7	**7×16×7**[2]	
	22	7	**7×22×7**	•
8	18	5	**8×18×5**	
	18	7	**8×18×7**	
	22	7	**8×22×7**	•
	24	7	**8×24×7**	•
9	22	7	**9×22×7**	•
10	19	7	**10×19×7**[2]	
	20	6	**10×20×6**	
	20	7	**10×20×7**	
	22	7	**10×22×7**	•
	24	7	**10×24×7**	
	25	7	**10×25×7**	•
	26	7	**10×26×7**	•
	30	7	**10×30×7**	
12	19	5	**12×19×5**[2]	
	22	5	**12×22×5**	
	22	6	**12×22×6**	
	22	7	**12×22×7**	•
	24	7	**12×24×7**	•
	25	7	**12×25×7**	•
	28	7	**12×28×7**	

Dimensions Shaft d_1	Bore D	Nominal seal width b	**Designation**[1]	**ISO / DIN**
mm			–	–
12 cont.	30	7	**12×30×7**	•
	32	7	**12×32×7**	
	37	7	**12×37×7**	
13	26	7	**13×26×7**	
14	24	7	**14×24×7**	•
	25	5	**14×25×5**	
	28	7	**14×28×7**	
	30	7	**14×30×7**	•
15	24	7	**15×24×7**[2]	
	25	5	**15×25×5**	
	25	6	**15×25×6**	
	26	7	**15×26×7**	•
	30	7	**15×30×7**	•
	32	7	**15×32×7**	
	35	7	**15×35×7**	•
	40	7	**15×40×7**	
	40	10	**15×40×10**	
16	24	7	**16×24×7**[2]	
	28	7	**16×28×7**	
	30	7	**16×30×7**	•
	32	7	**16×32×7**	
	35	7	**16×35×7**	•
17	28	7	**17×28×7**	

Dimensions Shaft d_1	Bore D	Nominal seal width b	Designation[1)]	ISO / DIN
mm			–	–
17 cont.	29	5	**17×29×5**	
	30	7	**17×30×7**	
	32	7	**17×32×7**	
	35	7	**17×35×7**	
	37	7	**17×37×7**	
	40	7	**17×40×7**	
	40	10	**17×40×10**	
.	47	7	**17×47×7**	
	47	10	**17×47×10**	
18	28	7	**18×28×7**	
	30	6	**18×30×6**	
	30	7	**18×30×7**	•
	32	7	**18×32×7**	
	35	7	**18×35×7**	•
	40	7	**18×40×7**	
19	30	7	**19×30×7**	
	30	8	**19×30×8**	
	32	7	**19×32×7**	
	42	6	**19×42×6**	
20	30	5	**20×30×5**	
	30	7	**20×30×7**	•
	32	6	**20×32×6**	
	32	7	**20×32×7**	
	34	7	**20×34×7**	
	35	6	**20×35×6**	
	35	7	**20×35×7**	•
	35	8	**20×35×8**	
	35	10	**20×35×10**	
	36	7	**20×36×7**	
	38	7	**20×38×7**	
	40	7	**20×40×7**	•
	40	10	**20×40×10**	
	42	7	**20×42×7**	
	42	10	**20×42×10**	
	45	7	**20×45×7**	
	47	7	**20×47×7**	
	47	10	**20×47×10**	
	52	7	**20×52×7**	
	52	10	**20×52×10**	
21	35	7	**21×35×7**	
	40	7	**21×40×7**	

Dimensions Shaft d_1	Bore D	Nominal seal width b	Designation[1)]	ISO / DIN
mm			–	–
22	32	7	**22×32×7**	
	35	7	**22×35×7**	•
	36	7	**22×36×7**	
	38	8	**22×38×8**	
	40	7	**22×40×7**	•
	40	10	**22×40×10**	
	42	10	**22×42×10**	
	45	7	**22×45×7**	
	47	7	**22×47×7**	•
23	40	10	**23×40×10**	
24	35	7	**24×35×7**	
	37	7	**24×37×7**	
	40	7	**24×40×7**	
	42	8	**24×42×8**	
	47	7	**24×47×7**	
	50	10	**24×50×10**	
25	35	6	**25×35×6**	
	35	7	**25×35×7**	•
	37	5	**25×37×5**	
	37	6	**25×37×6**	
	37	7	**25×37×7**	
	38	7	**25×38×7**	
	40	5	**25×40×5**	
	40	7	**25×40×7**	•
	40	8	**25×40×8**	
	40	10	**25×40×10**	
	42	6	**25×42×6**	
	42	7	**25×42×7**	
	42	10	**25×42×10**	
	45	7	**25×45×7**	
	45	8	**25×45×8**	
	45	10	**25×45×10**	
	46	7	**25×46×7**	
	47	7	**25×47×7**	•
	47	10	**25×47×10**	
	50	10	**25×50×10**	
	52	7	**25×52×7**	•
	52	8	**25×52×8**	
	52	10	**25×52×10**	
	62	7	**25×62×7**	
	62	8	**25×62×8**	
	62	10	**25×62×10**	
	72	7	**25×72×7**	

d_1 **26–40** mm

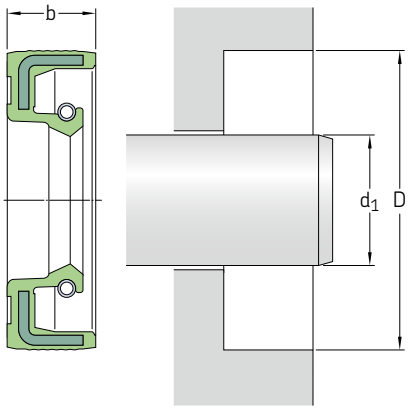

[1] Designation to be followed by the design and material codes, indicating one of the four variants available for each dimension:

HMS5 RG	without auxiliary lip, nitrile rubber
HMS5 V	without auxiliary lip, fluoro rubber
HMSA10 RG	with auxiliary lip, nitrile rubber
HMSA10 V	with auxiliary lip, fluoro rubber
Example:	**6×16×5 HMSA10 RG**

[2] Design execution differs from the basic design and is indicated by a number, see also **page 102**.

Please see **pages 85** and 8**6** for housing bore requirements.

Dimensions Shaft d_1	Bore D	Nominal seal width b	**Designation**[1]	**ISO / DIN**
mm			–	–
26	37	7	**26×37×7**	
	38	5	**26×38×5**	
	38	7	**26×38×7**	
	42	7	**26×42×7**	
	47	7	**26×47×7**	
27	37	7	**27×37×7**	
	42	10	**27×42×10**	
	43	7	**27×43×7**	
	47	7	**27×47×7**	
	47	10	**27×47×10**	
28	38	7	**28×38×7**	
	38	8	**28×38×8**	
	40	7	**28×40×7**	•
	40	8	**28×40×8**	
	42	7	**28×42×7**	
	42	8	**28×42×8**	
	44	6	**28×44×6**	
	45	8	**28×45×8**	
	47	7	**28×47×7**	•
	47	10	**28×47×10**	
	52	7	**28×52×7**	•
	52	10	**28×52×10**	
30	40	7	**30×40×7**	•
	42	6	**30×42×6**	
	42	7	**30×42×7**	•
	42	8	**30×42×8**	
30	44	7	**30×44×7**	

Dimensions Shaft d_1	Bore D	Nominal seal width b	**Designation**[1]	**ISO / DIN**
mm			–	–
30	45	7	**30×45×7**	
cont.	45	8	**30×45×8**	
	46	7	**30×46×7**	
	47	6	**30×47×6**	
	47	7	**30×47×7**	•
	47	8	**30×47×8**	
	47	10	**30×47×10**	
	48	8	**30×48×8**	
	50	5	**30×50×5**	
	50	7	**30×50×7**	
	50	8	**30×50×8**	
	50	10	**30×50×10**	
	52	7	**30×52×7**	•
	52	8	**30×52×8**	
	52	10	**30×52×10**	
	55	7	**30×55×7**	
	55	10	**30×55×10**	
	62	7	**30×62×7**	
	62	10	**30×62×10**	
	72	10	**30×72×10**	
32	42	7	**32×42×7**	
	43	7	**32×43×7**	
	44	7	**32×44×7**	
	45	7	**32×45×7**	•
	45	8	**32×45×8**	•
	47	6	**32×47×6**	
	47	7	**32×47×7**	•
	47	8	**32×47×8**	•
	47	10	**32×47×10**	
	48	8	**32×48×8**	

Dimensions Shaft d_1	Bore D	Nominal seal width b	Designation[1)]	ISO / DIN
mm			–	–
32 cont.	50	8	**32×50×8**	
	50	10	**32×50×10**	
	52	7	**32×52×7**	•
	52	8	**32×52×8**	•
	55	10	**32×55×10**	
	62	10	**32×62×10**	
	72	7	**32×72×7**	
	80	7	**32×80×7**	
33	45	7	**33×45×7**	
	50	6	**33×50×6**	
34	44	8	**34×44×8**	
	48	8	**34×48×8**	
	52	8	**34×52×8**	
	62	10	**34×62×10**	
35	45	7	**35×45×7**	
	47	6	**35×47×6**	
	47	7	**35×47×7**	•
	47	8	**35×47×8**	•
	48	8	**35×48×8**	
	49	6	**35×49×6**	
	50	7	**35×50×7**	•
	50	8	**35×50×8**	•
	50	10	**35×50×10**	
	52	7	**35×52×7**	•
	52	8	**35×52×8**	•
	52	10	**35×52×10**	
	55	7	**35×55×7**	•
	55	8	**35×55×8**	•
	55	10	**35×55×10**	
	56	10	**35×56×10**	
	58	10	**35×58×10**	
	60	10	**35×60×10**	
	62	7	**35×62×7**	
	62	8	**35×62×8**	
	62	10	**35×62×10**	
	72	7	**35×72×7**	
	72	10	**35×72×10**	
	72	12	**35×72×12**	
	80	12	**35×80×12**	
36	47	7	**36×47×7**	
	50	7	**36×50×7**	
	52	7	**36×52×7**	

Dimensions Shaft d_1	Bore D	Nominal seal width b	Designation[1)]	ISO / DIN
mm			–	–
36 cont.	58	10	**36×58×10**	
	62	7	**36×62×7**	
37	50	6	**37×50×6**	
38	50	7	**38×50×7**	
	52	7	**38×52×7**	
	52	8	**38×52×8**	
	54	10	**38×54×10**	
	55	7	**38×55×7**	•
	55	8	**38×55×8**	•
	55	10	**38×55×10**	
	58	8	**38×58×8**	•
	58	10	**38×58×10**	
	60	10	**38×60×10**	
	62	7	**38×62×7**	•
	62	8	**38×62×8**	•
	62	10	**38×62×10**	
	72	10	**38×72×10**	
	80	8	**38×80×8**	
38,5	58	7	**38.5×58×7**	
40	50	8	**40×50×8**	
	52	6	**40×52×6**	
	52	7	**40×52×7**	•
	52	8	**40×52×8**	•
	55	7	**40×55×7**	•
	55	8	**40×55×8**	•
	56	8	**40×56×8**	
	58	7	**40×58×7**	
	58	8	**40×58×8**	
	58	10	**40×58×10**	
	60	8	**40×60×8**	
	60	10	**40×60×10**	
	62	6	**40×62×6**	
	62	7	**40×62×7**	•
	62	8	**40×62×8**	•
	62	10	**40×62×10**	
	65	10	**40×65×10**	
	65	12	**40×65×12**	
	68	8	**40×68×8**	
	68	10	**40×68×10**	
	70	8	**40×70×8**	
	72	7	**40×72×7**	
	72	10	**40×72×10**	
	80	8	**40×80×8**	
	80	10	**40×80×10**	
	80	12	**40×80×12**	

d_1 **40–70** mm

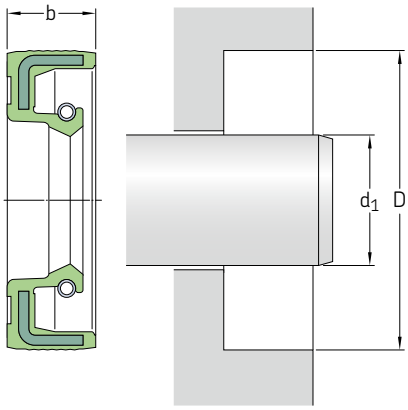

[1] Designation to be followed by the design and material codes, indicating one of the four variants available for each dimension:

HMS5 RG	without auxiliary lip, nitrile rubber
HMS5 V	without auxiliary lip, fluoro rubber
HMSA10 RG	with auxiliary lip, nitrile rubber
HMSA10 V	with auxiliary lip, fluoro rubber
Example:	**6×16×5 HMSA10 RG**

[2] Design execution differs from the basic design and is indicated by a number, see also **page 102**.

Please see **pages 85** and 8**6** for housing bore requirements.

Dimensions Shaft d_1	Bore D	Nominal seal width b	**Designation**[1]	**ISO / DIN**
mm			–	–
40	90	10	**40×90×10**	
cont.	90	12	**40×90×12**	
41	56	7	**41×56×7**	
42	53	7	**42×53×7**	
	55	7	**42×55×7**	
	55	8	**42×55×8**	•
	56	7	**42×56×7**	
	60	7	**42×60×7**	
	62	7	**42×62×7**	
	62	8	**42×62×8**	•
	62	10	**42×62×10**	
	65	10	**42×65×10**	
	65	12	**42×65×12**	
	66	10	**42×66×10**	
	67	10	**42×67×10**	
	72	8	**42×72×8**	
	72	10	**42×72×10**	
43	62	8	**43×62×8**	
44	60	10	**44×60×10**	
	62	10	**44×62×10**	
	65	10	**44×65×10**	
45	55	7	**45×55×7**	
	58	7	**45×58×7**	
	60	7	**45×60×7**	
	60	8	**45×60×8**	•
	60	10	**45×60×10**	

Dimensions Shaft d_1	Bore D	Nominal seal width b	**Designation**[1]	**ISO / DIN**
mm			–	–
45	62	7	**45×62×7**	
cont.	62	8	**45×62×8**	•
	62	10	**45×62×10**	
	65	8	**45×65×8**	•
	65	10	**45×65×10**	
	68	7	**45×68×7**	
	68	10	**45×68×10**	
	68	12	**45×68×12**	
	72	8	**45×72×8**	
	72	10	**45×72×10**	
	75	8	**45×75×8**	
	75	10	**45×75×10**	
	80	10	**45×80×10**	
	85	10	**45×85×10**	
	100	10	**45×100×10**	
46	59	12	**46×59×12**	
	65	10	**46×65×10**	
47	65	10	**47×65×10**	
	70	10	**47×70×10**	
	90	10	**47×90×10**	
48	62	8	**48×62×8**	•
	65	10	**48×65×10**	
	68	10	**48×68×10**	
	70	10	**48×70×10**	
	72	7	**48×72×7**	
	72	8	**48×72×8**	
	72	10	**48×72×10**	

Dimensions Shaft d_1	Bore D	Nominal seal width b	Designation[1)]	ISO / DIN
mm			–	–
50	62	7	**50×62×7**	
	64	6	**50×64×6**	
	65	8	**50×65×8**	•
	65	10	**50×65×10**	
	68	7	**50×68×7**	
	68	8	**50×68×8**	•
	68	10	**50×68×10**	
	70	10	**50×70×10**	
	72	8	**50×72×8**	•
	72	10	**50×72×10**	
	72	12	**50×72×12**	
	75	10	**50×75×10**	
	80	8	**50×80×8**	
	80	10	**50×80×10**	
	85	10	**50×85×10**	
	90	10	**50×90×10**	
	100	10	**50×100×10**	
52	63	8	**52×63×8**	
	65	8	**52×65×8**	
	68	8	**52×68×8**	
	72	8	**52×72×8**	
	72	10	**52×72×10**	
	80	10	**52×80×10**	
	85	10	**52×85×10**	
	100	10	**52×100×10**	
55	68	8	**55×68×8**	
	70	8	**55×70×8**	•
	70	10	**55×70×10**	
	72	8	**55×72×8**	•
	72	10	**55×72×10**	
	75	8	**55×75×8**	
	75	10	**55×75×10**	
	78	10	**55×78×10**	
	78	12	**55×78×12**	
	80	8	**55×80×8**	•
	80	10	**55×80×10**	
	85	8	**55×85×8**	
	85	10	**55×85×10**	
	90	8	**55×90×8**	
	90	10	**55×90×10**	
	100	10	**55×100×10**	
	100	12	**55×100×12**	
56	72	8	**56×72×8**	

Dimensions Shaft d_1	Bore D	Nominal seal width b	Designation[1)]	ISO / DIN
mm			–	–
57	67	7	**57×67×7**	
58	72	8	**58×72×8**	
	80	8	**58×80×8**	
	80	10	**58×80×10**	
	80	12	**58×80×12**	
60	72	8	**60×72×8**	
	75	8	**60×75×8**	•
	80	7	**60×80×7**	
	80	8	**60×80×8**	•
	80	10	**60×80×10**	
	82	12	**60×82×12**	
	85	8	**60×85×8**	•
	85	10	**60×85×10**	
	90	8	**60×90×8**	
	90	10	**60×90×10**	
	95	10	**60×95×10**	
	100	10	**60×100×10**	
	110	8	**60×110×8**	
	110	8	**60×110×10**	
62	80	10	**62×80×10**	
	85	10	**62×85×10**	
	90	10	**62×90×10**	
63	85	10	**63×85×10**	
	90	10	**63×90×10**	
64	80	8	**64×80×8**	
65	80	8	**65×80×8**	
	85	8	**65×85×8**	
	85	10	**65×85×10**	•
	85	12	**65×85×12**	
	88	12	**65×88×12**	
	90	10	**65×90×10**	•
	95	10	**65×95×10**	
	97	7	**65×97×7**	
	100	10	**65×100×10**	
	110	10	**65×110×10**	
	120	12	**65×120×12**	
	140	12	**65×140×12**	
68	90	10	**68×90×10**	
70	85	8	**70×85×8**	

d_1 **70–250** mm

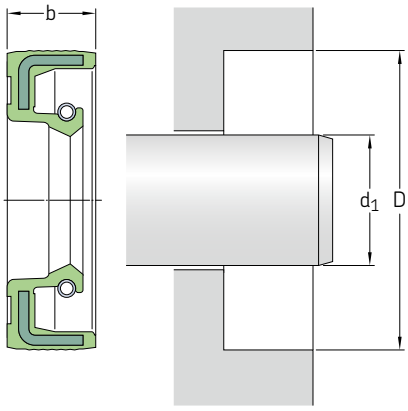

[1] Designation to be followed by the design and material codes, indicating one of the four variants available for each dimension:

HMS5 RG	without auxiliary lip, nitrile rubber
HMS5 V	without auxiliary lip, fluoro rubber
HMSA10 RG	with auxiliary lip, nitrile rubber
HMSA10 V	with auxiliary lip, fluoro rubber
Example:	**6×16×5 HMSA10 RG**

[2] Design execution differs from the basic design and is indicated by a number, see also **page 102**.

Please see **pages 85** and 8**6** for housing bore requirements.

Dimensions Shaft d_1	Bore D	Nominal seal width b	**Designation**[1]	**ISO / DIN**
mm			–	–
70 cont.	90	7	**70×90×72)**	
	90	10	**70×90×10**	•
	90	12	**70×90×12**	
	92	12	**70×92×12**	
	95	10	**70×95×10**	•
	100	10	**70×100×10**	
	110	10	**70×110×10**	
	110	12	**70×110×12**	
72	90	10	**72×90×10**	
	95	10	**72×95×10**	
	95	12	**72×95×12**	
	100	10	**72×100×10**	
	140	12	**72×140×12**	
75	90	10	**75×90×10**	
	95	10	**75×95×10**	•
	95	12	**75×95×12**	
	100	10	**75×100×10**	•
	100	12	**75×100×12**	
	105	10	**75×105×10**	
	110	12	**75×110×12**	
	120	12	**75×120×12**	
	130	12	**75×130×12**	
78	100	10	**78×100×10**	
80	95	10	**80×95×10**	
	100	10	**80×100×10**	•
	100	12	**80×100×12**	

Dimensions Shaft d_1	Bore D	Nominal seal width b	**Designation**[1]	**ISO / DIN**
mm			–	–
80 cont.	105	10	**80×105×10**	
	110	10	**80×110×10**	•
	110	12	**80×110×12**	
	115	12	**80×115×12**	
	125	12	**80×125×12**	
	170	13	**80×170×13**	
82	120	12	**82×120×12**	
	160	15	**82×160×15**	
85	100	9	**85×100×9**	
	100	10	**85×100×10**	
	105	12	**85×105×12**	
	110	12	**85×110×12**	•
	115	12	**85×115×12**	
	120	12	**85×120×12**	•
	130	12	**85×130×12**	
	140	12	**85×140×12**	
	150	12	**85×150×12**	
90	110	10	**90×110×10**	
	110	12	**90×110×12**	•
	115	12	**90×115×12**	
	120	12	**90×120×12**	•
95	110	12	**95×110×12**	
	115	12	**95×115×12**	
	120	12	**95×120×12**	•

Dimensions Shaft d_1	Bore D	Nominal seal width b	Designation[1)]	ISO / DIN
mm			–	–
95 cont.	125	12	**95×125×12**	•
	140	12	**95×140×12**	
	145	12	**95×145×12**	
	170	13	**95×170×13**	
100	120	10	**100×120×10**	
	120	12	**100×120×12**	•
	125	12	**100×125×12**	•
	130	12	**100×130×12**	•
	140	12	**100×140×12**	
	145	12	**100×145×12**	
	150	12	**100×150×12**	
105	130	12	**105×130×12**	•
	135	12	**105×135×12**	
	140	12	**105×140×12**	
108	140	15	**108×140×15**	•
	170	15	**108×170×15**	
110	130	12	**110×130×12**	•
	130	13	**110×130×13**	
	140	12	**110×140×12**	•
	150	12	**110×150×12**	
115	140	12	**115×140×12**	•
	145	12	**115×145×12**	
	150	12	**115×150×12**	
118	150	12	**118×150×12**	
120	140	12	**120×140×12**	
	140	13	**120×140×13**	
	150	12	**120×150×12**	
	160	12	**120×160×12**	
	180	15	**120×180×15**	
125	150	12	**125×150×12**	•
	160	15	**125×160×15**	
	200	15	**125×200×15**	
130	160	12	**130×160×12**	•
	160	15	**130×160×15**	
	170	12	**130×170×12**	
	180	12	**130×180×12**	
	190	12	**130×190×12**	

Dimensions Shaft d_1	Bore D	Nominal seal width b	Designation[1)]	ISO / DIN
mm			–	–
135	170	12	**135×170×12**	•
140	160	12	**140×160×12**	
	170	12	**140×170×12**	•
	170	15	**140×170×15**	
	180	12	**140×180×12**	
145	175	15	**145×175×15**	•
	180	12	**145×180×12**	
148	170	15	**148×170×15**	
150	170	12	**150×170×12**	
	180	12	**150×180×12**	
	180	15	**150×180×15**	•
	200	12	**150×200×12**	
155	180	15	**155×180×15**	
160	185	15	**160×185×15**	
	190	15	**160×190×15**	•
165	190	15	**165×190×15**	
170	200	15	**170×200×15**	•
175	200	15	**175×200×15**	
180	200	15	**180×200×15**	
	210	15	**180×210×15**	•
190	220	15	**190×220×15**	•
	225	15	**190×225×15**	
200	230	15	**200×230×15**	•
210	240	15	**210×240×15**	•
220	250	15	**220×250×15**	•
230	260	15	**230×260×15**	•
240	270	15	**240×270×15**	•
250	280	15	**250×280×15**	•
	285	15	**250×285×15**	

CRW1, CRWA1, CRWH1 and CRWHA1 seals

Fig. 3

CRW1

Fig. 4

CRWH1

Fig. 5

CRWA1

Fig. 6

CRWHA1

Main features

These radial shaft seals are low-friction seals with SKF Wave lip design for reduced heat generation. See **pages 68** and **69** for more information on SKF Wave lip design. They have a metal outside diameter for easy installation and a firm and accurate fit in the housing bore.

The seals feature SKF Bore Tite Coating on the outside diameter, a non-hardening, water-based acrylic sealant that helps fill small imperfections in the housing bore.

They are primarily designed to retain lubricants but are also suitable for contaminant exclusion, especially the CRWA1 and CRWHA1 seals designed with an auxiliary lip.

Design

- **CRW1:** Seal with a single steel case, SKF Wave lip and a carbon steel garter spring.
- **CRWH1:** Seal with a double steel case, SKF Wave lip and a carbon steel garter spring.
- **CRWA1:** Seal with a single steel case, SKF Wave lip, a carbon steel garter spring and an auxiliary, non-contacting lip.
- **CRWHA1:** Seal with a double steel case, SKF Wave lip, a carbon steel garter spring and an auxiliary, non-contacting lip.

All of these seals are available with sealing lips made of either nitrile rubber or the SKF developed fluoro rubber compound SKF Duralife. Other materials are also available on request.

See **matrix 1** on **pages 104** and **105** for permissible operating conditions.

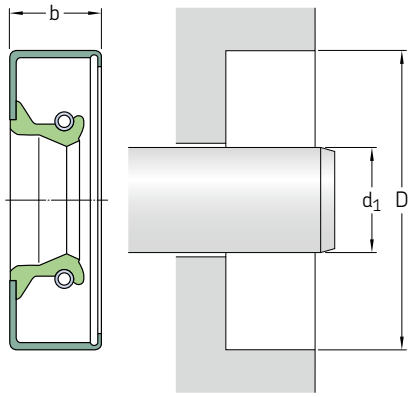

Please see **pages 83** to **86** for housing bore requirements.

Dimensions Shaft d_1	Bore D	Nominal seal width b	Design and lip material	Designation
mm			–	–
12	22	7	CRW1 V	**12×22×7 CRW1 V**
	22	7	CRW1 R	**12×22×7 CRW1 R**
	25	7	CRW1 R	**12×25×7 CRW1 R**
	26	7	CRW1 R	**12×26×7 CRW1 R**
	28	7	CRW1 R	**12×28×7 CRW1 R**
	28	7	CRW1 P	**12×28×7 CRW1 P**
	32	7	CRW1 R	**12×32×7 CRW1 R**
	32	7	CRW1 V	**12×32×7 CRW1 V**
	35	7	CRW1 R	**12×35×7 CRW1 R**
14	26	7	CRW1 V	**14×26×7 CRW1 V**
	32	7	CRW1 R	**14×32×7 CRW1 R**
15	25	7	CRW1 P	**15×25×7 CRW1 P**
	28	7	CRW1 R	**15×28×7 CRW1 R**
	32	7	CRW1 R	**15×32×7 CRW1 R**
	32	7	CRW1 V	**15×32×7 CRW1 V**
	35	7	CRW1 R	**15×35×7 CRW1 R**
	35	7	CRW1 P	**15×35×7 CRW1 P**
16	28	7	CRW1 R	**16×28×7 CRW1 R**
	30	7	CRW1 R	**16×30×7 CRW1 R**
	32	7	CRW1 R	**16×32×7 CRW1 R**
	35	7	CRW1 R	**16×35×7 CRW1 R**
	40	7	CRW1 R	**16×40×7 CRW1 R**
	40	7	CRWA1 R	**16×40×7 CRWA1 R**
17	27	6,35	CRW1 R	**17×27×6 CRW1 R**
	28	7	CRW1 R	**17×28×7 CRW1 R**
	28	7	CRW1 V	**17×28×7 CRW1 V**
	30	7	CRW1 R	**17×30×7 CRW1 R**
	32	7	CRW1 R	**17×32×7 CRW1 R**
	35	7	CRW1 R	**17×35×7 CRW1 R**
	35	7	CRW1 V	**17×35×7 CRW1 V**
	40	7	CRW1 R	**17×40×7 CRW1 R**
	47	7	CRW1 R	**17×47×7 CRW1 R**

Dimensions Shaft d_1	Bore D	Nominal seal width b	Design and lip material	Designation
mm			–	–
18	30	7	CRW1 R	**18×30×7 CRW1 R**
	30	7	CRW1 V	**18×30×7 CRW1 V**
	32	7	CRW1 R	**18×32×7 CRW1 R**
	32	7	CRW1 V	**18×32×7 CRW1 V**
	35	7	CRW1 R	**18×35×7 CRW1 R**
	40	7	CRW1 R	**18×40×7 CRW1 R**
19	35	7	CRW1 R	**19×35×7 CRW1 R**
20	30	7	CRW1 R	**20×30×7 CRW1 R**
	31	7	CRW1 R	**20×31×7 CRW1 R**
	32	7	CRW1 R	**20×32×7 CRW1 R**
	35	7	CRW1 R	**20×35×7 CRW1 R**
	35	7	CRW1 V	**20×35×7 CRW1 V**
	36	7	CRW1 R	**20×36×7 CRW1 R**
	36	7	CRW1 V	**20×36×7 CRW1 V**
	37	7	CRW1 R	**20×37×7 CRW1 R**
	38	7	CRW1 R	**20×38×7 CRW1 R**
	40	7	CRW1 R	**20×40×7 CRW1 R**
	40	7	CRW1 V	**20×40×7 CRW1 V**
	42	7	CRW1 R	**20×42×7 CRW1 R**
	47	7	CRW1 R	**20×47×7 CRW1 R**
	52	7	CRW1 R	**20×52×7 CRW1 R**
	52	7	CRW1 P	**20×52×7 CRW1 P**
21	35	7	CRW1 R	**21×35×7 CRW1 R**
	35	7	CRW1 V	**21×35×7 CRW1 V**
	40	8	CRW1 R	**21×40×8 CRW1 R**
22	31	7	CRW1 P	**22×31×7 CRW1 P**
	32	7	CRW1 R	**22×32×7 CRW1 R**
	35	7	CRW1 R	**22×35×7 CRW1 R**
	35	7	CRW1 V	**22×35×7 CRW1 V**
	38	7	CRW1 R	**22×38×7 CRW1 R**
	38	7	CRW1 V	**22×38×7 CRW1 V**
	40	6,35	CRW1 R	**22×40×6 CRW1 R**
	40	6,35	CRW1 V	**22×40×6 CRW1 V**

d_1 **22–40** mm

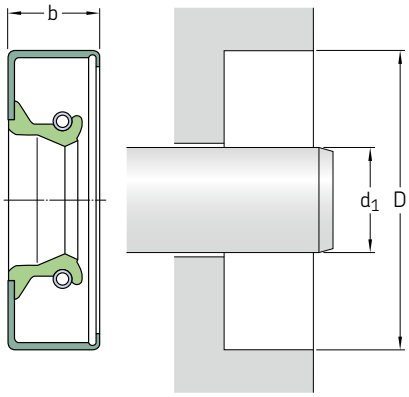

Please see **pages 83** to **86** for housing bore requirements.

Dimensions Shaft d_1	Bore D	Nominal seal width b	Design and lip material	Designation
mm			–	–
22 cont.	42	7	CRW1 R	**22×42×7 CRW1 R**
	47	8	CRW1 R	**22×47×8 CRW1 R**
	50	8	CRW1 R	**22×50×8 CRW1 R**
24	36	7	CRW1 V	**24×36×7 CRW1 V**
	38	7	CRW1 V	**24×38×7 CRW1 V**
	47	8	CRW1 R	**24×47×8 CRW1 R**
25	35	7	CRW1 R	**25×35×7 CRW1 R**
	35	7	CRW1 V	**25×35×7 CRW1 V**
	36	7	CRW1 R	**25×36×7 CRW1 R**
	37	7	CRW1 R	**25×37×7 CRW1 R**
	37	7	CRW1 V	**25×37×7 CRW1 V**
	38	7	CRW1 R	**25×38×7 CRW1 R**
	38	7	CRW1 V	**25×38×7 CRW1 V**
	40	7	CRW1 R	**25×40×7 CRW1 R**
	40	7	CRW1 R	**25×40×7 CRW1 R**
	40	7	CRW1 V	**25×40×7 CRW1 V**
	42	8	CRW1 V	**25×42×8 CRW1 V**
	42	8	CRW1 R	**25×42×8 CRW1 R**
	45	7	CRW1 R	**25×45×7 CRW1 R**
	47	6,35	CRW1 R	**25×47×6 CRW1 R**
	48	8	CRW1 R	**25×48×8 CRW1 R**
	48	8	CRW1 V	**25×48×8 CRW1 V**
	50	8	CRW1 R	**25×50×8 CRW1 R**
	52	8	CRW1 R	**25×52×8 CRW1 R**
	52	8	CRW1 V	**25×52×8 CRW1 V**
	62	7	CRW1 R	**25×62×7 CRW1 R**
	62	7	CRW1 V	**25×62×7 CRW1 V**
27	42	7	CRW1 R	**27×42×7 CRW1 R**
	42	7	CRW1 V	**27×42×7 CRW1 V**
	43	8	CRW1 V	**27×43×8 CRW1 V**
	45	8	CRW1 V	**27×45×8 CRW1 V**
	52	8	CRW1 R	**27×52×8 CRW1 R**

Dimensions Shaft d_1	Bore D	Nominal seal width b	Design and lip material	Designation
mm			–	–
28	40	7	CRW1 R	**28×40×7 CRW1 R**
	40	7	CRW1 V	**28×40×7 CRW1 V**
	42	7	CRW1 R	**28×42×7 CRW1 R**
	42	7	CRW1 V	**28×42×7 CRW1 V**
	45	7	CRW1 V	**28×45×7 CRW1 V**
	47	7	CRW1 V	**28×47×7 CRW1 V**
	47	8	CRW1 R	**28×47×8 CRW1 R**
	52	8	CRW1 R	**28×52×8 CRW1 R**
30	40	7	CRW1 R	**30×40×7 CRW1 R**
	40	7	CRW1 V	**30×40×7 CRW1 V**
	42	7	CRW1 R	**30×42×7 CRW1 R**
	42	7	CRW1 V	**30×42×7 CRW1 V**
	45	8	CRW1 R	**30×45×8 CRW1 R**
	45	8	CRW1 P	**30×45×8 CRW1 P**
	47	7	CRW1 R	**30×47×7 CRW1 R**
	47	8	CRW1 V	**30×47×8 CRW1 V**
	48	8	CRW1 R	**30×48×8 CRW1 R**
	50	8	CRW1 R	**30×50×8 CRW1 R**
	50	8	CRW1 V	**30×50×8 CRW1 V**
	52	8	CRW1 R	**30×52×8 CRW1 R**
	55	7	CRW1 R	**30×55×7 CRW1 R**
	56	8	CRW1 R	**30×56×8 CRW1 R**
	58	8	CRWA1 R	**30×58×8 CRWA1 R**
	60	8	CRW1 R	**30×60×8 CRW1 R**
	62	7	CRW1 R	**30×62×7 CRW1 R**
	62	7	CRW1 V	**30×62×7 CRW1 V**
	72	8	CRW1 R	**30×72×8 CRW1 R**
	72	12	CRWA1 V	**30×72×12 CRWA1 V**
32	42	7	CRW1 R	**32×42×7 CRW1 R**
	42	7	CRW1 V	**32×42×7 CRW1 V**
	45	8	CRW1 R	**32×45×8 CRW1 R**
	47	8	CRW1 R	**32×47×8 CRW1 R**
	47	8	CRW1 V	**32×47×8 CRW1 V**

[1] Without SKF Bore Tite Coating

Dimensions Shaft d_1	Bore D	Nominal seal width b	Design and lip material	Designation
mm			–	–
32 cont.	48	8	CRW1 R	**32×48×8 CRW1 R**
	48	8	CRW1 V	**32×48×8 CRW1 V**
	50	8	CRW1 R	**32×50×8 CRW1 R**
	50	8	CRW1 V	**32×50×8 CRW1 V**
	52	8	CRW1 R	**32×52×8 CRW1 R**
	52	8	CRW1 V	**32×52×8 CRW1 V**
	56	8	CRW1 R	**32×56×8 CRW1 R**
	62	6,35	CRW1 R	**32×62×6 CRW1 R**
34	48	8	CRW1 R	**34×48×8 CRW1 R**
	48	8	CRW1 V	**34×48×8 CRW1 V**
	55	8	CRW1 R	**34×55×8 CRW1 R**
	56	8	CRW1 R	**34×56×8 CRW1 R**
	56	8	CRW1 V	**34×56×8 CRW1 V**
	62	8	CRW1 R	**34×62×8 CRW1 R**
35	47	7	CRW1 R	**35×47×7 CRW1 R**
	47	7	CRW1 V	**35×47×7 CRW1 V**
	48	8	CRW1 R	**35×48×8 CRW1 R**
	48	8	CRW1 V	**35×48×8 CRW1 V**
	50	8	CRW1 R	**35×50×8 CRW1 R**
	50	8	CRW1 V	**35×50×8 CRW1 V**
	52	8	CRWA1 P	**35×52×8 CRWA1 P**
	52	8	CRW1 R	**35×52×8 CRW1 R**
	52	8	CRWA1 R	**35×52×8 CRWA1 R**
	54	7	CRW1 R	**35×54×7 CRW1 R**
	54	8	CRW1 V	**35×54×8 CRW1 V**
	55	8	CRW1 R	**35×55×8 CRW1 R**
	55	8	CRW1 V	**35×55×8 CRW1 V**[1)]
	56	8	CRW1 R	**35×56×8 CRW1 R**
	56	8	CRW1 V	**35×56×8 CRW1 V**
	62	8	CRW1 V	**35×62×8 CRW1 V**
	62	8	CRW1 R	**35×62×8 CRW1 R**
	64	8	CRW1 R	**35×64×8 CRW1 R**
	65	8	CRW1 V	**35×65×8 CRW1 V**
	68	8	CRW1 R	**35×68×8 CRW1 R**
	68	8	CRW1 V	**35×68×8 CRW1 V**
	69	8	CRW1 R	**35×69×8 CRW1 R**
	72	8	CRW1 V	**35×72×8 CRW1 V**
	72	8	CRW1 R	**35×72×8 CRW1 R**
	72	8	CRWA1 R	**35×72×8 CRWA1 R**
	78	8	CRW1 R	**35×78×8 CRW1 R**
	80	8	CRW1 R	**35×80×8 CRW1 R**
36	50	7	CRW1 R	**36×50×7 CRW1 R**
	50	8	CRW1 R	**36×50×8 CRW1 R**
	52	8	CRW1 R	**36×52×8 CRW1 R**
	52	8	CRW1 V	**36×52×8 CRW1 V**
	54	8	CRW1 R	**36×54×8 CRW1 R**
	54	8	CRW1 V	**36×54×8 CRW1 V**
	58	8	CRW1 R	**36×58×8 CRW1 R**
	60	8	CRW1 R	**36×60×8 CRW1 R**
	60	8	CRW1 V	**36×60×8 CRW1 V**
	62	8	CRW1 R	**36×62×8 CRW1 R**
	65	8	CRW1 R	**36×65×8 CRW1 R**
	68	8	CRW1 R	**36×68×8 CRW1 R**

Dimensions Shaft d_1	Bore D	Nominal seal width b	Design and lip material	Designation
mm			–	–
38	50	7	CRW1 R	**38×50×7 CRW1 R**
	50	7	CRW1 V	**38×50×7 CRW1 V**
	52	8	CRW1 R	**38×52×8 CRW1 R**
	52	8	CRWA1 R	**38×52×8 CRWA1 R**
	52	8	CRW1 V	**38×52×8 CRW1 V**
	53	8	CRW1 R	**38×53×8 CRW1 R**
	54	7	CRW1 P	**38×54×7 CRW1 P**[1)]
	55	8	CRW1 R	**38×55×8 CRW1 R**
	55	8	CRW1 V	**38×55×8 CRW1 V**
	56	8	CRW1 V	**38×56×8 CRW1 V**
	56	8	CRW1 R	**38×56×8 CRW1 R**
	58	8	CRW1 R	**38×58×8 CRW1 R**
	58	8	CRW1 V	**38×58×8 CRW1 V**
	60	8	CRW1 R	**38×60×8 CRW1 R**
	60	8	CRW1 V	**38×60×8 CRW1 V**
	62	8	CRW1 R	**38×62×8 CRW1 R**
	62	8	CRWA1 R	**38×62×8 CRWA1 R**
	62	8	CRW1 V	**38×62×8 CRW1 V**
	65	8	CRW1 R	**38×65×8 CRW1 R**
	68	8	CRW1 R	**38×68×8 CRW1 R**
	70	8	CRW1 R	**38×70×8 CRW1 R**
	72	8	CRW1 R	**38×72×8 CRW1 R**
	73	8	CRW1 R	**38×73×8 CRW1 R**
	74	11	CRWA1 R	**38×74×11 CRWA1 R**
	74	11	CRW1 V	**38×74×11 CRW1 V**
	80	8	CRW1 R	**38×80×8 CRW1 R**
	90	8	CRWA1 R	**38×90×8 CRWA1 R**
40	52	7	CRW1 V	**40×52×7 CRW1 V**
	52	7	CRW1 R	**40×52×7 CRW1 R**
	54	7	CRW1 R	**40×54×7 CRW1 R**
	55	8	CRW1 R	**40×55×8 CRW1 R**
	55	8	CRW1 V	**40×55×8 CRW1 V**
	56	7	CRW1 V	**40×56×7 CRW1 V**
	56	8	CRW1 R	**40×56×8 CRW1 R**
	57	8	CRW1 R	**40×57×8 CRW1 R**
	58	8	CRW1 R	**40×58×8 CRW1 R**
	58	8	CRW1 V	**40×58×8 CRW1 V**
	60	8	CRW1 R	**40×60×8 CRW1 R**
	60	8	CRW1 V	**40×60×8 CRW1 V**
	62	8	CRW1 R	**40×62×8 CRW1 R**
	62	8	CRW1 V	**40×62×8 CRW1 V**
	65	8	CRW1 R	**40×65×8 CRW1 R**
	68	8	CRW1 R	**40×68×8 CRW1 R**
	70	8	CRW1 R	**40×70×8 CRW1 R**
	72	8	CRW1 R	**40×72×8 CRW1 R**
	74	8	CRW1 R	**40×74×8 CRW1 R**
	75	8	CRW1 V	**40×75×8 CRW1 V**
	80	8	CRW1 R	**40×80×8 CRW1 R**
	80	8	CRW1 V	**40×80×8 CRW1 V**[1)]
	90	8	CRW1 R	**40×90×8 CRW1 R**

d_1 **41–70** mm

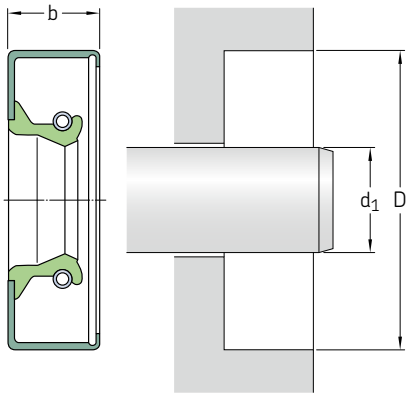

Please see **pages 83** to **86** for housing bore requirements.

Dimensions Shaft d_1	Bore D	Nominal seal width b	Design and lip material	Designation
mm			–	–
41	53	7	CRW1 R	**41×53×7 CRW1 R**
	55	8	CRW1 R	**41×55×8 CRW1 R**
	62	8	CRW1 R	**41×62×8 CRW1 R**
42	55	8	CRW1 R	**42×55×8 CRW1 R**
	55	8	CRW1 V	**42×55×8 CRW1 V**
	56	7	CRW1 V	**42×56×7 CRW1 V**
	56	8	CRW1 R	**42×56×8 CRW1 R**
	58	8	CRW1 R	**42×58×8 CRW1 R**
	58	8	CRW1 V	**42×58×8 CRW1 V**
	60	8	CRW1 R	**42×60×8 CRW1 R**
	60	8	CRW1 V	**42×60×8 CRW1 V**
	62	8	CRW1 R	**42×62×8 CRW1 R**
	62	8	CRW1 V	**42×62×8 CRW1 V**
	65	8	CRW1 R	**42×65×8 CRW1 R**
	65	8	CRW1 V	**42×65×8 CRW1 V**
	72	8	CRW1 V	**42×72×8 CRW1 V**
	72	8	CRW1 R	**42×72×8 CRW1 R**
43	57	8	CRW1 R	**43×57×8 CRW1 R**
	60	8	CRW1 R	**43×60×8 CRW1 R**
	69	8	CRW1 R	**43×69×8 CRW1 R**
	73	8	CRW1 R	**43×73×8 CRW1 R**
44	60	8	CRW1 R	**44×60×8 CRW1 R**
	60	8	CRW1 V	**44×60×8 CRW1 V**[1]
	62	8	CRW1 R	**44×62×8 CRW1 R**
	65	8	CRW1 R	**44×65×8 CRW1 R**
	68	8	CRW1 V	**44×68×8 CRW1 V**
	70	8	CRW1 R	**44×70×8 CRW1 R**
	72	8	CRW1 R	**44×72×8 CRW1 R**
45	60	8	CRW1 R	**45×60×8 CRW1 R**
	60	8	CRW1 V	**45×60×8 CRW1 V**
45 cont.	62	8	CRWA1 V	**45×62×8 CRWA1 V**
	62	8	CRW1 R	**45×62×8 CRW1 R**
	65	8	CRW1 R	**45×65×8 CRW1 R**
	65	8	CRW1 V	**45×65×8 CRW1 V**
	68	8	CRW1 R	**45×68×8 CRW1 R**
	68	8	CRW1 V	**45×68×8 CRW1 V**
	68	8	CRWA1 R	**45×68×8 CRWA1 R**
	72	8	CRW1 V	**45×72×8 CRW1 V**
	72	8	CRW1 R	**45×72×8 CRW1 R**
	75	8	CRW1 R	**45×75×8 CRW1 R**
	75	8	CRW1 V	**45×75×8 CRW1 V**
	80	8	CRW1 R	**45×80×8 CRW1 R**
	85	8	CRW1 R	**45×85×8 CRW1 R**
46	60	8	CRW1 R	**46×60×8 CRW1 R**
	65	8	CRW1 R	**46×65×8 CRW1 R**
	68	8	CRW1 R	**46×68×8 CRW1 R**
	72	8	CRW1 R	**46×72×8 CRW1 R**
	73	8	CRW1 R	**46×73×8 CRW1 R**
47	60	7	CRW1 R	**47×60×7 CRW1 R**
	62	8	CRW1 R	**47×62×8 CRW1 R**
	72	8	CRW1 R	**47×72×8 CRW1 R**
48	62	8	CRW1 R	**48×62×8 CRW1 R**
	62	8	CRW1 P	**48×62×8 CRW1 P**
	65	8	CRW1 R	**48×65×8 CRW1 R**
	65	8	CRW1 V	**48×65×8 CRW1 V**
	68	8	CRW1 V	**48×68×8 CRW1 V**
	70	8	CRW1 R	**48×70×8 CRW1 R**
	70	8	CRW1 V	**48×70×8 CRW1 V**
	72	8	CRW1 R	**48×72×8 CRW1 R**
	72	8	CRW1 V	**48×72×8 CRW1 V**
	80	8	CRW1 R	**48×80×8 CRW1 R**
50	65	8	CRW1 R	**50×65×8 CRW1 R**

[1] Without SKF Bore Tite Coating

Dimensions Shaft d_1	Bore D	Nominal seal width b	Design and lip material	Designation
mm			–	–
	65	8	CRW1 V	**50×65×8 CRW1 V**
	68	8	CRW1 R	**50×68×8 CRW1 R**
	68	8	CRW1 V	**50×68×8 CRW1 V**
	70	8	CRW1 R	**50×70×8 CRW1 R**
	70	8	CRW1 V	**50×70×8 CRW1 V**
	72	8	CRW1 R	**50×72×8 CRW1 R**
	72	8	CRW1 V	**50×72×8 CRW1 V**
	75	8	CRWA1 R	**50×75×8 CRWA1 R**
	80	8	CRW1 R	**50×80×8 CRW1 R**
	80	8	CRW1 V	**50×80×8 CRW1 V**
	82	8	CRWA1 R	**50×82×8 CRWA1 R**
	85	8	CRW1 R	**50×85×8 CRW1 R**
	90	8	CRW1 R	**50×90×8 CRW1 R**
	90	8	CRW1 V	**50×90×8 CRW1 V**
51	65	7	CRWA1 R	**51×65×7 CRWA1 R**
	73	8	CRW1 R	**51×73×8 CRW1 R**
	80	9,53	CRW1 R	**51×80×10 CRW1 R**
	81	9,53	CRWH1 R	**51×81×10 CRWH1 R**
	81	9,53	CRWHA1 R	**51×81×10 CRWHA1 R**
	92	11,13	CRWH1 R	**51×92×11 CRWH1 R**
52	68	8	CRW1 R	**52×68×8 CRW1 R**
	68	8	CRW1 V	**52×68×8 CRW1 V**
	70	8	CRW1 R	**52×70×8 CRW1 R**
	72	8	CRWA1 V	**52×72×8 CRWA1 V**
	72	8	CRW1 R	**52×72×8 CRW1 R**
	72	8	CRW1 V	**52×72×8 CRW1 V**
	85	8	CRW1 R	**52×85×8 CRW1 R**
53	68	8	CRW1 V	**53×68×8 CRW1 V**
54	65	8	CRW1 R	**54×65×8 CRW1 R**
	65	8	CRW1 V	**54×65×8 CRW1 V**
	73	11,13	CRW1 R	**54×73×11 CRW1 R**
	73	11,13	CRWA1 R	**54×73×11 CRWA1 R**
	81	9,53	CRWA1 R	**54×81×10 CRWA1 R**
55	70	8	CRW1 R	**55×70×8 CRW1 R**
	70	8	CRW1 V	**55×70×8 CRW1 V**
	72	8	CRW1 R	**55×72×8 CRW1 R**
	72	8	CRW1 V	**55×72×8 CRW1 V**
	73	8	CRW1 V	**55×73×8 CRW1 V**
	75	8	CRW1 R	**55×75×8 CRW1 R**
	75	8	CRW1 V	**55×75×8 CRW1 V**
	80	8	CRW1 R	**55×80×8 CRW1 R**
	80	8	CRW1 V	**55×80×8 CRW1 V**
	85	8	CRW1 R	**55×85×8 CRW1 R**
	90	8	CRW1 R	**55×90×8 CRW1 R**
	100	8	CRW1 R	**55×100×8 CRW1 R**
56	75	8	CRW1 R	**56×75×8 CRW1 R**
57	81	11	CRW1 R	**57×81×11 CRW1 R**
	81	11	CRWA1 P	**57×81×11 CRWA1 P**
57 cont.	92	11	CRWH1 R	**57×92×11 CRWH1 R**
	92	11	CRWHA1 R	**57×92×11 CRWHA1 R**
58	72	8	CRW1 R	**58×72×8 CRW1 R**
	72	8	CRW1 S	**58×72×8 CRW1 S**
	75	8	CRW1 R	**58×75×8 CRW1 R**
	80	8	CRW1 R	**58×80×8 CRW1 R**
	80	8	CRW1 V	**58×80×8 CRW1 V**
	85	8	CRW1 R	**58×85×8 CRW1 R**
	90	8	CRW1 R	**58×90×8 CRW1 R**
60	75	8	CRW1 R	**60×75×8 CRW1 R**
	75	8	CRW1 V	**60×75×8 CRW1 V**
	80	8	CRW1 R	**60×80×8 CRW1 R**
	80	8	CRW1 V	**60×80×8 CRW1 V**
	82	8	CRWA1 R	**60×82×8 CRWA1 R**
	85	8	CRW1 V	**60×85×8 CRW1 V**
	85	8	CRW1 R	**60×85×8 CRW1 R**
	90	8	CRW1 R	**60×90×8 CRW1 R**
	105	8	CRW1 R	**60×105×8 CRW1 R**
	110	8	CRW1 R	**60×110×8 CRW1 R**
62	80	8	CRW1 V	**62×80×8 CRW1 V**
	85	8	CRW1 R	**62×85×8 CRW1 R**
	90	8	CRW1 R	**62×90×8 CRW1 R**
	90	11,13	CRWH1 R	**62×90×11 CRWH1 R**
63	78	8	CRW1 R	**63×78×8 CRW1 R**
	80	8	CRW1 R	**63×80×8 CRW1 R**
	85	8	CRW1 R	**63×85×8 CRW1 R**
	88	8	CRW1 R	**63×88×8 CRW1 R**
65	80	8	CRW1 R	**65×80×8 CRW1 R**
	80	8	CRW1 V	**65×80×8 CRW1 V**
	85	8	CRW1 R	**65×85×8 CRW1 R**
	85	8	CRW1 V	**65×85×8 CRW1 V**
	88	8	CRW1 R	**65×88×8 CRW1 R**
	90	8	CRW1 R	**65×90×8 CRW1 R**
	90	8	CRW1 V	**65×90×8 CRW1 V**
	92	11,13	CRWH1 R	**65×92×11 CRWH1 R**
	100	8	CRW1 R	**65×100×8 CRW1 R**
	100	8	CRW1 V	**65×100×8 CRW1 V**
	110	10	CRW1 R	**65×110×10 CRW1 R**
	120	8	CRW1 R	**65×120×8 CRW1 R**
68	85	8	CRW1 R	**68×85×8 CRW1 R**
	88	8	CRW1 R	**68×88×8 CRW1 R**
	90	8	CRW1 R	**68×90×8 CRW1 R**
	90	8	CRW1 V	**68×90×8 CRW1 V**
	95	10	CRW1 R	**68×95×10 CRW1 R**
	95	10	CRW1 V	**68×95×10 CRW1 V**
	100	10	CRW1 R	**68×100×10 CRW1 R**
70	85	8	CRW1 R	**70×85×8 CRW1 R**
	88	8	CRW1 R	**70×88×8 CRW1 R**
	88	8	CRW1 V	**70×88×8 CRW1 V**

d_1 **70–280** mm

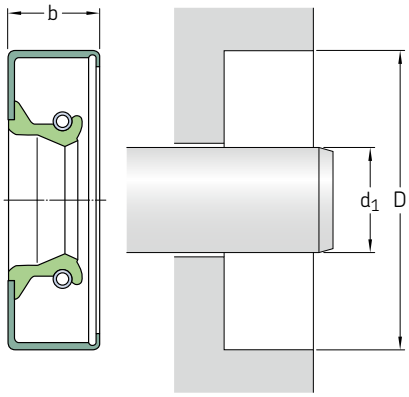

Please see **pages 83** to **86** for housing bore requirements.

Dimensions Shaft d_1	Bore D	Nominal seal width b	Design and lip material	Designation
mm			–	–
70 cont.	90	8	CRW1 R	**70×90×8 CRW1 R**
	90	10	CRW1 V	**70×90×10 CRW1 V**
	90	10	CRWHA1 P	**70×90×10 CRWHA1 P**
	92	11	CRWH1 R	**70×92×11 CRWH1 R**
	92	11	CRWH1 V	**70×92×11 CRWH1 V**
	95	10	CRW1 R	**70×95×10 CRW1 R**
	100	10	CRW1 R	**70×100×10 CRW1 R**
	105	10	CRW1 R	**70×105×10 CRW1 R**
	110	10	CRW1 R	**70×110×10 CRW1 R**
	110	12,70	CRWHA1 R	**70×110×13 CRWHA1 R**[1]
72	88	8	CRW1 R	**72×88×8 CRW1 R**
73	92	11,13	CRWH1 R	**73×92×11 CRWH1 R**
	110	11,13	CRWA1 P	**73×110×11 CRWA1 P**
75	90	8	CRW1 R	**75×90×8 CRW1 R**
	95	10	CRW1 R	**75×95×10 CRW1 R**
	95	10	CRW1 V	**75×95×10 CRW1 V**
	100	10	CRW1 R	**75×100×10 CRW1 R**
	100	10	CRW1 V	**75×100×10 CRW1 V**
	105	10	CRW1 R	**75×105×10 CRW1 R**
	110	10	CRW1 R	**75×110×10 CRW1 R**
	115	12	CRW1 R	**75×115×12 CRW1 R**
80	100	10	CRW1 R	**80×100×10 CRW1 R**
	100	10	CRW1 V	**80×100×10 CRW1 V**
	105	10	CRW1 R	**80×105×10 CRW1 R**
	105	10	CRW1 V	**80×105×10 CRW1 V**
	110	10	CRW1 R	**80×110×10 CRW1 R**
	125	10	CRW1 R	**80×125×10 CRW1 R**
	125	10	CRW1 V	**80×125×10 CRW1 V**
	130	12	CRWA1 R	**80×130×12 CRWA1 R**
	140	12	CRW1 R	**80×140×12 CRW1 R**
84	127	11	CRWH1 R	**84×127×11 CRWH1 R**
85	105	10	CRW1 R	**85×105×10 CRW1 R**
	105	10	CRW1 V	**85×105×10 CRW1 V**
	110	10	CRW1 R	**85×110×10 CRW1 R**
	110	10	CRWA1 V	**85×110×10 CRWA1 V**
	120	12	CRW1 R	**85×120×12 CRW1 R**
	130	12	CRW1 R	**85×130×12 CRW1 R**
89	127	11,13	CRWH1 R	**89×127×11 CRWH1 R**
90	110	12	CRW1 R	**90×110×12 CRW1 R**
	110	12	CRW1 V	**90×110×12 CRW1 V**
	115	12	CRWA1 R	**90×115×12 CRWA1 R**
	120	12	CRW1 R	**90×120×12 CRW1 R**
	120	12	CRW1 V	**90×120×12 CRW1 V**
	125	12	CRW1 R	**90×125×12 CRW1 R**
	125	12	CRW1 V	**90×125×12 CRW1 V**
	130	12	CRW1 R	**90×130×12 CRW1 R**
	140	12	CRWA1 R	**90×140×12 CRWA1 R**
92	127	11	CRWHA1 R	**92×127×11 CRWHA1 R**
	127	11,13	CRWH1 R	**92×127×11 CRWH1 R**
95	110	10	CRW1 R	**95×110×10 CRW1 R**
	115	12	CRW1 R	**95×115×12 CRW1 R**
	115	12	CRW1 V	**95×115×12 CRW1 V**
	120	12	CRW1 R	**95×120×12 CRW1 R**
	120	12	CRW1 V	**95×120×12 CRW1 V**
	120	12	CRWA1 V	**95×120×12 CRWA1 V**
	125	12	CRW1 R	**95×125×12 CRW1 R**
	130	12	CRW1 R	**95×130×12 CRW1 R**
	130	12	CRW1 V	**95×130×12 CRW1 V**
98	120	12	CRW1 V	**98×120×12 CRW1 V**
100	120	12	CRW1 R	**100×120×12 CRW1 R**
	120	12	CRW1 V	**100×120×12 CRW1 V**

[1] Without SKF Bore Tite Coating

Dimensions Shaft d_1	Bore D	Nominal seal width b	Design and lip material	Designation
mm			–	–
100 cont.	125	12	CRW1 R	**100×125×12 CRW1 R**
	125	12	CRW1 V	**100×125×12 CRW1 V**
	127	11,13	CRWH1 R	**100×127×11 CRWH1 R**
	130	12	CRW1 R	**100×130×12 CRW1 R**
	135	12	CRWA1 R	**100×135×12 CRWA1 R**
	140	12	CRWA1 R	**100×140×12 CRWA1 R**
105	127	11,13	CRWH1 R	**105×127×11 CRWH1 R**
	130	12	CRW1 R	**105×130×12 CRW1 R**
	130	12	CRW1 V	**105×130×12 CRW1 V**
	135	12	CRWA1 R	**105×135×12 CRWA1 R**
	140	12	CRWA1 R	**105×140×12 CRWA1 R**
	160	12	CRW1 R	**105×160×12 CRW1 R**
110	130	12	CRW1 R	**110×130×12 CRW1 R**
	130	12	CRW1 V	**110×130×12 CRW1 V**
	135	12	CRW1 V	**110×135×12 CRW1 V**
	140	12	CRW1 V	**110×140×12 CRW1 V**
	140	12	CRW1 R	**110×140×12 CRW1 R**
	145	12	CRW1 R	**110×145×12 CRW1 R**
	160	12	CRWH1 R	**110×160×12 CRWH1 R**
115	135	12	CRW1 R	**115×135×12 CRW1 R**
	140	12	CRW1 R	**115×140×12 CRW1 R**
	140	12	CRW1 V	**115×140×12 CRW1 V**
	145	12	CRW1 R	**115×145×12 CRW1 R**
	150	12	CRW1 R	**115×150×12 CRW1 R**
	160	12	CRW1 R	**115×160×12 CRW1 R**
120	140	12	CRWA1 R	**120×140×12 CRWA1 R**
	145	12	CRW1 R	**120×145×12 CRW1 R**
	150	12	CRW1 R	**120×150×12 CRW1 R**
	160	12	CRWH1 R	**120×160×12 CRWH1 R**
125	150	12	CRW1 R	**125×150×12 CRW1 R**
	150	12	CRW1 V	**125×150×12 CRW1 V**
	160	12	CRW1 R	**125×160×12 CRW1 R**
130	160	12	CRW1 R	**130×160×12 CRW1 R**
	160	12	CRW1 V	**130×160×12 CRW1 V**
	170	12	CRW1 R	**130×170×12 CRW1 R**
140	160	12	CRW1 R	**140×160×12 CRW1 R**
	170	12	CRW1 R	**140×170×12 CRW1 R**
	170	12	CRW1 V	**140×170×12 CRW1 V**[1)]
143	181	12,70	CRWHA1 R	**143×181×13 CRWHA1 R**
160	190	15	CRW1 V	**160×190×15 CRW1 V**
162	200	14,30	CRWHA1 R	**162×200×14 CRWHA1 R**
	200	15,88	CRWH1 R	**162×200×16 CRWH1 R**
188	215	16	CRWH1 R	**188×215×16 CRWH1 R**
203	254	15,88	CRWHA1 R	**203×254×16 CRWHA1 R**[1)]
216	254	15,88	CRWH1 R	**216×254×16 CRWH1 R**
220	250	16	CRWH1 R	**220×250×16 CRWH1 R**
280	320	20	CRWA1 R	**280×320×20 CRWA1 R**
	320	20	CRWA1 V	**280×320×20 CRWA1 V**

d_1 **0.250–0.938** in

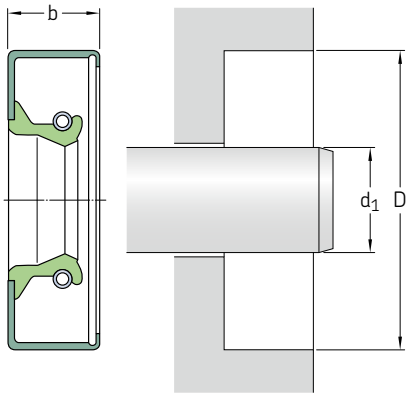

Please see **pages 83** to **86** for housing bore requirements.

Dimensions Shaft d_1	Bore D	Nominal seal width b	**Design and lip material**	**Designation**
in			–	–
0.250	0.749	0.250	**CRW1 V**	**2513**[1]
	0.749	0.250	**CRW1 R**	**2514**
0.375	0.749	0.250	**CRW1 R**	**3687**[1]
	0.749	0.250	**CRW1 V**	**3688**
	0.750	0.250	**CRWA1 R**	**3680**
	0.836	0.188	**CRW1 P**	**3719**
	0.875	0.250	**CRW1 R**	**3725**
	0.999	0.250	**CRW1 R**	**3751**[1]
	0.999	0.250	**CRW1 V**	**3752**
	1.124	0.250	**CRW1 R**	**3806**[1]
0.438	0.875	0.250	**CRW1 P**	**4249**
	0.875	0.250	**CRW1 R**	**4251**[1]
	0.875	0.375	**CRWA1 R**	**4261**[1]
	0.875	0.375	**CRWA1 V**	**4262**
	0.999	0.250	**CRW1 V**	**4356**
	0.999	0.375	**CRW1 P**	**4353**
	0.999	0.375	**CRW1 R**	**4355**
	1.124	0.250	**CRW1 R**	**4390**
0.500	0.875	0.250	**CRW1 R**	4931
	0.875	0.250	**CRW1 V**	**4932**
	0.875	0.250	**CRWA1 V**	**4933**
	0.875	0.250	**CRWA1 V**	**4935**
	0.875	0.250	**CRW1 D**	**4936**
	0.875	0.313	**CRWA1 R**	**4939**
	0.987	0.250	**CRW1 R**	**4943**
	0.999	0.250	**CRW1 V**	**4980**
	0.999	0.250	**CRW1 R**	**4984**
	0.999	0.250	**CRWA1 R**	**4985**
	1.124	0.250	**CRW1 P**	**5045**
	1.124	0.250	**CRWA1 R**	**5062**
	1.124	0.250	**CRW1 V**	**5066**
0.500	1.124	0.250	**CRWA1 V**	**5067**
	1.124	0.250	**CRW1 R**	**5068**
	1.124	0.313	**CRW1 P**	**5046**

Dimensions Shaft d_1	Bore D	Nominal seal width b	**Design and lip material**	**Designation**
in			–	–
0.500 cont.	1.250	0.250	**CRW1 R**	**5133**
	1.375	0.250	**CRW1 R**	**5150**
	1.375	0.250	**CRW1 V**	**5151**
0.531	0.999	0.250	**CRWA1 S**	**5321**
0.546	0.875	0.250	**CRW1 P**	**5385**[1]
0.554	0.999	0.250	**CRW1 R**	**5605**
0.563	0.875	0.188	**CRW1 D**	**5523**
	0.999	0.250	**CRW1 R**	**5541**
	0.999	0.250	**CRW1 V**	**5542**
	0.999	0.250	**CRW1 R**	**5543**
	0.999	0.250	**CRWA1 R**	**5606**
	1.124	0.250	**CRW1 V**	**5650**
	1.124	0.250	**CRW1 R**	**5652**
	1.124	0.250	**CRWA1 R**	**5662**
	1.250	0.250	**CRW1 R**	**5707**
	1.375	0.250	**CRW1 R**	**5756**
0.594	1.124	0.313	**CRW1 R**	**5926**
	1.124	0.313	**CRW1 V**	**5927**
0.625	0.987	0.250	**CRW1 R**	**6134**
	0.999	0.250	**CRWA1 V**	**6139**
	0.999	0.250	**CRWA1 R**	**6141**
	0.999	0.250	**CRW1 R**	**6143**
	1.063	0.250	**CRW1 R**	**6157**
	1.124	0.250	**CRW1 R**	**6903**
	1.124	0.250	**CRWA1 R**	**6904**
	1.124	0.250	**CRW1 V**	**6823**
	1.124	0.250	**CRWA1 V**	**6825**
	1.181	0.250	**CRWA1 R**	**6247**
	1.181	0.256	**CRWA1 V**	6248
	1.250	0.250	**CRW1 V**	**6909**
	1.250	0.250	**CRW1 R**	**6925**
	1.250	0.250	**CRWA1 R**	**6916**

[1] Without SKF Bore Tite Coating

Dimensions Shaft d_1	Bore D	Nominal seal width b	Design and lip material	Designation
in			–	–
0.625 cont.	1.375	0.250	**CRW1 R**	**6372**
	1.375	0.250	**CRWA1 R**	**6373**
	1.375	0.250	**CRW1 V**	**6979**
	1.375	0.250	**CRWA1 V**	**6383**
	1.377	0.250	**CRWHA1 R**	**6391**
	1.499	0.250	**CRW1 R**	**6422**
0.656	1.124	0.313	**CRW1 R**	**6523**
	1.250	0.250	**CRW1 R**	**6541**
	1.375	0.313	**CRW1 R**	**6556**
	1.575	0.250	**CRW1 R**	**6582**
0.669	0.999	0.188	**CRW1 R**	**6595**
	1.064	0.250	**CRW1 R**	**6728**
	1.064	0.250	**CRW1 R**	**6729**
	1.573	0.281	**CRW1 V**	**6597**[1)]
0.688	1.124	0.190	**CRW1 R**	**6738**
	1.124	0.250	**CRW1 R**	**6741**
	1.124	0.250	**CRW1 R**	**6743**
	1.124	0.250	**CRW1 V**	**6745**
	1.187	0.188	**CRW1 V**	**6770**
	1.188	0.188	**CRW1 R**	**6763**
	1.250	0.256	**CRWA1 R**	**6765**
	1.250	0.256	**CRWHA1 V**	**6751**
	1.250	0.313	**CRW1 R**	**6767**
	1.250	0.313	**CRW1 V**	**6768**
	1.252	0.220	**CRWH1 V**	6769
	1.375	0.250	**CRWA1 R**	**6814**
	1.375	0.313	**CRW1 R**	**6816**
	1.375	0.313	**CRW1 V**	**6817**
	1.499	0.250	**CRW1 R**	**6935**
	1.624	0.250	**CRWA1 R**	**6990**
0.750	1.124	0.188	**CRW1 R**	**7414**
	1.124	0.188	**CRW1 V**	**7417**
	1.249	0.188	**CRW1 V**	**7467**[1)]
	1.250	0.188	**CRW1 R**	**7439**
	1.250	0.188	**CRW1 R**	**7478**[1)]
	1.250	0.250	**CRW1 R**	**7438**
	1.250	0.250	**CRW1 R**	**7440**
	1.250	0.250	**CRWA1 R**	**7443**
	1.250	0.250	**CRW1 V**	**7450**
	1.250	0.250	**CRWA1 V**	**7453**
	1.250	0.250	**CRWA1 V**	**7455**
	1.252	0.188	**CRW1 R**	**7469**
	1.260	0.250	**CRW1 R**	**7473**
	1.312	0.250	**CRW1 R**	**7474**
	1.312	0.250	**CRWA1 R**	**7475**
	1.375	0.250	**CRW1 R**	**7512**
0.750	1.375	0.250	**CRWA1 R**	**7513**
	1.375	0.250	**CRW1 V**	**7515**
	1.375	0.250	**CRWA1 V**	**7517**
	1.375	0.250	**CRWA1 P**	**7533**
	1.499	0.250	**CRW1 V**	**7567**
	1.499	0.250	**CRW1 R**	**7572**[1)]
	1.499	0.250	**CRWA1 R**	**7573**
	1.575	0.250	**CRW1 R**	**7591**

Dimensions Shaft d_1	Bore D	Nominal seal width b	Design and lip material	Designation
in			–	–
0.750 cont.	1.624	0.250	**CRW1 V**	**7623**
	1.624	0.250	**CRWA1 V**	**7624**
	1.624	0.250	**CRW1 R**	**7627**
	1.624	0.250	**CRWA1 R**	**7628**
	1.752	0.250	**CRW1 R**	**7636**
	1.752	0.250	**CRWA1 V**	**7638**
	1.828	0.250	**CRW1 R**	**7661**
	1.874	0.250	**CRW1 R**	**7690**
	2.047	0.313	**CRW1 R**	**7693**
0.781	1.375	0.313	**CRW1 V**	**7824**
	1.375	0.313	**CRW1 R**	**7829**[1)]
	1.499	0.313	**CRW1 R**	**7849**
	1.624	0.313	**CRW1 R**	**7872**
	1.828	0.250	**CRW1 P**	**7889**
0.787	1.124	0.188	**CRW1 R**	**7740**
0.813	1.187	0.313	**CRWA1 V**	**8013**
	1.250	0.188	**CRW1 R**	**8017**[1)]
	1.250	0.188	**CRW1 P**	**8018**
	1.375	0.375	**CRW1 V**	**8053**
	1.375	0.375	**CRW1 R**	**8060**
	1.499	0.250	**CRW1 R**	**8088**[1)]
	1.624	0.250	**CRW1 V**	**8178**
	1.752	0.375	**CRW1 R**	**8215**
0.875	1.250	0.188	**CRW1 R**	**8624**
	1.250	0.250	**CRW1 V**	**8621**
	1.308	0.250	**CRW1 V**	**8649**
	1.375	0.250	**CRW1 V**	**8646**
	1.375	0.250	**CRW1 R**	**8648**
	1.437	0.250	**CRW1 R**	**8691**
	1.499	0.250	**CRW1 R**	**8700**
	1.499	0.250	**CRWA1 R**	**8702**
	1.499	0.250	**CRW1 V**	**8704**
	1.499	0.250	**CRWA1 V**	**8707**
	1.499	0.313	**CRW1 R**	**8703**[1)]
	1.502	0.313	**CRWA1 R**	**8748**
	1.575	0.250	**CRW1 R**	**8763**
	1.624	0.250	**CRWA1 R**	**8782**
	1.624	0.250	**CRW1 V**	**8795**
	1.624	0.250	**CRW1 R**	**8796**
	1.752	0.250	**CRW1 R**	**8821**
	1.828	0.250	**CRW1 R**	**8842**
	1.874	0.250	**CRW1 R**	**8860**
0.875	2.000	0.250	**CRW1 R**	**8870**
	2.050	0.375	**CRWH1 V**	**8871**
0.882	2.088	0.313	**CRWHA1 R**	**9000**
0.938	1.375	0.250	**CRWA1 R**	**9244**
	1.500	0.250	**CRW1 R**	**9303**
	1.500	0.250	**CRW1 V**	**9304**
	1.624	0.250	**CRW1 R**	**9307**
	1.624	0.250	**CRW1 V**	**9308**
	1.752	0.250	**CRW1 R**	**9347**
	1.828	0.250	**CRW1 R**	**9409**

d_1 **0.950–1.250** in

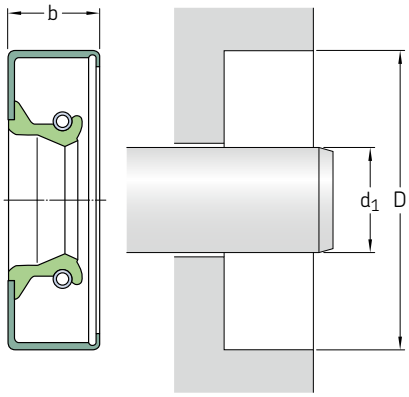

Please see **pages 83** to **86** for housing bore requirements.

Dimensions Shaft d_1	Bore D	Nominal seal width b	Design and lip material	Designation
in			–	–
0.950	1.358	0.275	**CRW1 P**	**9520**
0.969	1.406	0.250	**CRWA1 P**	**9604**
	1.499	0.313	**CRW1 V**	**9611**
	1.499	0.313	**CRW1 R**	**9613**[1]
	1.624	0.250	**CRW1 R**	**9646**
	1.624	0.250	**CRW1 V**	**9647**
	1.686	0.313	**CRWA1 R**	**9663**
	1.686	0.313	**CRW1 R**	**9664**
	1.752	0.250	**CRW1 R**	**9667**
	1.828	0.313	**CRW1 R**	**9681**
0.981	1.376	0.313	**CRW1 V**	**9888**[1]
0.984	1.499	0.250	**CRW1 V**	**9686**
	1.749	0.375	**CRWA1 V**	**9803**[1]
1.000	1.367	0.313	**CRW1 R**	**9822**
	1.375	0.250	**CRW1 P**	**9826**[1]
	1.375	0.250	**CRW1 V**	**9831**
	1.437	0.250	**CRW1 V**	**9833**
	1.437	0.250	**CRW1 R**	**9837**
	1.437	0.250	**CRWA1 R**	**9838**
	1.437	0.250	**CRWA1 V**	**9847**
	1.496	0.390	**CRW1 R**	**9850**
	1.499	0.250	**CRW1 R**	**9852**
	1.499	0.250	**CRW1 V**	**9854**
	1.499	0.250	**CRW1 R**	**9876**
	1.499	0.250	**CRWA1 R**	**9878**
	1.499	0.250	**CRWA1 V**	**9879**
	1.499	0.315	**CRWA1 V**	**9862**
	1.499	0.315	**CRW1 V**	**9892**
	1.561	0.250	**CRW1 R**	**9894**
	1.575	0.313	**CRWA1 R**	**9907**

Dimensions Shaft d_1	Bore D	Nominal seal width b	Design and lip material	Designation
in			–	–
1.000 cont.	1.624	0.250	**CRW1 R**	**9934**
	1.624	0.250	**CRWA1 R**	**9935**
	1.624	0.250	**CRW1 V**	**9937**
	1.624	0.250	**CRWA1 V**	**9939**
	1.686	0.250	**CRW1 R**	**9960**
	1.752	0.250	**CRW1 V**	**9982**
	1.752	0.250	**CRWA1 V**	**9983**
	1.752	0.250	**CRW1 R**	**9997**
	1.752	0.250	**CRWA1 R**	**9998**
	1.828	0.250	**CRW1 V**	**10058**
	1.828	0.250	**CRW1 P**	**10047**
	1.828	0.250	**CRW1 R**	**10049**
	1.828	0.250	**CRWA1 R**	**10050**
	1.851	0.250	**CRW1 R**	**10071**
	1.874	0.250	**CRW1 R**	**10075**
	1.938	0.250	**CRW1 R**	**10104**
	1.983	0.250	**CRWA1 V**	**10111**
	1.983	0.313	**CRWA1 R**	**10114**
	2.000	0.250	**CRW1 R**	**10123**
	2.000	0.250	**CRWA1 R**	**10124**
	2.000	0.250	**CRWA1 R**	**10127**
	2.000	0.250	**CRW1 V**	**10128**
	2.000	0.250	**CRWA1 V**	**10129**
	2.047	0.250	**CRWA1 R**	**10157**
	2.062	0.250	**CRW1 R**	**10158**
	2.250	0.250	**CRW1 R**	**10169**
1.063	1.499	0.250	**CRW1 R**	**10515**
	1.499	0.250	**CRW1 V**	**10518**
	1.512	0.256	**CRW1 P**	**532866**
	1.561	0.250	**CRW1 R**	**10581**
	1.577	0.250	**CRW1 R**	**10583**
	1.624	0.250	**CRW1 R**	**10598**
	1.686	0.250	**CRW1 R**	**10632**
	1.752	0.250	**CRW1 R**	**10653**

[1] Without SKF Bore Tite Coating

Dimensions Shaft d_1	Bore D	Nominal seal width b	Design and lip material	Designation
in			–	–
1.063 cont.	1.828	0.250	**CRW1 R**	**10681**
	1.828	0.250	**CRW1 V**	**10682**
	1.874	0.250	**CRW1 R**	**10700**
	1.979	0.250	**CRW1 R**	**10728**
	1.983	0.250	**CRW1 R**	**10733**
1.063	2.000	0.250	**CRW1 R**	**10740**
	2.062	0.250	**CRW1 R**	**10766**
1.125	1.499	0.188	**CRW1 V**	**11059**[1)]
	1.499	0.188	**CRW1 R**	**11061**[1)]
	1.561	0.250	**CRW1 P**	11066
	1.561	0.250	**CRW1 R**	**11067**
	1.561	0.250	**CRW1 V**	**11071**
	1.565	0.250	**CRW1 R**	**11082**
	1.624	0.250	**CRW1 P**	**11111**
	1.624	0.250	**CRW1 R**	**11123**
	1.624	0.250	**CRWA1 R**	**11124**
	1.624	0.250	**CRW1 V**	**11133**
	1.624	0.250	**CRWA1 V**	**11134**
	1.733	0.375	**CRW1 R**	**11137**
	1.752	0.250	**CRW1 R**	**11138**
	1.752	0.250	**CRW1 V**	**11144**
	1.828	0.250	**CRW1 R**	**11170**
	1.828	0.250	**CRWA1 R**	**11171**
	1.828	0.250	**CRW1 V**	**11172**
	1.828	0.250	**CRWA1 V**	**11175**
	1.852	0.313	**CRWH1 R**	**11197**
	1.852	0.313	**CRWHA1 R**	**11200**
	1.874	0.250	**CRW1 V**	**11225**
	1.874	0.250	**CRWA1 V**	**11218**
	1.874	0.250	**CRW1 R**	**11224**
	1.874	0.250	**CRWA1 R**	**11223**
	1.983	0.250	**CRW1 R**	**11299**
	2.000	0.250	**CRW1 R**	**11340**
	2.000	0.250	**CRW1 V**	**11344**
	2.000	0.374	**CRWA1 V**	**12138**
	2.000	0.375	**CRWA1 R**	**11343**
1.125	2.047	0.313	**CRWA1 R**	**11353**
	2.062	0.250	**CRWA1 V**	**11368**
	2.062	0.313	**CRW1 R**	**11366**
	2.125	0.313	**CRW1 R**	**11372**
	2.125	0.313	**CRW1 V**	**11373**
	2.250	0.250	**CRW1 R**	**11378**
	2.441	0.250	**CRW1 R**	**11392**
1.126	1.575	0.236	**CRWA1 R**	**11086**
1.156	1.686	0.250	**CRWA1 R**	**11518**
	1.752	0.250	**CRWA1 R**	**11514**
	1.874	0.250	**CRW1 R**	**11524**
	1.875	0.375	**CRWA1 R**	**11536**[1)]
	2.000	0.250	**CRW1 R**	**11544**
	2.000	0.250	**CRWA1 R**	**11545**
	2.000	0.250	**CRW1 V**	**11550**
	2.062	0.313	**CRW1 R**	**11558**

Dimensions Shaft d_1	Bore D	Nominal seal width b	Design and lip material	Designation
in			–	–
1.175	2.031	0.500	**CRW1 R**	**11553**
1.178	2.073	0.335	**CRW1 S**	**11650**
1.188	1.561	0.313	**CRW1 V**	**11710**[1)]
	1.686	0.250	**CRW1 P**	**11728**
	1.687	0.250	**CRW1 R**	**11730**
	1.752	0.250	**CRW1 R**	**11734**
	1.752	0.250	**CRW1 V**	**11736**
	1.828	0.375	**CRW1 R**	**11740**
	1.875	0.250	**CRW1 P**	**11763**
	1.875	0.375	**CRW1 R**	**11585**
	1.983	0.250	**CRW1 R**	**11776**
	1.983	0.250	**CRWA1 R**	**11777**
	2.000	0.250	**CRW1 R**	**11800**
	2.000	0.250	**CRWA1 R**	**11801**
	2.000	0.250	**CRW1 V**	**11806**
	2.062	0.250	**CRW1 R**	**11878**
	2.062	0.250	**CRW1 P**	**11879**
	2.125	0.313	**CRW1 R**	**11907**
	2.165	0.250	**CRW1 R**	**11911**
	2.250	0.250	**CRW1 R**	**11914**
	2.437	0.250	**CRW1 R**	**11923**
	2.441	0.250	**CRW1 R**	**11930**
1.190	2.125	0.313	**CRWHA1 R**	**11908**
1.234	2.250	0.250	**CRW1 R**	**12590**
1.250	1.625	0.188	**CRW1 R**	**12329**
	1.687	0.250	**CRW1 V**	**12335**
	1.687	0.250	**CRW1 R**	**12336**
	1.687	0.250	**CRWA1 V**	**12337**
	1.687	0.313	**CRWA1 R**	**12350**
1.250	1.752	0.250	**CRW1 V**	**12340**
	1.752	0.250	**CRWA1 V**	**12343**
	1.752	0.250	**CRW1 R**	**12363**
	1.752	0.250	**CRWA1 R**	**12364**
	1.874	0.250	**CRW1 P**	**12382**
	1.874	0.250	**CRWA1 V**	**12383**
	1.874	0.250	**CRW1 R**	**12384**
	1.874	0.250	**CRWA1 R**	**12386**
	1.938	0.250	**CRW1 R**	**12391**
	1.955	0.250	**CRWA1 R**	**12396**
	1.983	0.250	**CRW1 R**	**12427**
	1.983	0.250	**CRWA1 R**	**12428**
	1.983	0.250	**CRW1 V**	**12432**
	2.000	0.250	**CRW1 V**	**12445**
	2.000	0.250	**CRWA1 V**	**12446**
	2.000	0.250	**CRW1 R**	**12456**
	2.000	0.250	**CRWA1 R**	**12458**
	2.000	0.438	**CRW1 P**	**12483**
	2.062	0.250	**CRWA1 V**	**12531**
	2.062	0.433	**CRWHA1 V**	**12533**
	2.062	0.438	**CRWH1 R**	**12530**
	2.125	0.250	**CRW1 V**	**12544**
	2.125	0.250	**CRW1 R**	**12545**
	2.125	0.250	**CRWA1 R**	12551

d_1 **1.250–1.563** in

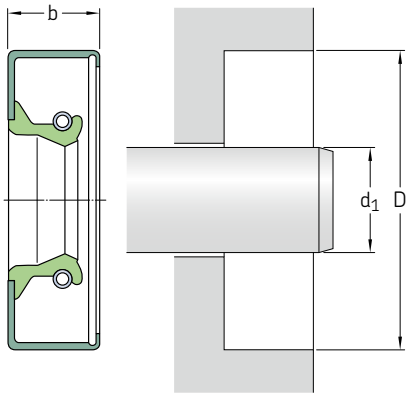

Please see **pages 83** to **86** for housing bore requirements.

Dimensions Shaft d_1	Bore D	Nominal seal width b	Design and lip material	Designation
in			–	–
1.250 cont.	2.250	0.250	**CRW1 R**	**12577**
	2.327	0.500	**CRW1 R**	**12610**
	2.374	0.313	**CRW1 R**	**12613**
	2.374	0.313	**CRWA1 R**	**12614**
	2.374	0.315	**CRW1 V**	**12612**
	2.437	0.250	**CRW1 R**	**12621**
	2.441	0.250	**CRW1 R**	**12631**
	2.500	0.310	**CRW1 V**	**12638**
	2.502	0.313	**CRW1 R**	**12637**
1.301	2.046	0.492	**CRWA1 R**	**12907**
1.313	1.828	0.375	**CRW1 P**	**13021**
	2.062	0.313	**CRW1 R**	**13050**
	2.062	0.313	**CRWA1 R**	**13052**
	2.062	0.313	**CRW1 V**	**13054**
	2.125	0.313	**CRW1 R**	**13092**
	2.250	0.313	**CRW1 R**	**13112**
	2.282	0.250	**CRWA1 R**	**13157**
1.328	2.031	0.313	**CRW1 R**	**13415**[1]
	2.061	0.313	**CRW1 R**	**13350**
	2.227	0.313	**CRW1 R**	**13418**
1.344	2.106	0.313	**CRW1 R**	**13421**
	2.125	0.313	**CRW1 R**	**13437**
1.365	1.956	0.438	**CRW1 R**	**13985**
	2.081	0.313	**CRW1 R**	**13598**
	2.261	0.313	**CRW1 R**	**13700**
1.375	1.750	0.250	**CRW1 R**	**13514**
	1.828	0.250	**CRWA1 V**	**13510**
	1.828	0.313	**CRW1 R**	**13537**
	1.835	0.250	**CRW1 R**	**13536**
	1.873	0.313	**CRW1 V**	**13511**

Dimensions Shaft d_1	Bore D	Nominal seal width b	Design and lip material	Designation
in			–	–
1.250 cont.	1.874	0.250	**CRW1 P**	**13512**
	1.874	0.250	**CRW1 R**	**13534**
	1.874	0.250	**CRW1 V**	**13538**
	1.874	0.313	**CRWA1 R**	**13535**
	1.938	0.250	**CRWA1 R**	**13552**
	1.955	0.433	**CRWA1 P**	**13527**
	1.983	0.313	**CRW1 P**	**13557**
	2.000	0.313	**CRWA1 P**	**13562**
	2.000	0.313	**CRW1 R**	**13568**
	2.000	0.313	**CRWA1 R**	**13569**
	2.000	0.313	**CRWH1 R**	**13571**
	2.000	0.313	**CRW1 V**	**13579**
	2.000	0.313	**CRWA1 V**	**13581**
	2.062	0.313	**CRW1 V**	**13582**
	2.062	0.313	**CRW1 R**	**13585**[1]
	2.062	0.313	**CRWA1 P**	**13588**
	2.062	0.315	**CRWA1 V**	**13607**
	2.106	0.313	**CRWA1 R**	**13602**[1]
	2.106	0.313	**CRW1 P**	**13614**
	2.125	0.313	**CRW1 R**	**13649**
	2.125	0.313	**CRWA1 R**	**13651**
	2.125	0.313	**CRWA1 V**	**13661**
	2.125	0.313	**CRW1 V**	**13663**
	2.250	0.250	**CRWA1 R**	**13698**
	2.250	0.313	**CRW1 R**	**13671**
	2.250	0.313	**CRWA1 R**	**13676**
	2.250	0.313	**CRW1 V**	**13688**
	2.250	0.313	**CRWA1 V**	**13691**
	2.250	0.313	**CRW1 P**	**13869**
1.375	2.374	0.313	**CRW1 V**	**13734**
	2.374	0.313	**CRW1 R**	**13738**
	2.374	0.313	**CRWA1 R**	**13739**
	2.437	0.250	**CRW1 R**	**13797**
	2.441	0.313	**CRW1 R**	**13810**
	2.441	0.313	**CRWA1 R**	**13812**

[1] Without SKF Bore Tite Coating

Dimensions Shaft d_1	Bore D	Nominal seal width b	Design and lip material	Designation
in			–	–
1.375 cont.	2.5021.3	0.313	**CRW1 R**	**13865**
	2.502	0.313	**CRW1 V**	**13867**
	2.502	0.374	**CRWA1 V**	**13856**
	2.562	0.375	**CRW1 R**	**13875**
	2.562	0.375	**CRWA1 R**	**13876**
	2.562	0.375	**CRWA1 V**	**13878**
	2.623	0.313	**CRWA1 V**	**13882**
	2.686	0.500	**CRW1 R**	**13892**
	2.716	0.313	**CRW1 R**	**13900**
	2.812	0.375	**CRWHA1 R**	**13912**
	2.835	0.313	**CRWA1 R**	**13918**
	2.835	0.313	**CRW1 R**	**13920**
	2.835	0.313	**CRWA1 P**	**13925**
	2.875	0.313	**CRWA1 P**	**13929**
1.378	2.835	0.313	**CRWA1 V**	**13926**
1.417	2.616	0.313	**CRW1 R**	**14092**
1.438	2.062	0.313	**CRW1 V**	**14212**[1)]
	2.062	0.313	**CRWA1 R**	**14214**
	2.125	0.313	**CRW1 R**	**14223**
	2.125	0.313	**CRWA1 V**	**14225**
	2.250	0.313	**CRWA1 R**	**14247**
	2.250	0.313	**CRWA1 V**	**14259**
	2.250	0.313	**CRW1 V**	**14260**
	2.250	0.313	**CRW1 R**	**14262**
1.438	2.374	0.313	**CRW1 R**	**14282**
	2.374	0.313	**CRWA1 R**	**14285**
	2.437	0.313	**CRW1 R**	**14363**
	2.502	0.313	**CRW1 R**	**14383**
	2.623	0.313	**CRW1 R**	**14404**
	2.686	0.313	**CRW1 R**	**14423**
	2.750	0.313	**CRW1 R**	**14458**
1.484	2.254	0.313	**CRW1 R**	**14907**
1.494	2.060	0.270	**CRW1 R**	**14789**
1.496	2.165	0.315	**CRWA1 R**	**550250**
1.500	1.874	0.250	**CRW1 R**	**14807**[1)]
	1.918	0.250	**CRW1 V**	**14809**[1)]
	1.983	0.250	**CRW1 V**	**14821**
	1.983	0.250	**CRWA1 R**	**14824**
	1.983	0.313	**CRW1 R**	**14832**
	2.000	0.313	**CRWA1 R**	**14846**
	2.000	0.313	**CRW1 R**	**14855**
	2.000	0.313	**CRW1 V**	**14861**
	2.048	0.313	**CRWA1 R**	**14858**
	2.062	0.313	**CRW1 R**	**14864**
	2.062	0.313	**CRW1 V**	**14867**
	2.125	0.313	**CRW1 R**	**14875**
	2.125	0.313	**CRWA1 R**	**14876**
	2.125	0.313	**CRW1 V**	**14886**
	2.125	0.313	**CRWA1 V**	**14887**

Dimensions Shaft d_1	Bore D	Nominal seal width b	Design and lip material	Designation
in			–	–
1.500 cont.	2.222	0.313	**CRW1 R**	**14903**
	2.250	0.313	**CRW1 S**	**14935**
	2.250	0.313	**CRW1 R**	**14938**
	2.250	0.313	**CRWA1 R**	**14939**
	2.250	0.313	**CRW1 V**	**14940**
	2.250	0.313	**CRWA1 V**	**14942**
	2.260	0.406	**CRW1 R**	**14968**
	2.374	0.313	**CRW1 V**	**14992**
	2.374	0.313	**CRWA1 V**	**14994**
	2.374	0.313	**CRW1 R**	**15004**
	2.374	0.313	**CRWA1 R**	**15005**
	2.374	0.500	**CRWH1 R**	**15039**
	2.377	0.453	**CRWA1 R**	**15041**
	2.437	0.313	**CRW1 R**	**15076**
	2.441	0.313	**CRW1 R**	**15092**[1)]
	2.441	0.313	**CRWA1 R**	**15093**
	2.441	0.313	**CRW1 V**	**15097**
	2.502	0.313	**CRW1 V**	**15138**
	2.502	0.313	**CRW1 R**	**15141**
	2.502	0.313	**CRWA1 R**	**15142**
	2.561	0.313	**CRW1 R**	**15176**
	2.623	0.313	**CRW1 R**	**15194**
	2.686	0.500	**CRW1 R**	**15207**
1.500	2.716	0.438	**CRW1 R**	**15204**
	2.750	0.313	**CRW1 R**	**15214**
	2.758	0.313	**CRW1 R**	**15230**
	2.835	0.313	**CRW1 R**	**15234**
	2.875	0.313	**CRW1 R**	**15235**
1.552	2.502	0.500	**CRWA1 R**	**15450**
	2.686	0.500	**CRW1 R**	**15460**
	2.750	0.500	**CRWHA1 P**	**15462**
1.563	2.062	0.250	**CRW1 V**	**15506**
	2.062	0.250	**CRW1 R**	**15508**
	2.125	0.313	**CRW1 R**	**15517**[1)]
	2.125	0.313	**CRWA1 P**	**15518**
	2.250	0.313	**CRW1 R**	**15522**
	2.374	0.313	**CRW1 P**	**15540**[1)]
	2.374	0.313	**CRW1 R**	**15542**
	2.374	0.313	**CRWA1 R**	**15543**
	2.374	0.313	**CRWA1 V**	**15549**
	2.437	0.313	**CRW1 R**	**15592**[1)]
	2.441	0.500	**CRWA1 R**	**15620**
	2.465	0.374	**CRWA1 P**	**15624**
	2.502	0.313	**CRWA1 R**	**15635**
	2.502	0.313	**CRW1 R**	**15655**
	2.502	0.313	**CRW1 V**	**15656**
	2.561	0.313	**CRW1 R**	**15677**
	2.623	0.313	**CRW1 R**	**15699**
	2.686	0.313	**CRW1 R**	**15707**
	2.750	0.500	**CRWH1 R**	**15761**
	2.875	0.313	**CRW1 R**	**15773**
	2.875	0.313	**CRWA1 P**	**15779**

d_1 **1.578–1.875** in

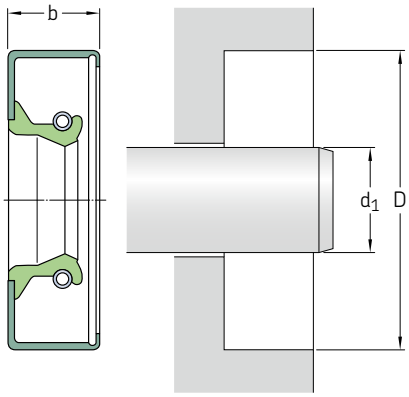

Please see **pages 83** to **86** for housing bore requirements.

Dimensions Shaft d_1	Bore D	Nominal seal width b	Design and lip material	Designation
in			–	–
1.578	2.082	0.250	**CRW1 R**	**15510**
	2.408	0.313	**CRWHA1 R**	**15557**
1.594	2.125	0.313	**CRW1 P**	**15915**
	2.437	0.313	**CRW1 P**	**15940**
	2.437	0.313	**CRW1 R**	**15955**
	2.502	0.313	**CRW1 R**	**15960**
	2.623	0.313	**CRW1 R**	**15968**
	2.758	0.313	**CRW1 R**	**15975**
1.618	2.531	0.438	**CRWA1 R**	**16449**
1.625	2.000	0.250	**CRW1 V**	**16039**
	2.000	0.250	**CRW1 R**	**16046**[1]
	2.116	0.313	**CRWA1 R**	**16047**
	2.125	0.250	**CRW1 V**	**16048**
	2.125	0.250	**CRW1 R**	**16054**
	2.248	0.313	**CRWA1 R**	**16062**
	2.250	0.313	**CRW1 R**	**16061**
	2.250	0.313	**CRW1 V**	**16078**[1]
	2.250	0.375	**CRW1 P**	**16049**
	2.282	0.313	**CRW1 R**	**16083**
	2.374	0.250	**CRW1 R**	**16094**[1]
	2.374	0.313	**CRWH1 R**	**16072**
	2.374	0.313	**CRW1 V**	**16077**
	2.374	0.313	**CRW1 R**	**16084**
	2.374	0.313	**CRWA1 R**	**16085**
	2.374	0.313	**CRWA1 P**	**16091**[1]
	2.374	0.500	**CRWH1 R**	**16079**
	2.437	0.313	**CRW1 R**	**16113**
	2.437	0.313	**CRWA1 R**	**16128**
	2.437	0.313	**CRW1 V**	**16119**
	2.437	0.313	**CRWA1 V**	**16120**
	2.441	0.313	**CRW1 R**	**16180**
	2.441	0.313	**CRWA1 R**	**16201**

Dimensions Shaft d_1	Bore D	Nominal seal width b	Design and lip material	Designation
in			–	–
1.625 cont.	2.502	0.313	**CRWA1 V**	**16243**
	2.502	0.313	**CRW1 R**	**16245**
	2.502	0.313	**CRWA1 R**	**16246**
	2.502	0.313	**CRWA1 P**	**16247**[1]
	2.502	0.374	**CRWHA1 V**	**16257**
	2.502	0.375	**CRWHA1 R**	**16254**
	2.562	0.313	**CRWA1 V**	**16290**
	2.623	0.313	**CRW1 R**	**16314**
	2.623	0.313	**CRWA1 R**	**16315**
	2.623	0.313	**CRW1 V**	**16316**
	2.686	0.313	**CRW1 R**	**16337**
	2.686	0.313	**CRW1 V**	**16338**
	2.750	0.250	**CRW1 R**	**16364**
	2.750	0.313	**CRWH1 R**	**16368**
	2.758	0.313	**CRW1 R**	**16374**
	2.875	0.313	**CRW1 R**	**16406**
	3.000	0.313	**CRWH1 R**	**16422**
1.645	2.656	0.313	**CRWA1 P**	**16500**
1.656	2.623	0.375	**CRWA1 P**	**16545**
	2.686	0.313	**CRW1 R**	**16556**
1.688	2.279	0.500	**CRWH1 R**	**16650**
	2.328	0.313	**CRWA1 R**	**16657**
	2.437	0.250	**CRW1 S**	**16692**
	2.437	0.313	**CRW1 R**	**16679**
	2.437	0.313	**CRWA1 R**	**16680**
	2.437	0.469	**CRW1 S**	**16696**
	2.502	0.313	**CRW1 R**	**16719**
	2.623	0.313	**CRWA1 R**	**16814**
	2.623	0.500	**CRW1 R**	**16816**
	2.623	0.500	**CRWA1 V**	**16817**
	2.686	0.313	**CRW1 R**	**16842**
	2.716	0.313	**CRW1 R**	**16854**
	2.750	0.313	**CRW1 R**	**16900**[1]
	2.750	0.375	**CRWA1 R**	**16903**
	2.875	0.313	**CRW1 R**	**16999**

[1] Without SKF Bore Tite Coating

Dimensions Shaft d_1	Bore D	Nominal seal width b	Design and lip material	Designation
in			–	–
1.688 cont.	3.061	0.375	**CRW1 R**	**17035**
	3.125	0.375	**CRWA1 R**	**17038**
1.704	3.034	0.500	**CRWA1 R**	**17100**
1.719	2.561	0.315	**CRWA1 R**	**17144**
1.750	2.250	0.313	**CRW1 R**	**17231**
	2.250	0.313	**CRW1 V**	**17234**
	2.374	0.313	**CRWA1 V**	**17261**
	2.374	0.313	**CRW1 R**	**17270**
	2.374	0.313	**CRWA1 R**	**17271**
	2.411	0.375	**CRW1 P**	**17280**
	2.437	0.313	**CRW1 R**	**17283**
	2.437	0.313	**CRW1 R**	**17284**
1.750	2.437	0.313	**CRWA1 R**	**17285**
	2.437	0.313	**CRW1 V**	**17292**
	2.437	0.313	**CRWA1 V**	**17293**
	2.441	0.313	**CRW1 R**	**17315**
	2.441	0.313	**CRWA1 R**	**550154**
	2.441	0.375	**CRWA1 V**	**17320**
	2.502	0.313	**CRW1 V**	**17379**
	2.502	0.313	**CRWA1 V**	**17381**
	2.502	0.313	**CRW1 R**	**17386**
	2.502	0.313	**CRWA1 R**	**17387**
	2.502	0.375	**CRWHA1 V**	**17395**
	2.502	0.375	**CRW1 S**	**17399**
	2.561	0.313	**CRW1 R**	**17404**
	2.565	0.313	**CRWA1 R**	**17413**
	2.623	0.313	**CRW1 R**	**17442**
	2.623	0.313	**CRWA1 R**	**17443**
	2.623	0.313	**CRW1 S**	**17444**
	2.623	0.313	**CRWA1 V**	**17448**
	2.623	0.375	**CRWH1 R**	**17456**
	2.686	0.313	**CRW1 R**	**17484**[1)]
	2.717	0.438	**CRWA1 R**	**17607**
	2.750	0.313	**CRWA1 R**	**17523**
	2.750	0.313	**CRW1 R**	**17557**
	2.750	0.313	**CRW1 V**	**17558**
	2.758	0.313	**CRW1 R**	**17605**
	2.810	0.313	**CRWA1 R**	**17624**[1)]
	2.810	0.313	**CRWA1 V**	**17627**
	2.875	0.313	**CRW1 R**	**17653**
	2.875	0.313	**CRW1 V**	**17657**
	2.875	0.375	**CRWHA1 R**	**17645**
	2.981	0.438	**CRWHA1 R**	**17675**[1)]
	2.997	0.313	**CRWHA1 R**	**17678**
	2.997	0.313	**CRW1 R**	**17695**
	3.000	0.313	**CRWA1 R**	**17699**
	3.000	0.313	**CRW1 R**	**17707**
	3.000	0.313	**CRW1 V**	**17709**
	3.061	0.313	**CRW1 R**	**17716**
	3.061	0.375	**CRWA1 R**	**17718**
	3.189	0.313	**CRW1 R**	**17746**
	3.543	0.438	**CRW1 R**	**17756**
	3.625	0.438	**CRW1 R**	**17761**

Dimensions Shaft d_1	Bore D	Nominal seal width b	Design and lip material	Designation
in			–	–
1.768	2.363	0.313	**CRWHA1 V**	**17780**
1.781	2.252	0.313	**CRWA1 R**	**17806**
	2.502	0.313	**CRWH1 R**	**17810**
	2.502	0.313	**CRWH1 V**	**17811**
	2.623	0.313	**CRW1 R**	**17821**
	2.686	0.313	**CRW1 R**	**17832**[1)]
1.812	2.623	0.374	**CRWA1 V**	**17949**
1.813	2.279	0.313	**CRW1 R**	**18025**
	2.437	0.313	**CRW1 R**	**18039**
	2.562	0.313	**CRWA1 V**	**18049**
1.813	2.623	0.313	**CRW1 R**	**18104**
	2.686	0.313	**CRWA1 P**	**18114**
	2.750	0.313	**CRW1 R**	**18159**
	2.875	0.313	**CRW1 R**	**18242**
	3.000	0.375	**CRWA1 P**	**18264**
1.844	2.623	0.313	**CRW1 R**	**18425**
	2.750	0.313	**CRW1 P**	**18444**
1.868	2.518	0.315	**CRWA1 P**	**18492**
1.875	2.398	0.250	**CRW1 R**	**18549**
	2.471	0.313	**CRWA1 R**	**18545**
	2.500	0.313	**CRW1 P**	**18555**
	2.502	0.313	**CRW1 R**	**18565**
	2.562	0.313	**CRWA1 V**	**18546**
	2.562	0.313	**CRW1 P**	**18562**
	2.623	0.313	**CRW1 R**	**18580**
	2.623	0.313	**CRWA1 R**	**18581**
	2.623	0.313	**CRW1 V**	**18582**
	2.623	0.313	**CRWA1 V**	**18584**
	2.623	0.374	**CRW1 S**	**18592**
	2.686	0.313	**CRW1 R**	**18626**
	2.750	0.313	**CRW1 V**	**18652**
	2.750	0.313	**CRW1 R**	**18657**
	2.750	0.313	**CRWA1 R**	**18658**
	2.750	0.313	**CRW1 P**	**18666**
	2.758	0.313	**CRW1 P**	**18671**
	2.758	0.313	**CRW1 S**	**18679**
	2.782	0.438	**CRWH1 R**	**18693**
	2.782	0.438	**CRWHA1 R**	**18695**
	2.875	0.313	**CRW1 V**	**18732**
	2.875	0.313	**CRW1 R**	**18733**
	2.875	0.313	**CRWA1 R**	**18734**
1.875	2.875	0.313	**CRWA1 V**	**18737**
	2.997	0.313	**CRW1 R**	**18785**
	3.000	0.313	**CRW1 R**	**18817**
	3.000	0.313	**CRW1 V**	**18818**
	3.061	0.313	**CRWA1 R**	**18872**
	3.105	0.500	**CRWA1 R**	**18880**
	3.189	0.469	**CRWH1 R**	**18899**

d_1 **1.875–2.250** in

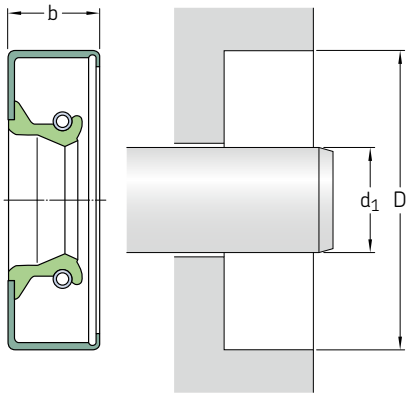

Please see **pages 83** to **86** for housing bore requirements.

Dimensions Shaft d_1	Bore D	Nominal seal width b	Design and lip material	Designation
in			–	–
1.875 cont.	3.249	0.484	**CRWA1 R**	**18922**
	3.371	0.438	**CRWH1 R**	**18916**
	3.496	0.438	**CRWA1 R**	**18924**
	3.500	0.438	**CRW1 R**	**18926**
1.893	2.434	0.250	**CRW1 R**	**19000**[1]
1.906	2.752	0.375	**CRWA1 P**	**19017**
1.915	2.533	0.250	**CRW1 R**	**19010**
1.938	2.412	0.313	**CRW1 R**	**19215**
	2.437	0.250	**CRW1 R**	**19210**
	2.437	0.250	**CRW1 R**	**19212**
	2.502	0.375	**CRWA1 R**	**19220**
	2.563	0.313	**CRW1 R**	**19211**
	2.623	0.313	**CRW1 R**	**19226**
	2.623	0.313	**CRWA1 V**	**19227**
	2.623	0.313	**CRWA1 R**	**19229**
	2.686	0.300	**CRW1 P**	**19244**
	2.686	0.313	**CRWA1 P**	**19234**
	2.686	0.313	**CRW1 R**	**19236**
	2.686	0.313	**CRWA1 R**	**19237**
	2.686	0.313	**CRWA1 V**	**19243**
	2.686	0.375	**CRW1 S**	**19240**
	2.750	0.313	**CRW1 R**	**19264**
	2.750	0.313	**CRW1 V**	**19267**
	2.875	0.313	**CRW1 R**	**19300**
	2.875	0.313	**CRWA1 R**	**19301**
	2.875	0.313	**CRWH1 V**	**19304**
	2.884	0.313	**CRWA1 P**	**19310**
	2.997	0.313	**CRW1 R**	**19350**
	3.000	0.313	**CRW1 R**	**19359**
	3.000	0.313	**CRWA1 R**	**19360**[1]
	3.000	0.313	**CRWA1 V**	**19368**

Dimensions Shaft d_1	Bore D	Nominal seal width b	Design and lip material	Designation
in			–	–
1.938 cont.	3.061	0.313	**CRW1 R**	**19380**
	3.062	0.500	**CRW1 S**	**19438**
	3.125	0.500	**CRW1 R**	**19400**
	3.189	0.313	**CRW1 R**	**19407**
	3.251	0.313	**CRWA1 V**	**19433**
	3.251	0.313	**CRW1 R**	**19434**
	3.350	0.469	**CRWHA1 R**	**19445**
	3.543	0.313	**CRW1 R**	**19449**
1.969	2.623	0.313	**CRWA1 R**	**19607**
2.000	2.500	0.438	**CRW1 S**	**19739**
	2.502	0.313	**CRW1 P**	**19745**
	2.623	0.313	**CRW1 R**	**19760**
	2.623	0.313	**CRWA1 R**	**19762**
	2.623	0.313	**CRWA1 V**	**19777**
	2.623	0.313	**CRWA1 V**	**19782**
	2.686	0.375	**CRW1 R**	**19778**
	2.716	0.375	**CRW1 R**	**19785**
	2.716	0.375	**CRWA1 R**	**19786**
	2.746	0.375	**CRW1 S**	**19807**
	2.750	0.313	**CRW1 V**	**19823**
	2.750	0.313	**CRW1 R**	**19831**
	2.750	0.313	**CRWA1 R**	**19832**
	2.750	0.313	**CRWA1 V**	**19839**
	2.750	0.313	**CRW1 V**	**19840**
	2.835	0.469	**CRWH1 R**	**19848**
	2.875	0.313	**CRW1 V**	**19884**
	2.875	0.313	**CRW1 R**	**19886**
	2.875	0.313	**CRWA1 R**	**19887**
	2.875	0.375	**CRWHA1 R**	**19896**
	2.875	0.500	**CRWH1 R**	**19900**
	2.880	0.375	**CRWA1 R**	**19922**
	2.880	0.375	**CRWA1 P**	**19923**

[1] Without SKF Bore Tite Coating

Dimensions Shaft d_1	Bore D	Nominal seal width b	Design and lip material	Designation
in			–	–
2.000 cont.	2.997	0.375	**CRWH1 R**	**19969**
	2.997	0.375	**CRWHA1 R**	**19970**
	2.997	0.375	**CRWH1 V**	**19979**
	3.000	0.313	**CRW1 R**	**19992**
	3.000	0.313	**CRWA1 R**	**19993**
	3.000	0.313	**CRWA1 V**	**19995**
2.000	3.000	0.375	**CRWH1 V**	**20002**
	3.000	0.375	**CRWH1 R**	**20004**
	3.000	0.375	**CRWHA1 R**	**20005**
	3.061	0.375	**CRW1 R**	**20045**
	3.061	0.500	**CRWH1 R**	**20055**
	3.061	0.500	**CRWHA1 R**	**20059**
	3.125	0.375	**CRW1 R**	**20070**
	3.150	0.375	**CRW1 R**	**20079**
	3.189	0.469	**CRWH1 R**	**20098**
	3.189	0.469	**CRWHA1 R**	**20100**
	3.251	0.438	**CRWH1 R**	**20109**
	3.371	0.438	**CRW1 V**	**20122**
	3.371	0.438	**CRWH1 R**	**20124**
	3.371	0.438	**CRWHA1 R**	**20125**
	3.371	0.438	**CRWH1 V**	**20127**[1)]
	3.543	0.438	**CRWH1 R**	**20140**
	3.623	0.438	**CRWH1 R**	**20144**
	4.003	0.438	**CRWH1 R**	**20158**
2.047	2.561	0.315	**CRW1 R**	**20420**
2.063	2.561	0.313	**CRW1 V**	**20520**
	2.750	0.313	**CRWH1 R**	**20530**[1)]
	2.842	0.438	**CRWH1 R**	**20538**
	2.875	0.438	**CRWH1 R**	**20554**
	2.997	0.438	**CRWH1 R**	**20586**
	3.000	0.375	**CRW1 R**	**20594**
	3.000	0.375	**CRWA1 V**	**20596**
	3.061	0.313	**CRWH1 R**	**20643**
	3.125	0.375	**CRW1 R**	**20659**
	3.189	0.375	**CRW1 R**	**20702**
	3.251	0.438	**CRWHA1 R**	**20747**
	3.251	0.438	**CRWH1 R**	**20749**
2.125	2.750	0.375	**CRW1 V**	**21063**[1)]
	2.750	0.500	**CRWA1 R**	**21061**
	2.763	0.250	**CRW1 R**	**21069**
	2.875	0.375	**CRW1 S**	**21103**
	2.875	0.438	**CRW1 V**	**21091**
	2.875	0.438	**CRW1 R**	**21098**
	2.875	0.438	**CRWA1 R**	**21100**
	2.875	0.438	**CRWHA1 R**	**21108**
	2.997	0.438	**CRWH1 R**	**21134**
	2.997	0.438	**CRWHA1 R**	**21136**
	3.000	0.313	**CRWHA1 V**	**21167**
	3.000	0.375	**CRW1 R**	**21163**
	3.000	0.375	**CRWA1 R**	**21164**
	3.000	0.438	**CRWH1 V**	**21171**
	3.000	0.438	**CRWH1 R**	**21172**
	3.000	0.438	**CRWHA1 R**	**21173**

Dimensions Shaft d_1	Bore D	Nominal seal width b	Design and lip material	Designation
in			–	–
2.125 cont.	3.061	0.438	**CRWH1 V**	**21215**
	3.061	0.500	**CRW1 R**	**21210**
	3.061	0.500	**CRWA1 R**	**21211**[1)]
	3.061	0.500	**CRWHA1 R**	**21213**
	3.125	0.438	**CRWH1 R**	**21234**
	3.125	0.438	**CRWHA1 P**	**21245**
	3.189	0.375	**CRWA1 R**	**21267**
	3.189	0.375	**CRWA1 V**	**21269**
	3.189	0.469	**CRWHA1 S**	**21270**
	3.251	0.438	**CRWH1 R**	**21302**
	3.350	0.438	**CRWH1 R**	**21336**
	3.371	0.375	**CRWA1 R**	**21352**
	3.371	0.438	**CRWH1 R**	**21353**
	3.543	0.438	**CRWH1 R**	**21358**
2.188	2.875	0.438	**CRWH1 R**	**21736**
	2.997	0.438	**CRWH1 R**	**21749**
	3.000	0.375	**CRWA1 R**	**21759**
	3.000	0.375	**CRWA1 V**	**21763**
	3.000	0.500	**CRWH1 R**	**21764**
	3.061	0.500	**CRWH1 R**	**21787**
	3.251	0.438	**CRWH1 R**	**21840**
	3.350	0.438	**CRWH1 R**	**21890**
	3.371	0.438	**CRWH1 R**	**21910**
2.250	2.875	0.313	**CRWA1 R**	**22328**
	2.891	0.563	**CRWA1 R**	**22347**
	2.997	0.438	**CRWH1 R**	**22336**
	2.997	0.438	**CRWHA1 R**	**22340**
	3.000	0.375	**CRW1 R**	**22353**
	3.000	0.375	**CRWA1 R**	**22354**
	3.000	0.375	**CRWA1 V**	**22361**
	3.000	0.375	**CRW1 V**	**22363**
2.250	3.000	0.438	**CRWH1 R**	**22358**
	3.000	0.438	**CRWHA1 R**	**22359**
	3.000	0.438	**CRWH1 V**	**22367**
	3.061	0.375	**CRW1 R**	**22382**
	3.061	0.438	**CRWH1 R**	**22390**
	3.061	0.438	**CRWHA1 R**	**22391**
	3.061	0.438	**CRWHA1 S**	**22394**
	3.125	0.375	**CRWA1 R**	**22400**
	3.125	0.375	**CRWA1 V**	**22405**
	3.125	0.500	**CRWH1 R**	**22407**[1)]
	3.189	0.438	**CRW1 R**	**22424**
	3.189	0.438	**CRWA1 P**	**22425**
	3.251	0.375	**CRW1 R**	**22440**
	3.251	0.375	**CRWA1 R**	**22441**
	3.251	0.438	**CRWH1 R**	**22446**
	3.251	0.438	**CRWHA1 R**	**22448**
	3.251	0.438	**CRWH1 V**	**22449**
	3.350	0.375	**CRW1 P**	**22484**
	3.350	0.438	**CRWH1 R**	**22492**[1)]
	3.350	0.438	**CRWHA1 R**	**22493**
	3.350	0.438	**CRWH1 V**	**22495**

d_1 **2.250–2.750** in

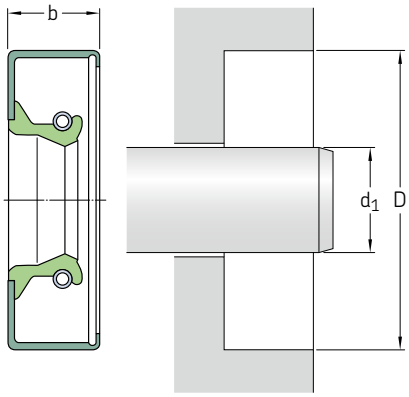

Please see **pages 83** to **86** for housing bore requirements.

Dimensions Shaft d_1	Bore D	Nominal seal width b	Design and lip material	Designation
in			–	–
2.250 cont.	3.371	0.438	**CRWHA1 R**	**22532**
	3.371	0.438	**CRWH1 R**	**22558**
	3.371	0.438	**CRWH1 V**	**22561**
	3.500	0.438	**CRWHA1 R**	**22582**
	3.500	0.438	**CRWH1 R**	**22583**
	3.500	0.438	**CRWHA1 V**	**22590**
	3.565	0.438	**CRWA1 R**	**22610**
	3.623	0.438	**CRWH1 R**	**22618**
	3.623	0.438	**CRWHA1 R**	**22619**
	3.751	0.438	**CRWH1 R**	**22626**
	3.876	0.438	**CRWH1 R**	**22644**
	4.003	0.438	**CRWH1 R**	**22647**
2.313	2.997	0.375	**CRW1 R**	**23030**
	3.000	0.438	**CRWH1 V**	**23040**
	3.061	0.313	**CRW1 R**	**23046**
	3.125	0.375	**CRW1 R**	**23061**
	3.125	0.375	**CRWA1 V**	**23063**
	3.251	0.438	**CRWH1 R**	**23093**
	3.251	0.438	**CRWHA1 V**	**23099**[1]
	3.350	0.438	**CRWH1 R**	**23152**
	3.371	0.438	**CRW1 R**	**23167**
	3.374	0.438	**CRWHA1 R**	**23169**
	3.500	0.313	**CRW1 R**	**23184**[1]
	3.751	0.500	**CRW1 R**	**23277**
2.328	3.000	0.395	**CRW1 P**	**23300**
2.375	2.997	0.438	**CRWH1 R**	**23632**
	3.000	0.375	**CRW1 V**	**23641**
	3.061	0.438	**CRWH1 R**	**23644**
	3.061	0.438	**CRWH1 P**	**23645**
	3.061	0.438	**CRWH1 V**	**23655**

Dimensions Shaft d_1	Bore D	Nominal seal width b	Design and lip material	Designation
in			–	–
2.375 cont.	3.125	0.375	**CRW1 R**	**23646**
	3.125	0.438	**CRWH1 R**	**23652**
	3.125	0.438	**CRWHA1 R**	**23654**
	3.125	0.438	**CRWHA1 V**	**23656**
	3.189	0.438	**CRWH1 R**	**23666**
	3.251	0.438	**CRWHA1 V**	**23678**
	3.251	0.453	**CRW1 P**	**23685**
	3.350	0.375	**CRW1 R**	**23701**
	3.350	0.375	**CRWA1 R**	**23702**
	3.350	0.375	**CRW1 P**	**23703**
	3.350	0.375	**CRW1 S**	**23706**
	3.350	0.438	**CRWH1 R**	**23708**
	3.350	0.438	**CRWHA1 R**	**23710**
	3.371	0.438	**CRWH1 R**	**23742**
	3.371	0.438	**CRWH1 V**	**23746**
	3.481	0.438	**CRWH1 R**	**23755**
	3.481	0.438	**CRWHA1 R**	**23756**[1]
	3.500	0.375	**CRWA1 P**	**23770**
	3.500	0.375	**CRWH1 V**	**23771**
	3.500	0.375	**CRWH1 R**	**23779**
	3.500	0.438	**CRWHA1 R**	**23782**
	3.543	0.438	**CRWH1 R**	**23808**
	3.543	0.438	**CRWHA1 V**	**23809**
	3.601	0.438	**CRW1 R**	**23820**
	3.623	0.438	**CRWH1 R**	**23839**
2.375	3.623	0.438	**CRWHA1 P**	**23841**
	3.623	0.438	**CRWHA1 V**	**23843**
	3.876	0.438	**CRWH1 R**	**23844**
2.438	3.125	0.500	**CRWH1 R**	**24255**
	3.251	0.438	**CRWH1 R**	**24263**
	3.350	0.375	**CRW1 R**	**24286**
	3.350	0.375	**CRWA1 R**	**24287**
	3.371	0.438	**CRWH1 R**	**24320**
	3.481	0.438	**CRWH1 R**	**24340**

[1] Without SKF Bore Tite Coating

Dimensions Shaft d_1	Bore D	Nominal seal width b	Design and lip material	Designation
in			–	–
2.438 cont.	3.500	0.438	**CRWH1 R**	**24370**
	3.500	0.438	**CRWH1 V**	**24372**
	3.543	0.438	**CRWH1 R**	**24445**
2.500	3.189	0.438	**CRWH1 R**	**24881**
	3.189	0.438	**CRWH1 V**	**24883**
	3.245	0.438	**CRWH1 R**	**24889**
	3.251	0.375	**CRW1 R**	**24897**
	3.251	0.375	**CRWA1 R**	**24898**
	3.251	0.375	**CRWA1 V**	**24899**
	3.251	0.438	**CRWH1 R**	**24910**
	3.251	0.438	**CRWHA1 R**	**24911**
	3.251	0.438	**CRWH1 V**	**24914**
	3.251	0.438	**CRWHA1 V**	**24916**
	3.251	0.500	**CRW1 V**	**24913**
	3.350	0.438	**CRWH1 R**	**24931**
	3.350	0.438	**CRWHA1 R**	**24932**
	3.371	0.375	**CRWHA1 R**	**24934**[1)]
	3.371	0.438	**CRWHA1 V**	**24936**
	3.371	0.438	**CRWH1 R**	**24954**
	3.428	0.375	**CRWA1 P**	**24949**
	3.428	0.375	**CRWA1 R**	**24951**
	3.500	0.375	**CRWA1 V**	**24971**
	3.500	0.438	**CRW1 R**	**24980**
	3.500	0.438	**CRWA1 R**	**24982**
	3.500	0.438	**CRWH1 V**	**24984**
	3.500	0.438	**CRWH1 R**	**24986**
	3.500	0.438	**CRWHA1 R**	**24988**
	3.500	0.438	**CRWH1 P**	**24989**
	3.500	0.438	**CRWHA1 V**	**24990**
	3.502	0.406	**CRW1 S**	**25082**
	3.543	0.438	**CRWH1 R**	**25043**
	3.543	0.438	**CRWHA1 P**	**25065**[1)]
	3.544	0.433	**CRWA1 V**	**25037**
	3.623	0.375	**CRW1 R**	**25074**
	3.623	0.375	**CRWA1 R**	**25075**
	3.623	0.375	**CRWA1 V**	**25076**
	3.623	0.438	**CRWH1 R**	**25071**[1)]
	3.751	0.438	**CRWH1 R**	**25091**[1)]
	3.876	0.438	**CRWH1 R**	**25100**
	3.876	0.469	**CRWHA1 P**	**25102**
	4.003	0.375	**CRWA1 R**	**25108**
	4.003	0.375	**CRWA1 V**	**25110**
2.563	3.481	0.500	**CRWHA1 R**	**25561**
	3.500	0.438	**CRWH1 R**	**25597**
	3.623	0.438	**CRWH1 R**	**25641**
	3.623	0.469	**CRWA1 P**	**25661**
	3.751	0.438	**CRWH1 R**	**25713**
	3.751	0.438	**CRWHA1 R**	**25714**
	3.751	0.438	**CRWH1 V**	**25725**
	3.873	0.438	**CRWHA1 R**	**25745**[1)]
	3.876	0.438	**CRWH1 R**	**25748**
2.598	3.481	0.438	**CRWHA1 P**	**25970**

Dimensions Shaft d_1	Bore D	Nominal seal width b	Design and lip material	Designation
in			–	–
2.607	3.350	0.375	**CRWH1 P**	**25950**
2.625	3.251	0.438	**CRWH1 R**	**26110**
	3.350	0.375	**CRW1 V**	**26122**
	3.350	0.375	**CRW1 R**	**26123**
	3.350	0.375	**CRWA1 R**	**26124**
	3.350	0.438	**CRW1 R**	**26128**[1)]
	3.371	0.438	**CRWHA1 R**	**26153**
	3.374	0.438	**CRWHA1 R**	**26141**
	3.481	0.438	**CRWH1 R**	**26163**
	3.500	0.375	**CRW1 V**	**26177**
	3.500	0.375	**CRWA1 R**	**26186**
	3.500	0.438	**CRWH1 R**	**26189**
	3.500	0.438	**CRWHA1 R**	**26190**
	3.500	0.438	**CRWA1 P**	**26191**
	3.543	0.438	**CRWH1 R**	**26194**
	3.623	0.375	**CRW1 V**	**26204**
	3.623	0.375	**CRWA1 P**	**26220**
	3.623	0.375	**CRW1 R**	**26237**
2.625	3.623	0.375	**CRWA1 R**	**26238**
	3.623	0.438	**CRWH1 V**	**26208**
	3.623	0.438	**CRWH1 R**	**26209**
	3.623	0.438	**CRWHA1 R**	**26211**
	3.751	0.375	**CRWA1 R**	**26284**
	3.751	0.438	**CRWH1 R**	**26297**
	3.751	0.438	**CRWHA1 R**	**26298**
	3.751	0.438	**CRWHA1 V**	**26299**
	3.876	0.438	**CRWH1 R**	**26328**
	3.936	0.438	**CRWH1 R**	**26346**
	4.003	0.375	**CRWA1 R**	**26354**
	4.003	0.438	**CRWH1 R**	**26356**
	4.370	0.438	**CRWHA1 R**	**26359**
	4.438	0.438	**CRWH1 R**	**26368**
2.688	3.751	0.438	**CRWH1 R**	**26761**
	3.876	0.438	**CRWH1 R**	**26921**
	4.003	0.469	**CRWH1 R**	**26975**
2.750	3.481	0.438	**CRW1 R**	**27251**[1)]
	3.500	0.375	**CRW1 R**	**27268**
	3.500	0.375	**CRWA1 R**	**27269**
	3.500	0.375	**CRWA1 V**	**27272**
	3.500	0.438	**CRWH1 R**	**27280**
	3.538	0.438	**CRWH1 R**	**27284**
	3.543	0.438	**CRWH1 P**	**27292**
	3.543	0.438	**CRWH1 V**	**27293**
	3.543	0.438	**CRWHA1 P**	**27295**
	3.623	0.438	**CRWH1 V**	**27324**
	3.623	0.438	**CRWH1 R**	**27334**
	3.751	0.438	**CRW1 R**	**27361**
	3.751	0.438	**CRWA1 R**	**27362**
	3.751	0.438	**CRWH1 V**	**27365**
	3.751	0.438	**CRWH1 R**	**27368**
	3.751	0.438	**CRWHA1 R**	**27370**
	3.751	0.438	**CRWA1 P**	**27377**

d_1 **2.750–3.438** in

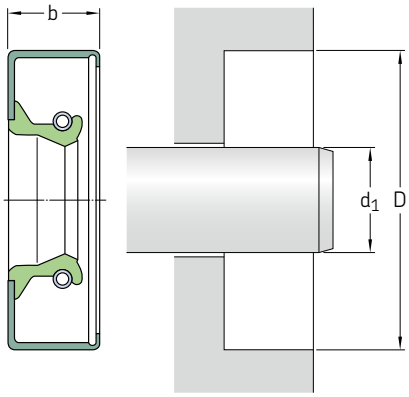

Please see **pages 83** to **86** for housing bore requirements.

Dimensions Shaft d_1	Bore D	Nominal seal width b	Design and lip material	Designation
in			–	–
2.750 cont.	3.765	0.438	**CRWH1 R**	**27426**
	3.876	0.433	**CRWHA1 P**	**27452**
	3.876	0.438	**CRWA1 R**	**27467**
	3.876	0.438	**CRWH1 R**	**27470**
	3.876	0.438	**CRWHA1 R**	**27471**
	3.936	0.438	**CRWH1 R**	**27525**
	3.937	0.438	**CRWA1 P**	**27526**
	4.003	0.375	**CRWA1 V**	**27539**
	4.003	0.438	**CRWH1 R**	**27541**
	4.003	0.438	**CRWHA1 P**	**27565**[1]
	4.249	0.438	**CRWH1 R**	**27600**
	4.249	0.438	**CRWHA1 P**	**27601**
	4.331	0.500	**CRWHA1 R**	**27625**
	4.500	0.469	**CRWH1 R**	**28848**
2.813	3.751	0.438	**CRWH1 R**	**28035**
	3.876	0.438	**CRWH1 R**	**28116**
	4.003	0.438	**CRWH1 R**	**28175**
	4.249	0.313	**CRW1 R**	**28270**
	4.249	0.438	**CRWH1 R**	**28275**
	4.250	0.438	**CRWH1 P**	**28276**
2.844	3.939	0.500	**CRWA1 R**	**28425**
	3.939	0.550	**CRWHA1 R**	**28426**
	4.003	0.438	**CRWH1 R**	**28464**
	4.003	0.500	**CRWH1 V**	**28474**
2.875	3.623	0.438	**CRWH1 R**	**28654**
	3.623	0.438	**CRWHA1 R**	**28655**
	3.751	0.375	**CRWA1 R**	**28669**
	3.751	0.375	**CRWA1 V**	**28670**
	3.751	0.438	**CRWH1 R**	**28686**

Dimensions Shaft d_1	Bore D	Nominal seal width b	Design and lip material	Designation
in			–	–
2.875 cont.	3.751	0.438	**CRWHA1 R**	**28687**
	3.751	0.438	**CRWH1 P**	**28697**
	3.751	0.438	**CRWH1 V**	**28698**
	3.751	0.438	**CRWHA1 V**	**28699**
	3.876	0.438	**CRWH1 R**	**28745**
	3.876	0.438	**CRWHA1 R**	**28746**
	3.876	0.438	**CRWHA1 V**	**28748**
	4.003	0.375	**CRWA1 R**	**28778**
	4.003	0.375	**CRWA1 V**	**28779**
	4.003	0.438	**CRWH1 R**	**28760**
	4.003	0.438	**CRWHA1 R**	**28761**
	4.125	0.375	**CRWH1 R**	**28817**
	4.331	0.438	**CRWA1 P**	**28841**
2.938	3.623	0.375	**CRW1 R**	**29218**
	3.751	0.375	**CRW1 R**	**29223**
	3.751	0.375	**CRWA1 R**	**29224**
	3.751	0.375	**CRWA1 V**	**29226**
	3.876	0.375	**CRWHA1 R**	**29263**[1]
	3.876	0.375	**CRWHA1 V**	**29262**
	3.937	0.438	**CRWA1 P**	**29273**
	4.003	0.438	**CRWH1 R**	**29316**
	4.003	0.438	**CRWHA1 R**	**29393**[1]
	4.003	0.438	**CRWA1 P**	**29350**
	4.004	0.433	**CRWHA1 V**	**29383**
	4.125	0.375	**CRWH1 R**	**29184**
	4.125	0.375	**CRWHA1 R**	**29385**
	4.501	0.438	**CRWH1 R**	**29465**
3.000	3.500	0.375	**CRW1 V**	**29841**
	3.751	0.375	**CRW1 R**	**29865**[1]
	3.751	0.375	**CRWA1 R**	**29866**
	3.751	0.375	**CRWA1 P**	**29867**
	3.751	0.375	**CRW1 V**	**29868**
	3.751	0.375	**CRWA1 V**	**29870**
	3.751	0.438	**CRWH1 R**	**29871**
	3.751	0.438	**CRWHA1 R**	**29872**

[1] Without SKF Bore Tite Coating

Dimensions Shaft d_1	Bore D	Nominal seal width b	Design and lip material	Designation
in			–	–
3.000 cont.	3.876	0.313	**CRW1 V**	**29877**
	3.876	0.438	**CRWH1 R**	**29887**
	3.876	0.469	**CRWH1 V**	**29891**
	4.003	0.375	**CRW1 R**	**29906**
	4.003	0.375	**CRWA1 R**	**29907**
	4.003	0.375	**CRWA1 V**	**29912**
	4.003	0.375	**CRWH1 P**	**29950**
	4.003	0.438	**CRWHA1 P**	**29925**[1)]
	4.003	0.438	**CRWH1 R**	**29951**[1)]
	4.003	0.438	**CRWHA1 R**	**29952**
	4.003	0.438	**CRWH1 V**	**29958**
	4.125	0.438	**CRWH1 R**	**30000**
	4.125	0.438	**CRWH1 V**	**30003**
	4.249	0.438	**CRWH1 R**	**30033**[1)]
	4.249	0.438	**CRWHA1 P**	**30056**
	4.331	0.438	**CRWH1 R**	**30060**
	4.376	0.438	**CRWH1 R**	**30070**
	4.500	0.438	**CRWH1 R**	**30087**
	4.500	0.438	**CRWHA1 R**	**30095**
	4.501	0.438	**CRWH1 V**	**30098**
	4.999	0.438	**CRWH1 R**	**30125**
3.125	3.811	0.355	**CRW1 V**	**31132**
	3.811	0.355	**CRW1 R**	**31135**
	4.003	0.375	**CRWA1 R**	**31139**
	4.003	0.375	**CRWHA1 V**	**31152**
	4.003	0.438	**CRWH1 R**	**31147**
	4.003	0.438	**CRWHA1 R**	**31148**
3.125	4.125	0.375	**CRW1 R**	**31177**
	4.125	0.375	**CRWA1 V**	**31179**
	4.125	0.438	**CRWHA1 P**	**31173**
	4.125	0.438	**CRWHA1 S**	**31185**
	4.125	0.438	**CRWH1 R**	**31189**[1)]
	4.249	0.438	**CRWH1 R**	**31227**
	4.249	0.438	**CRWHA1 R**	**31228**
	4.249	0.438	**CRWHA1 V**	**31237**
	4.376	0.438	**CRWH1 R**	**31250**
	4.376	0.438	**CRWHA1 P**	**31261**
	4.501	0.438	**CRWH1 R**	**31269**
	4.626	0.438	**CRWH1 R**	**31299**
	4.751	0.438	**CRWH1 R**	**31327**
	4.999	0.438	**CRWH1 R**	**31333**
	5.251	0.438	**CRWH1 R**	**31353**
3.150	3.946	0.394	**CRW1 V**	**31511**
3.188	4.249	0.438	**CRWH1 R**	**31758**
	4.376	0.438	**CRWH1 R**	**31825**
	4.501	0.438	**CRWH1 R**	**31855**
	4.626	0.438	**CRWH1 R**	**31870**
	4.999	0.438	**CRWH1 R**	**31955**
3.250	3.876	0.375	**CRW1 P**	**32330**
	4.003	0.375	**CRW1 R**	**32344**
	4.003	0.375	**CRWA1 P**	**32347**

Dimensions Shaft d_1	Bore D	Nominal seal width b	Design and lip material	Designation
in			–	–
3.250 cont.	4.249	0.375	**CRWA1 V**	**32392**
	4.249	0.375	**CRW1 R**	**32393**
	4.249	0.375	**CRWA1 R**	**32395**
	4.249	0.438	**CRWH1 P**	**32380**[1)]
	4.249	0.438	**CRWHA1 P**	**32385**
	4.249	0.438	**CRWH1 R**	**32396**
	4.249	0.438	**CRWHA1 R**	**32397**
	4.249	0.438	**CRWH1 V**	**32403**
3.250	4.376	0.438	**CRWH1 R**	**32424**
	4.500	0.438	**CRWA1 P**	**32448**
	4.501	0.375	**CRW1 R**	**32477**
	4.501	0.438	**CRWH1 R**	**32501**
	4.501	0.438	**CRWHA1 R**	**32502**
	4.626	0.433	**CRWHA1 R**	**32514**[1)]
	4.626	0.438	**CRWH1 R**	**32540**
	4.718	0.438	**CRWH1 R**	**32555**
	4.751	0.438	**CRWH1 R**	**32560**
	4.999	0.438	**CRWH1 R**	**32582**
	4.999	0.438	**CRWHA1 R**	**32583**
3.313	4.125	0.438	**CRWH1 R**	**33033**
	4.249	0.438	**CRWH1 R**	**33073**
	4.500	0.438	**CRWH1 R**	**33136**
	4.999	0.438	**CRWH1 R**	**33306**
3.375	4.125	0.375	**CRW1 R**	**33645**
	4.125	0.375	**CRWA1 V**	**34647**
	4.249	0.438	**CRWHA1 R**	**33665**
	4.280	0.406	**CRWA1 S**	**33654**
	4.376	0.375	**CRWA1 V**	**33699**
	4.376	0.375	**CRW1 R**	**33700**
	4.376	0.375	**CRWA1 R**	**33701**
	4.376	0.438	**CRWH1 R**	**33711**
	4.376	0.438	**CRWHA1 R**	**33712**
	4.501	0.438	**CRWA1 V**	**33733**
	4.501	0.438	**CRWH1 R**	**33735**
	4.626	0.438	**CRWH1 R**	**33772**
	4.626	0.438	**CRWHA1 R**	**33773**
	4.626	0.438	**CRWHA1 V**	**33775**
	4.686	0.438	**CRWH1 R**	**33807**[1)]
	4.999	0.438	**CRWH1 R**	**33837**[1)]
	5.251	0.438	**CRWHA1 R**	**33866**
3.438	4.249	0.375	**CRW1 R**	**34256**
	4.501	0.375	**CRWA1 R**	**34279**
	4.501	0.438	**CRWH1 R**	**34282**
	4.501	0.438	**CRWHA1 R**	**34283**
	4.626	0.438	**CRWH1 R**	**34336**
	4.626	0.438	**CRWHA1 R**	**34338**
	4.751	0.438	**CRWA1 R**	**34379**
	4.756	0.438	**CRWH1 R**	**34383**
	4.876	0.438	**CRWH1 R**	**34398**
	4.999	0.438	**CRWH1 R**	**34407**
	4.999	0.438	**CRWHA1 R**	**34408**

d_1 **3.438–4.500** in

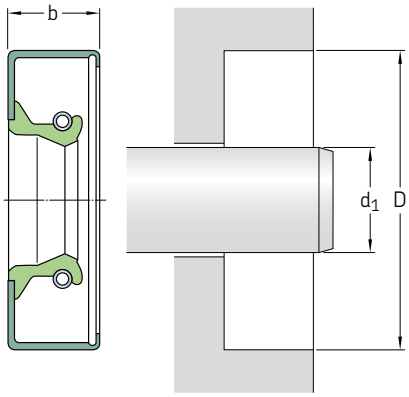

Please see **pages 83** to **86** for housing bore requirements.

Dimensions Shaft d_1	Bore D	Nominal seal width b	Design and lip material	Designation
in			–	–
3.438 cont.	4.249	0.438	**CRWHA1 V**	**34857**
	4.376	0.375	**CRW1 R**	**34860**
	4.376	0.375	**CRWA1 R**	**34861**
	4.376	0.375	**CRWA1 V**	**34866**
	4.376	0.433	**CRWHA1 V**	**34869**
	4.376	0.438	**CRWH1 R**	**34867**
	4.376	0.438	**CRWHA1 R**	**34868**
3.500	4.501	0.375	**CRWA1 V**	**34883**
	4.501	0.375	**CRW1 R**	**34886**
	4.501	0.375	**CRWA1 R**	**34887**
	4.501	0.438	**CRWH1 R**	**34888**
	4.501	0.438	**CRWHA1 R**	**34889**
	4.501	0.438	**CRWHA1 P**	**34891**[1]
	4.501	0.438	**CRWH1 V**	**34892**
	4.626	0.438	**CRWH1 R**	**34985**
	4.751	0.375	**CRWA1 V**	**35039**
	4.751	0.375	**CRWA1 P**	**35040**
	4.751	0.438	**CRWH1 R**	**35012**
	4.751	0.438	**CRWHA1 R**	**35020**
	4.751	0.625	**CRWH1 R**	**35029**
	4.999	0.438	**CRWA1 V**	**35080**
	4.999	0.438	**CRWH1 R**	**35082**
	4.999	0.438	**CRWHA1 P**	**35083**
	5.126	0.438	**CRWH1 R**	**35086**
	5.126	0.438	**CRWHA1 R**	**35095**
	5.251	0.438	**CRWH1 R**	**35096**
3.563	4.501	0.438	**CRWH1 R**	**35556**
	4.626	0.438	**CRWH1 R**	**35593**
	4.751	0.438	**CRWH1 R**	**35649**
	4.876	0.438	**CRWH1 R**	**35676**
	4.999	0.438	**CRWH1 R**	**35716**
3.625	4.376	0.375	**CRWA1 V**	**36153**
	4.376	0.375	**CRWA1 R**	**36155**
	4.376	0.375	**CRWH1 R**	**36157**
	4.376	0.375	**CRWH1 P**	**36158**
	4.501	0.375	**CRW1 R**	**36166**

Dimensions Shaft d_1	Bore D	Nominal seal width b	Design and lip material	Designation
in			–	–
3.625 cont.	4.626	0.375	**CRW1 R**	**36177**
	4.626	0.375	**CRWA1 V**	**36179**
	4.626	0.438	**CRWH1 R**	**36185**
	4.626	0.438	**CRWHA1 R**	**36186**
	4.751	0.438	**CRWH1 R**	**36220**
	4.751	0.500	**CRWA1 S**	**36234**
	4.876	0.438	**CRWH1 R**	**36314**
	4.999	0.375	**CRWA1 V**	**36359**
	4.999	0.375	**CRWA1 R**	**36361**
	4.999	0.438	**CRWH1 R**	**36363**
	4.999	0.438	**CRWHA1 R**	**36364**
	5.251	0.375	**CRWA1 R**	**36382**
	5.375	0.438	**CRWHA1 R**	**36391**
3.688	4.501	0.438	**CRWHA1 R**	**36740**
	4.751	0.438	**CRWH1 R**	**36770**
	4.999	0.438	**CRWH1 R**	**36880**
	5.126	0.438	**CRWA1 R**	**36895**
	5.626	0.438	**CRWA1 R**	**36910**
3.750	4.501	0.375	**CRW1 R**	**37327**[1]
	4.501	0.375	**CRW1 V**	**37328**
	4.501	0.469	**CRWHA1 P**	**37330**
	4.502	0.469	**CRWHA1 V**	**37332**
	4.750	0.438	**CRWHA1 P**	**37403**
	4.751	0.375	**CRW1 P**	**37387**
	4.751	0.375	**CRW1 R**	**37388**
	4.751	0.375	**CRWA1 R**	**37389**
	4.751	0.438	**CRWA1 P**	**37390**
	4.751	0.438	**CRWHA1 S**	**37395**
	4.751	0.438	**CRWH1 R**	**37396**
	4.751	0.438	**CRWH1 V**	**37405**
	4.876	0.438	**CRWH1 R**	**37433**
	4.999	0.375	**CRW1 V**	**37524**
	4.999	0.375	**CRW1 R**	**37525**

[1] Without SKF Bore Tite Coating

Dimensions Shaft d_1	Bore D	Nominal seal width b	Design and lip material	Designation
in			–	–
3.750 cont.	4.999	0.375	**CRWA1 R**	**37526**
	4.999	0.438	**CRWH1 R**	**37532**
	4.999	0.438	**CRWHA1 R**	**37533**
	5.251	0.438	**CRWH1 R**	**37574**
	5.251	0.438	**CRWH1 V**	**37577**
3.875	4.751	0.375	**CRW1 R**	**38646**
	4.751	0.375	**CRWA1 R**	**38647**
	4.751	0.375	**CRWA1 V**	**38649**
	4.751	0.438	**CRWH1 R**	**38653**
	4.876	0.438	**CRWHA1 R**	**38673**
	4.876	0.500	**CRWH1 R**	**38669**
	4.876	0.500	**CRWHA1 V**	**38678**
	4.999	0.375	**CRW1 R**	**38691**
	4.999	0.375	**CRWA1 R**	**38692**
	4.999	0.375	**CRWA1 V**	**38694**
	5.126	0.438	**CRWHA1 V**	**38702**
	5.126	0.438	**CRWH1 R**	**38703**
	5.126	0.438	**CRWHA1 R**	**38713**
3.875	5.251	0.438	**CRWH1 R**	**38730**
	5.251	0.438	**CRWHA1 R**	**38731**
	5.251	0.438	**CRWHA1 P**	**38739**
	5.376	0.438	**CRWH1 R**	**38745**
	5.626	0.433	**CRWHA1 R**	**38758**
	5.690	0.500	**CRWH1 R**	**38774**
3.938	4.876	0.438	**CRWH1 R**	**39245**
	4.999	0.438	**CRWH1 R**	**39275**
	4.999	0.438	**CRWH1 V**	**39276**
	4.999	0.438	**CRWH1 R**	**39277**
	5.126	0.472	**CRWHA1 V**	**39304**
	5.251	0.438	**CRWH1 R**	**39320**
	5.375	0.438	**CRWH1 R**	**39350**
	5.501	0.438	**CRWH1 R**	**39423**
4.000	4.876	0.438	**CRW1 R**	**39851**
	4.999	0.375	**CRW1 P**	**39895**
	4.999	0.375	**CRWA1 V**	**39921**
	4.999	0.375	**CRW1 R**	**39922**
	4.999	0.375	**CRWA1 R**	**39923**
	4.999	0.438	**CRWHA1 P**	**39930**
	4.999	0.438	**CRWH1 V**	**39932**
	4.999	0.438	**CRWH1 R**	**39933**
	4.999	0.438	**CRWHA1 R**	**39934**
	4.999	0.438	**CRWH1 S**	**39935**
	5.126	0.438	**CRWH1 R**	**39975**
	5.251	0.438	**CRWH1 V**	**39996**
	5.251	0.438	**CRWH1 R**	**39997**
	5.251	0.438	**CRWA1 R**	**40000**
	5.310	0.500	**CRWHA1 R**	**40020**
	5.376	0.438	**CRWH1 R**	**40036**
	5.501	0.438	**CRWH1 R**	**40049**
4.000	5.626	0.375	**CRWA1 R**	**40077**
	5.626	0.438	**CRWH1 R**	**40078**
	5.751	0.438	**CRWH1 R**	**40108**
	6.001	0.500	**CRWH1 R**	**40138**
	6.250	0.500	**CRWH1 R**	**40158**

Dimensions Shaft d_1	Bore D	Nominal seal width b	Design and lip material	Designation
in			–	–
4.125	4.999	0.438	**CRWH1 R**	**41125**
	4.999	0.438	**CRWH1 V**	**41126**[1)]
	5.126	0.438	**CRWH1 R**	**41170**
	5.126	0.438	**CRWH1 V**	**41171**
	5.251	0.438	**CRWH1 R**	**41185**
	5.251	0.438	**CRWH1 V**	**41186**
	5.501	0.438	**CRWH1 R**	**41265**
	5.501	0.438	**CRWH1 V**	**41266**
	5.751	0.438	**CRWH1 R**	**41287**
	6.001	0.438	**CRWH1 R**	**41305**
	6.001	0.438	**CRWH1 V**	**41307**
4.250	5.251	0.375	**CRWA1 R**	**42419**
	5.251	0.375	**CRW1 S**	**42422**
	5.251	0.438	**CRWH1 R**	**42426**
	5.251	0.438	**CRWHA1 R**	**42427**
	5.251	0.438	**CRWH1 V**	**42433**
	5.373	0.438	**CRWA1 V**	**42474**
	5.376	0.438	**CRWH1 R**	**42475**
	5.501	0.438	**CRWH1 R**	**42528**
	5.626	0.438	**CRWA1 R**	**42557**
	5.751	0.438	**CRWH1 R**	**42573**
	5.876	0.500	**CRWH1 V**	**42592**
	6.001	0.500	**CRWH1 R**	**42616**
	6.126	0.500	**CRWH1 R**	**42635**
	6.250	0.500	**CRWH1 R**	**42644**
4.313	5.501	0.433	**CRWHA1 P**	**43072**
	5.501	0.438	**CRWHA1 R**	**43073**
4.331	5.626	0.472	**CRWHA1 V**	**43345**
4.375	5.376	0.438	**CRWH1 R**	**43650**
	5.501	0.438	**CRWH1 R**	**43691**
	5.751	0.438	**CRWH1 R**	**43751**
	6.001	0.500	**CRWH1 R**	**43771**
	6.063	0.500	**CRWH1 R**	**541974**[1)]
	6.250	0.500	**CRWH1 R**	**43820**
4.438	5.501	0.500	**CRWH1 R**	**44275**
	5.501	0.500	**CRWH1 V**	**44276**
	5.751	0.500	**CRWH1 R**	**44295**
	6.001	0.500	**CRWH1 R**	**44320**
	6.250	0.500	**CRWH1 R**	**44350**
4.477	6.250	0.500	**CRWH1 R**	**44630**
4.500	5.251	0.438	**CRWH1 R**	**44913**
	5.251	0.438	**CRWHA1 V**	**44917**
	5.376	0.438	**CRWH1 R**	**44920**
	5.376	0.438	**CRWHA1 V**	**44926**
	5.501	0.375	**CRW1 R**	**44959**
	5.501	0.375	**CRWA1 R**	**44960**
	5.501	0.435	**CRWH1 V**	**44980**
	5.501	0.438	**CRWH1 R**	**44967**
	5.501	0.438	**CRWHA1 R**	**44968**
	5.501	0.438	**CRWH1 V**	**44973**

d_1 **4.500–8.000** in

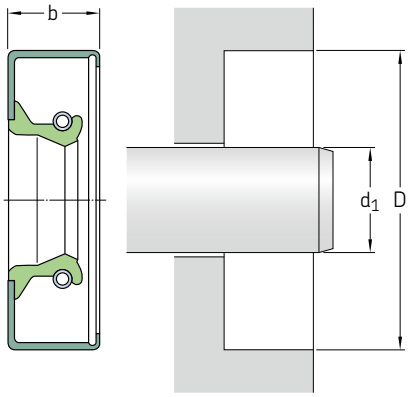

Please see **pages 83** to **86** for housing bore requirements.

Dimensions Shaft d_1	Bore D	Nominal seal width b	Design and lip material	Designation
in			–	–
4.500 cont.	5.626	0.438	**CRWH1 R**	**45032**
	5.626	0.438	**CRWHA1 V**	**45033**
	5.751	0.375	**CRWA1 V**	**45064**
	5.751	0.438	**CRWH1 R**	**45069**
	5.751	0.438	**CRWHA1 R**	**45070**
	6.001	0.500	**CRWH1 R**	**45110**
	6.001	0.500	**CRWHA1 R**	**45111**
	6.001	0.500	**CRWHA1 V**	**45112**
	6.126	0.563	**CRWH1 R**	**45140**
	6.250	0.500	**CRWH1 R**	**45150**
4.625	5.626	0.500	**CRWH1 R**	**46144**
	5.626	0.500	**CRWH1 V**	**46155**
	5.751	0.500	**CRWH1 R**	**46200**
	5.751	0.500	**CRWH1 S**	**46208**
	6.001	0.500	**CRWH1 R**	**46285**
	6.250	0.500	**CRWH1 R**	**46324**
4.688	5.751	0.512	**CRWH1 S**	**46770**
	5.751	0.512	**CRWH1 R**	**46800**
	6.250	0.500	**CRWH1 R**	**46950**
4.750	5.749	0.438	**CRW1 P**	**47375**
	5.751	0.500	**CRW1 V**	**47379**
	5.751	0.500	**CRWA1 V**	**47382**
	5.751	0.500	**CRW1 R**	**47383**
	5.751	0.500	**CRWH1 R**	**47394**
	5.751	0.500	**CRWHA1 R**	**47395**
	5.875	0.500	**CRWH1 R**	**47441**
	6.001	0.500	**CRWH1 R**	**47474**
	6.001	0.500	**CRWHA1 R**	**47475**
	6.001	0.500	**CRW1 V**	**47481**
	6.250	0.500	**CRWH1 R**	**47583**
	6.250	0.500	**CRWHA1 V**	**47586**
4.813	5.751	0.563	**CRWH1 P**	**48060**
	5.751	0.563	**CRWH1 V**	**48062**
	5.751	0.563	**CRWH1 S**	**48065**
4.875	6.001	0.500	**CRWH1 V**	**48692**
	6.001	0.500	**CRWH1 R**	**48693**
	6.126	0.500	**CRWH1 R**	**48726**
	6.250	0.500	**CRWHA1 R**	**48768**
	6.250	0.500	**CRWH1 R**	**48769**
	6.250	0.500	**CRWH1 V**	**48772**
4.921	6.375	0.500	**CRWHA1 V**	**49274**
4.938	6.001	0.500	**CRWH1 R**	**49251**
	6.250	0.500	**CRWH1 R**	**49301**
5.000	6.001	0.500	**CRWHA1 V**	**49927**
	6.001	0.500	**CRWH1 R**	**49928**
	6.001	0.500	**CRWHA1 R**	**49929**
	6.126	0.500	**CRW1 V**	**49960**
	6.250	0.500	**CRWH1 R**	**49966**
	6.250	0.500	**CRW1 R**	**49984**
	6.250	0.500	**CRWA1 R**	**49985**
	6.250	0.500	**CRWH1 P**	**49990**[1]
	6.250	0.500	**CRWH1 V**	**49991**
	6.250	0.500	**CRWHA1 R**	**49998**
	6.375	0.500	**CRWH1 R**	**50130**
	6.375	0.500	**CRWHA1 R**	**50138**
	6.500	0.500	**CRWH1 R**	**50148**
	6.500	0.500	**CRWH1 V**	**50151**
	6.750	0.500	**CRWH1 R**	**50168**
	6.750	0.500	**CRWHA1 R**	**50172**
5.063	6.126	0.500	**CRWH1 R**	**50618**
	6.375	0.500	**CRWH1 R**	**50650**
5.125	6.126	0.500	**CRWHA1 R**	**51240**
	6.126	0.500	**CRW1 V**	**51243**
	6.126	0.500	**CRW1 R**	**51247**

[1] Without SKF Bore Tite Coating

Dimensions Shaft d_1	Bore D	Nominal seal width b	Design and lip material	Designation
in			–	–
5.125 cont.	6.250	0.500	**CRWHA1 R**	**51252**
	6.250	0.500	**CRWA1 V**	**51253**
	6.375	0.500	**CRWH1 R**	**51248**[1)]
	6.375	0.500	**CRWH1 V**	**51255**
5.188	6.501	0.625	**CRWH1 V**	**51852**
5.250	6.001	0.375	**CRW1 R**	**52440**
	6.001	0.500	**CRWH1 V**	**52443**
	6.250	0.500	**CRWH1 R**	**52445**
	6.250	0.500	**CRWH1 V**	**52447**
	6.500	0.500	**CRWH1 R**	**52488**
	6.500	0.500	**CRWH1 V**	**52489**
	6.750	0.500	**CRWH1 R**	**52648**
	6.750	0.500	**CRWH1 V**	**52649**
5.375	6.625	0.500	**CRWH1 R**	**53701**
	6.625	0.500	**CRWH1 V**	**53702**
	6.750	0.500	**CRWH1 V**	**53771**
	6.750	0.500	**CRWH1 R**	**53775**
5.500	6.250	0.500	**CRWA1 R**	**54925**
	6.500	0.500	**CRWH1 R**	**54931**
	6.500	0.500	**CRWH1 V**	**54934**
	6.500	0.500	**CRWH1 P**	**54936**
	6.750	0.500	**CRW1 R**	**54959**
	6.750	0.500	**CRWA1 R**	**54960**
	6.750	0.500	**CRWHA1 R**	**54971**
	6.750	0.500	**CRWH1 R**	**54972**
	6.750	0.500	**CRWH1 V**	**54974**
5.512	6.693	0.472	**CRWH1 V**	**546747**[1)]
5.625	6.625	0.500	**CRWH1 R**	**56101**
	6.625	0.500	**CRWH1 V**	**56102**
	6.875	0.500	**CRWH1 R**	**56136**
	6.875	0.500	**CRWH1 V**	**56137**
5.625	7.125	0.500	**CRWHA1 R**	**56160**
	7.125	0.500	**CRWHA1 V**	**56161**
5.750	6.625	0.500	**CRWH1 R**	**57505**
	6.625	0.500	**CRW1 V**	**57506**
	6.750	0.500	**CRWH1 R**	**57510**
	6.750	0.500	**CRWH1 V**	**57522**
	6.751	0.500	**CRWHA1 R**	**57509**[1)]
	7.000	0.500	**CRWH1 R**	**57521**
	7.000	0.500	**CRWH1 V**	**57523**
	7.000	0.500	**CRWHA1 R**	**57531**
5.875	7.125	0.500	**CRWH1 R**	**58716**
	7.125	0.500	**CRWH1 V**	**58717**
	7.125	0.500	**CRWHA1 R**	**58741**
	7.500	0.500	**CRWH1 R**	**58760**
6.000	6.750	0.500	**CRWA1 V**	**59999**
	6.750	0.500	**CRW1 V**	**60000**

Dimensions Shaft d_1	Bore D	Nominal seal width b	Design and lip material	Designation
in			–	–
6.000 cont.	7.500	0.500	**CRWA1 R**	**60016**
	7.500	0.500	**CRWHA1 V**	**60026**
	7.500	0.500	**CRWHA1 R**	**60028**
6.125	7.125	0.625	**CRWH1 R**	**61210**[1)]
	7.625	0.625	**CRWH1 R**	**61255**[1)]
	7.625	0.625	**CRWH1 P**	**61256**[1)]
6.250	7.252	0.500	**CRWH1 R**	**62482**[1)]
	7.500	0.500	**CRWH1 R**	**62495**[1)]
	7.500	0.500	**CRWH1 V**	**62497**
	7.750	0.500	**CRWH1 R**	**62535**
	7.875	0.625	**CRWH1 R**	**62572**
6.375	7.375	0.625	**CRWH1 R**	**63700**
	7.875	0.563	**CRWHA1 R**	**63734**
	7.875	0.625	**CRWH1 R**	**63733**[1)]
6.500	7.500	0.500	**CRWA1 R**	**64993**
	7.500	0.500	**CRWH1 R**	**64994**[1)]
	7.500	0.500	**CRWH1 V**	**64998**
	8.000	0.500	**CRW1 R**	**65021**
	8.000	0.500	**CRWHA1 R**	**65037**[1)]
6.625	8.125	0.500	**CRWH1 R**	**66241**[1)]
6.750	8.000	0.500	**CRWH1 R**	**67515**
	8.250	0.500	**CRWH1 R**	**67533**[1)]
6.875	8.375	0.500	**CRWH1 R**	**68745**[1)]
7.000	8.000	0.630	**CRWH1 R**	**70016**
	8.250	0.625	**CRWH1 R**	**70028**[1)]
	8.500	0.500	**CRWA1 R**	**70080**
	8.500	0.625	**CRWH1 R**	**70052**
	8.500	0.625	**CRWHA1 R**	**70053**
	8.500	0.625	**CRWHA1 V**	**70054**
7.125	8.625	0.625	**CRWH1 R**	**71245**[1)]
7.250	8.250	0.625	**CRW1 R**	**72515**[1)]
	8.750	0.625	**CRWHA1 R**	**72539**
	8.750	0.750	**CRWH1 P**	**72542**[1)]
	9.055	0.625	**CRWHA1 R**	**72570**
7.375	8.875	0.625	**CRWH1 R**	**73745**[1)]
7.500	8.500	0.625	**CRWH1 R**	**75030**[1)]
	9.000	0.625	**CRWH1 R**	**75050**
	9.000	0.625	**CRWHA1 P**	**75052**
7.625	8.625	0.563	**CRWH1 R**	**76215**[1)]
	9.125	0.625	**CRWH1 R**	**76255**[1)]
7.750	9.250	0.625	**CRWH1 R**	**77540**[1)]
7.875	9.250	1.000	**CRWHA1 R**	**78725**[1)]
	9.375	0.625	**CRWH1 R**	**78738**[1)]
8.000	9.000	0.625	**CRWH1 R**	**79960**[1)]
	9.000	0.625	**CRWHA1 R**	**79961**[1)]
	9.250	0.625	**CRWH1 R**	**79997**[1)]
	9.250	0.625	**CRWHA1 R**	**79998**
	9.500	0.625	**CRWH1 R**	**80010**
	10.000	0.625	**CRWHA1 R**	**80038**[1)]

d_1 **8.125–12.250** in

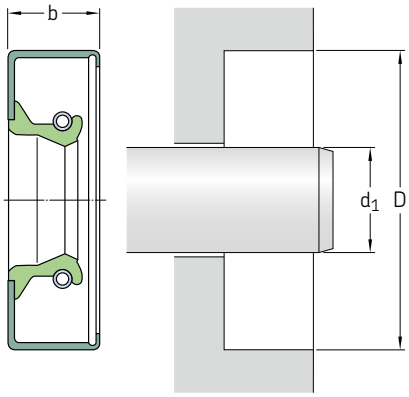

Please see **pages 83** to **86** for housing bore requirements.

Dimensions Shaft d_1	Bore D	Nominal seal width b	**Design and lip material**	**Designation**
in			–	–
8.125	10.125	0.625	**CRWH1 R**	**81245**[1]
	10.125	0.625	**CRWHA1 R**	**81246**[1]
8.250	9.250	0.625	**CRWH1 R**	**82510**[1]
	9.252	0.500	**CRWH1 R**	**82527**
	9.500	0.578	**CRW1 R**	**541405**[1]
	10.250	0.625	**CRWH1 R**	**82560**[1]
8.500	9.750	0.625	**CRWH1 R**	**85002**
	10.000	0.625	**CRWH1 R**	**85009**[1]
	10.500	0.625	**CRWH1 R**	**85015**[1]
	10.625	0.625	**CRWHA1 R**	**85085**[1]
8.625	10.625	0.625	**CRWH1 R**	**86260**[1]
8.750	10.750	0.625	**CRWH1 R**	**87541**[1]
8.875	10.125	0.625	**CRWH1 R**	**88710**[1]
	10.875	0.625	**CRWH1 R**	**88760**[1]
9.000	10.000	0.625	**CRWH1 R**	**90006**[1]
	11.000	0.625	**CRWH1 R**	**90036**[1]
9.250	11.250	0.625	**CRWHA1 R**	**92536**
	12.750	0.625	**CRWHA1 R**	**92570**[1]
	12.750	1.250	**CRWHA1 R**	**92574**[1]
9.500	10.500	0.438	**CRW1 R**	**95048**
	11.500	0.625	**CRW1 R**	**95062**
9.625	11.625	0.625	**CRWH1 R**	**96245**[1]
	11.125	0.625	**CRWH1 R**	**97542**[1]
	11.250	0.625	**CRWH1 R**	**97545**[1]
	11.750	0.625	**CRWH1 R**	**97550**[1]
10.000	11.252	0.625	**CRWHA1 R**	**100044**[1]
	12.000	0.625	**CRWH1 R**	**100051**[1]
	12.000	0.625	**CRWA1 R**	**100075**
10.250	11.250	0.563	**CRWH1 R**	**102520**[1]
	12.250	0.625	**CRWH1 R**	**102540**[1]

Dimensions Shaft d_1	Bore D	Nominal seal width b	**Design and lip material**	**Designation**
in			–	–
10.500	11.750	0.625	**CRWH1 R**	**105010**[1]
	12.500	0.625	**CRWH1 R**	**105051**[1]
10.750	12.750	0.625	**CRWH1 R**	**107551**[1]
11.000	12.250	0.625	**CRWHA1 R**	**110030**[1]
	13.000	0.625	**CRWH1 R**	**110051**[1]
11.375	13.000	0.625	**CRW1 R**	**113740**[1]
11.500	13.000	0.625	**CRWH1 R**	**115021**[1]
	13.500	0.625	**CRWH1 R**	**115041**[1]
12.000	14.000	0.625	**CRW1 R**	**120060**[1]
12.250	13.375	0.625	**CRWH1 R**	**122555**[1]
	13.813	0.625	**CRW1 R**	**122580**[1]
	14.250	1.000	**CRWHA1 R**	**122590**[1]

[1] Without SKF Bore Tite Coating

CRW5 and CRWA5 seals

Fig. 7

CRW5

Fig. 8

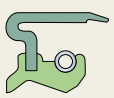

CRWA5

Main features

CRW5 and CRWA5 seals are designed to withstand moderate pressure differentials. They have an SKF Wave lip to reduce heat generation and a metal outside diameter for easy installation and a firm and accurate fit in the housing bore. See **pages 68** and **69** for more information on SKF Wave lip design. Most of them have SKF Bore Tite Coating on the outside diameter. The CRWA5 seals have an auxiliary lip, providing additional contaminant exclusion ability. A shoulder or retaining ring should be used at the low-pressure side of the seal to prevent it from being pressed out of the housing bore.

Design

- **CRW5:** Seal with one steel case, SKF Wave lip and a carbon steel garter spring.
- **CRWA5:** Seal with one steel case, SKF Wave lip, a carbon steel garter spring and an auxiliary, contacting lip.

The CRW5 and CRWA5 seals are available in inch sizes with sealing lips made of either nitrile rubber or the SKF fluoro rubber compound SKF Duralife. Other materials are also available on request.

See **matrix 1** on **pages 104** and **105** for permissible operating conditions.

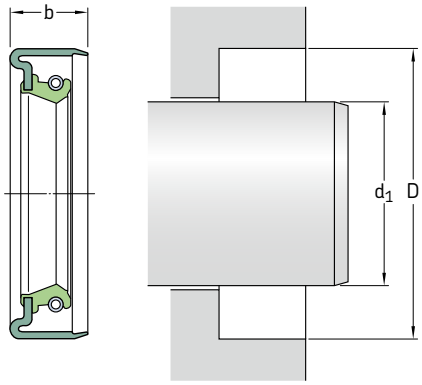

Please see **pages 83** to **86** for housing bore requirements.

Dimensions Shaft d_1	Bore D	Nominal seal width b	**Design and lip material**	**Designation**
in			–	–
0.313	0.686	0.313	**CRWA5 R**	3094[1)]
	0.749	0.250	**CRWA5 R**	3101[1)]
	0.749	0.250	**CRWA5 V**	3103[1)]
	0.999	0.313	**CRWA5 R**	3171[1)]
0.375	0.749	0.250	**CRW5 R**	3689[1)]
	1.124	0.375	**CRW5 V**	3807
0.500	0.875	0.313	**CRWA5 R**	4940
	0.875	0.313	**CRWA5 V**	4941
	0.999	0.250	**CRWA5 V**	4991
	0.999	0.313	**CRWA5 R**	4996
	1.124	0.250	**CRWA5 R**	5069
	1.124	0.250	**CRWA5 V**	5072
0.625	0.999	0.250	**CRWA5 R**	6151
	1.124	0.250	**CRW5 R**	6191
	1.124	0.374	**CRWA5 V**	6231
	1.124	0.375	**CRWA5 R**	6229
	1.126	0.250	**CRW5 R**	6242
	1.250	0.313	**CRWA5 R**	6280[1)]
	1.250	0.313	**CRWA5 V**	6285[1)]
	1.375	0.250	**CRW5 P**	6371
	1.375	0.375	**CRWA5 R**	6388
	1.500	0.313	**CRW5 V**	6393
0.750	1.250	0.250	**CRWA5 R**	7434
	1.250	0.375	**CRWA5 R**	7449
	1.375	0.250	**CRWA5 V**	7509
0.875	1.250	0.250	**CRWA5 V**	8634
	1.375	0.250	**CRWA5 R**	8660
	1.375	0.250	**CRWA5 V**	8665
	1.497	0.313	**CRWA5 V**	8694
0.984	1.596	0.250	**CRWA5 R**	9700
	1.752	0.313	**CRWA5 V**	9805

Dimensions Shaft d_1	Bore D	Nominal seal width b	**Design and lip material**	**Designation**
in			–	–
1.000	1.375	0.250	**CRWA5 R**	9814
	1.499	0.250	**CRWA5 R**	9843
	1.499	0.250	**CRW5 R**	9855[1)]
	1.499	0.250	**CRWA5 V**	9858
	1.500	0.250	**CRWA5 R**	9863
	1.752	0.313	**CRWA5 R**	9967
	2.000	0.313	**CRWA5 R**	10131

[1)] Without SKF Bore Tite Coating

HDW1 seals

Fig. 9

HDW1

Main features

HDW1 seals are heavy-duty SKF Wave lip seals, designed for use in grease or oil lubricated applications. The seals are produced as a standard with a heavy-duty seal body, SKF Bore Tite Coating on the metal outside diameter, SKF Wave lip in nitrile rubber, and a carbon steel garter spring.

The rigid seal body can withstand operating pressures up to 0,24 MPa *(35 psi)*, dynamic, and 0,34 MPa *(50 psi)*, static, while withstanding shaft speeds up to 25 m/s *(4 900 ft/min)* at shaft diameters < 203 mm *(8 in)*.

The HDW1 seals are available in inch sizes.

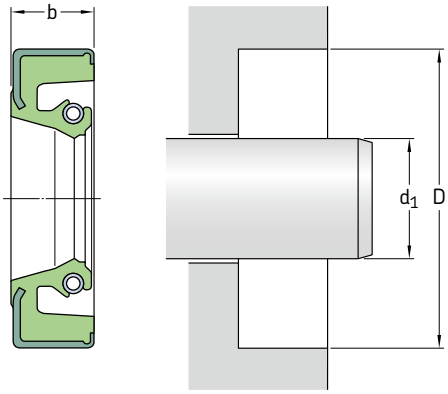

Please see **pages 83** to **86** for housing bore requirements.

Dimensions Shaft d_1	Bore D	Nominal seal width b	**Design and lip material**	**Designation**
in			–	–
5.000	6.125	0.500	**HDW1 R**	49951
	7.125	0.500	**HDW1 R**	50186
5.063	6.125	0.500	**HDW1 R**	50620
5.125	6.625	0.500	**HDW1 R**	51277
	7.000	0.500	**HDW1 R**	51330
5.188	6.250	0.500	**HDW1 R**	51800
5.250	6.750	0.500	**HDW1 R**	52651
	7.125	0.500	**HDW1 R**	52655
5.313	6.375	0.500	**HDW1 R**	53100
5.438	6.625	0.500	**HDW1 R**	54300
5.875	6.875	0.500	**HDW1 R**	58709[1)]
	7.000	0.500	**HDW1 R**	58710
5.938	7.000	0.500	**HDW1 R**	59300
6,000	7.250	0.500	**HDW1 R**	60009
6.063	7.500	0.500	**HDW1 R**	60650
6.125	7.125	0.500	**HDW1 R**	61215
	7.250	0.500	**HDW1 R**	61230
	7.375	0.500	**HDW1 R**	61235
6.250	7.250	0.500	**HDW1 R**	62480
6.375	7.500	0.500	**HDW1 R**	63717
6.438	7.500	0.500	**HDW1 R**	64330
6.625	7.625	0.500	**HDW1 R**	66217
	7.750	0.500	**HDW1 R**	66219
	7.875	0.500	**HDW1 R**	66222
	8.000	0.500	**HDW1 R**	66230
6.750	7.750	0.500	**HDW1 R**	67510
	8.750	0.500	**HDW1 R**	67600

Dimensions Shaft d_1	Bore D	Nominal seal width b	**Design and lip material**	**Designation**
in			–	–
6.875	8.250	0.500	**HDW1 R**	68730
	8.500	0.500	**HDW1 R**	68760
7.125	8.250	0.500	**HDW1 R**	71220
7.375	8.375	0.500	**HDW1 R**	73720
	8.500	0.500	**HDW1 R**	73730
7.500	8.750	0.500	**HDW1 R**	75046
	9.250	0.500	**HDW1 R**	75069
7.625	8.875	0.500	**HDW1 R**	76225
7.750	8.750	0.500	**HDW1 R**	77506
7.875	8.875	0.500	**HDW1 R**	78710
7.938	9.125	0.500	**HDW1 R**	79620

[1)] Stainless steel garter spring

CRS1, CRSH1, CRSA1 and CRSHA1 seals

Fig. 10

CRS1

Fig. 11

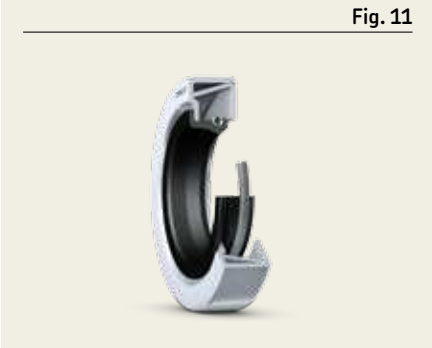

CRSH1

Fig. 12

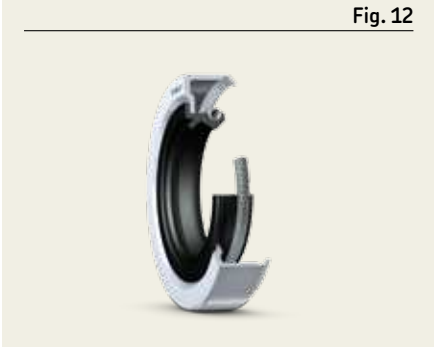

CRSA1

Fig. 13

CRSHA1

Main features

All CRS seals are designed with a metal case and a conventional spring-loaded sealing lip. Some of them have a sealant on the outside diameter to compensate for imperfections in the housing bore.

Design

- **CRS1:** Seal with a single steel case, a conventional sealing lip and a carbon steel garter spring.
- **CRSA1:** Seal with a single steel case, a conventional sealing lip, a carbon steel garter spring and a contacting auxiliary lip.
- **CRSH1:** Seal with a double steel case, a conventional sealing lip and a carbon steel garter spring.
- **CRSHA1:** Seal with a double steel case, a conventional sealing lip, a carbon steel garter spring and a contacting auxiliary lip.

CRS seals are available with sealing lips made of nitrile rubber for general-purpose applications and of fluoro rubber, providing improved high temperature and chemical resistance.

See **matrix 1** on **pages 104** and **105** for permissible operating conditions.

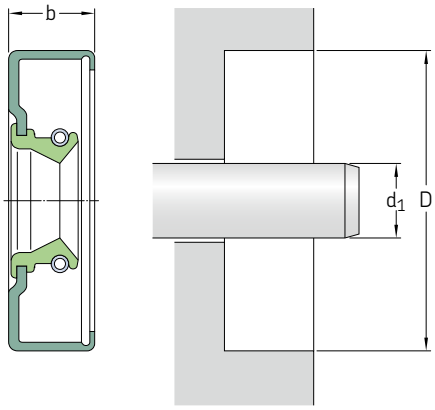

Please see **pages 83** to **86** for housing bore requirements.

Dimensions Shaft d_1	Bore D	Nominal seal width b	Design and lip material	Designation
mm			–	–
12	20	5	CRSA1 R	**12×20×5 CRSA1 R**
13	28	7	CRS1 R	**13×28×7 CRS1 R**
19	37	10	CRS1 V	**19×37×10 CRS1 V**
20	30	5	CRS1 R	**20×30×5 CRS1 R**
	30	7	CRS1 V	**20×30×7 CRS1 V**
	32	7	CRS1 V	**20×32×7 CRS1 V**
	42	7	CRS1 V	**20×42×7 CRS1 V**
22	32	7	CRS1 V	**22×32×7 CRS1 V**
24	38	10	CRS1 R	**24×38×10 CRS1 R**
25	32	7	CRSA1 R	**25×32×7 CRSA1 R**
	47	10	CRSA1 V	**25×47×10 CRSA1 V**
	52	7	CRS1 R	**25×52×7 CRS1 R**
26	35	7	CRS1 R	**26×35×7 CRS1 R**
	42	8	CRS1 R	**26×42×8 CRS1 R**
27	37	7	CRS1 V	**27×37×7 CRS1 V**
	41	10	CRSH1 R	**27×41×10 CRSH1 R**
28	62	12	CRSH1 R	**28×62×12 CRSH1 R**
30	45	8	CRS1 V	**30×45×8 CRS1 V**
	52	9	CRSH1 R	**30×52×9 CRSH1 R**
32	46	8	CRS1 R	**32×46×8 CRS1 R**
34	52	10	CRS1 R	**34×52×10 CRS1 R**
	54	11	CRS1 R	**34×54×11 CRS1 R**
35	64	8	CRSA1 P	**35×64×8 CRSA1 P**
	65	12	CRSA1 R	**35×65×12 CRSA1 R**
36	46	9	CRS1 R	**36×46×9 CRS1 R**
	56	10	CRS1 R	**36×56×10 CRS1 R**
37	55	10	CRSH1 R	**37×55×10 CRSH1 R**
40	55	10	CRS1 R	**40×55×10 CRS1 R**
	60	10	CRSA1 R	**40×60×10 CRSA1 R**
42	62	10	CRS1 R	**42×62×10 CRS1 R**
43	62	10	CRSH1 R	**43×62×10 CRSH1 R**
45	58	9	CRSA1 R	**45×58×9 CRSA1 R**
	62	7	CRSA1 R	**45×62×7 CRSA1 R**
48	70	9	CRSA1 R	**48×70×9 CRSA1 R**
50	62	7	CRS1 R	**50×62×7 CRS1 R**
	62	10	CRS1 R	**50×62×10 CRS1 R**
	85	13	CRSH1 R	**50×85×13 CRSH1 R**
54	72	10	CRSA1 R	**54×72×10 CRSA1 R**
	80	10	CRSH1 R	**54×80×10 CRSH1 R**
57	72	10	CRSH1 R	**57×72×10 CRSH1 R**
58	85	13	CRSH1 R	**58×85×13 CRSH1 R**
59	75	10	CRSA1 R	**59×75×10 CRSA1 R**
60	70	7	CRS1 R	**60×70×7 CRS1 R**
	78	9	CRS1 R	**60×78×9 CRS1 R**[1]
	80	10	CRSHA1 R	**60×80×10 CRSHA1 R**
	90	10	CRSH1 R	**60×90×10 CRSH1 R**
62	75	10	CRS1 R	**62×75×10 CRS1 R**
66	80	8,9	CRSHA1 R	**66×80×9 CRSHA1 R**
	85	10	CRSHA1 R	**66×85×10 CRSHA1 R**
	90	13	CRSH1 R	**66×90×13 CRSH1 R**
68	85	10	CRS1 R	**68×85×10 CRS1 R**
74	100	13	CRSH1 R	**74×100×13 CRSH1 R**
75	115	13	CRSH1 R	**75×115×13 CRSH1 R**
80	100	13	CRSA1 R	**80×100×13 CRSA1 R**
	125	13	CRSH1 R	**80×125×13 CRSH1 R**

[1] Sealant on outside diameter

d_1 **85–260** mm

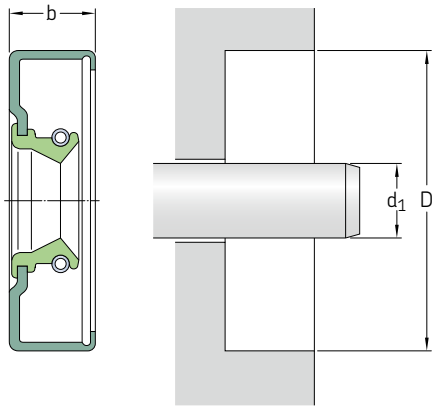

Please see **pages 83** to **86** for housing bore requirements.

Dimensions Shaft d_1	Bore D	Nominal seal width b	**Design and lip material**	**Designation**
mm			–	**–**
85	100	9	CRS1 R	**85×100×9 CRS1 R**
88	110	13	CRSH1 R	**88×110×13 CRSH1 R**
90	125	13	CRSH1 R	**90×125×13 CRSH1 R**
95	110	9	CRS1 R	**95×110×9 CRS1 R**
100	120	13	CRSH1 R	**100×120×13 CRSH1 R**
105	125	12	CRS1 R	**105×125×12 CRS1 R**
107	123	11	CRSA1 R	**107×123×11 CRSA1 R**
108	130	13	CRSH1 R	**108×130×13 CRSH1 R**
113	140	13	CRSH1 R	**113×140×13 CRSH1 R**
115	160	15	CRSH1 R	**115×160×15 CRSH1 R**
120	150	15	CRSH1 R	**120×150×15 CRSH1 R**
125	146	14	CRSA1 P	**125×146×14 CRSA1 P**
126	147	11	CRSA1 R	**126×147×11 CRSA1 R**
130	150	10	CRSA1 R	**130×150×10 CRSA1 R**
	150	14	CRSA1 R	**130×150×14 CRSA1 R**
	155	10	CRSH1 R	**130×155×10 CRSH1 R**
	160	13	CRS1 R	**130×160×13 CRS1 R**
	160	13	CRSA1 R	**130×160×13 CRSA1 R**
	165	13	CRSH1 R	**130×165×13 CRSH1 R**
135	160	13	CRSH1 R	**135×160×13 CRSH1 R**
	170	15	CRSH1 R	**135×170×15 CRSH1 R**
138	152	12	CRSA1 R	**138×152×12 CRSA1 R**
145	164	14	CRSA1 R	**145×164×14 CRSA1 R**
	175	14	CRS1 R	**145×175×14 CRS1 R**
150	170	15	CRSH1 R	**150×170×15 CRSH1 R**
	180	13	CRSH1 R	**150×180×13 CRSH1 R**
	200	15	CRSH1 R	**150×200×15 CRSH1 R**

Dimensions Shaft d_1	Bore D	Nominal seal width b	**Design and lip material**	**Designation**
mm			–	**–**
154	175	13	CRSA1 R	**154×175×13 CRSA1 R**
160	185	13	CRSA1 V	**160×185×13 CRSA1 V**
168	200	15	CRSH1 R	**168×200×15 CRSH1 R**
170	190	15	CRSH1 R	**170×190×15 CRSH1 R**
180	200	12	CRS1 R	**180×200×12 CRS1 R**
	215	16	CRS1 R	**180×215×16 CRS1 R**
	220	16	CRSA1 R	**180×220×16 CRSA1 R**
190	215	16	CRSH1 R	**190×215×16 CRSH1 R**
195	230	15	CRSH1 R	**195×230×15 CRSH1 R**
200	250	15	CRSH1 R	**200×250×15 CRSH1 R**
260	300	20	CRS1 R	**260×300×20 CRS1 R**

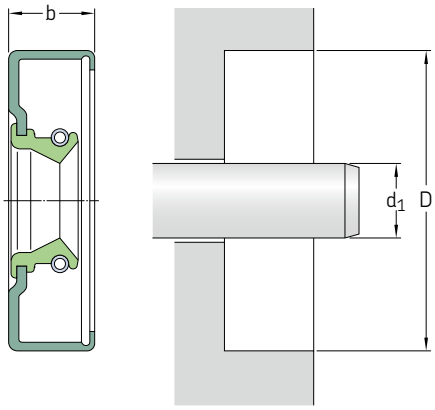

Dimensions Shaft d_1	Bore D	Nominal seal width b	Design and lip material	Designation
in			–	–
0.531	1.124	0.313	CRSA1 R	**5334**
0.594	1.250	0.313	CRSA1 R	**5950**
	1.375	0.313	CRSA1 R	**5966**[1]
0.669	1.339	0.311	CRSA1 P	**6992**
0.709	1.339	0.315	CRSA1 P	**7089**
0.781	1.752	0.313	CRSHA1 R	**8213**
0.844	1.828	0.313	CRSA1 R	**8485**
0.945	1.575	0.315	CRS1 R	**9515**
0.969	2.048	0.375	CRS1 R	**9688**[1]
1.125	2.835	0.375	CRSA1 R	**11405**[1]
	2.875	0.469	CRSH1 R	**11410**[1]
1.156	2.125	0.438	CRSH1 R	**11566**[1]
1.219	2.000	0.438	CRSH1 R	**12131**[1]
1.250	2.561	0.500	CRSH1 R	**12655**
	2.713	0.469	CRSH1 R	**12660**[1]
	3.156	0.500	CRSH1 R	**12678**
1.301	2.000	0.438	CRSA1 P	**12905**
1.313	1.874	0.375	CRSA1 R	**13027**[1]
	2.000	0.313	CRSA1 R	**13037**[1]
	2.106	0.375	CRSA1 R	**13084**[1]
	2.996	0.500	CRSH1 R	**13275**[1]
1.328	2.312	0.433	CRS1 R	**13419**[1]
1.362	2.191	0.250	CRS1 P	**13500**
1.375	2.750	0.500	CRSH1 R	**13906**[1]
	3.000	0.500	CRSHA1 R	**13937**
	3.125	0.500	CRSH1 R	**13936**
	3.350	0.469	CRSH1 R	**13934**[1]

Dimensions Shaft d_1	Bore D	Nominal seal width b	Design and lip material	Designation
in			–	–
1.399	2.292	0.469	CRSA1 R	**13992**[1]
	2.292	0.500	CRSA1 R	**13990**[1]
1.414	2.250	0.250	CRSHA1 R	**14035**[1]
1.469	2.374	0.375	CRSA1 R	**14641**[1]
1.491	2.191	0.250	CRSA1 R	**14780**
1.500	2.996	0.500	CRSH1 R	**15240**
	3.000	0.375	CRSA1 R	**15241**
1.524	2.374	0.500	CRSH1 R	**15343**
1.563	2.716	0.469	CRSH1 R	**15748**[1]
1.618	2.575	0.500	CRSA1 R	**16404**[1]
1.625	2.437	0.469	CRSHA1 R	**16121**
	2.835	0.469	CRSH1 R	**16386**
	3.062	0.500	CRSH1 R	**16431**[1]
	3.251	0.500	CRSH1 R	**16440**[1]
1.656	2.502	0.500	CRSH1 R	**16532**[1]
1.688	2.374	0.313	CRSA1 R	**16669**
	2.835	0.469	CRSA1 R	**16960**
1.705	3.084	0.500	CRS1 R	**17053**
1.719	2.623	0.500	CRSH1 R	**17136**[1]
1.750	2.328	0.438	CRS1 R	**17257**
	3.154	0.313	CRS1 R	**17726**
	3.937	0.313	CRSA1 R	**17771**[1]
1.781	2.750	0.500	CRSH1 R	**17847**
	2.758	0.500	CRSH1 R	**17851**[1]
1.844	2.502	0.375	CRSA1 R	**18412**[1]
	2.750	0.375	CRSA1 R	**18446**[1]
1.875	3.125	0.313	CRSA1 R	**18879**[1]

[1] Sealant on outside diameter

d_1 **1.889–7.000** in

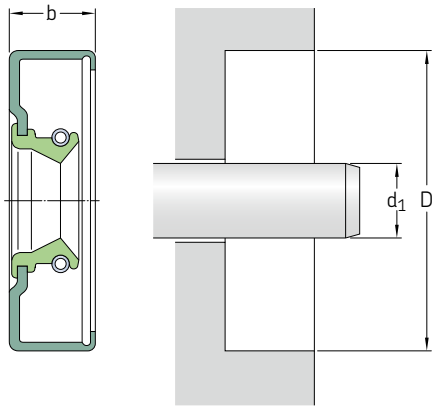

Please see **pages 83** to **86** for housing bore requirements.

Dimensions Shaft d_1	Bore D	Nominal seal width b	**Design and lip material**	**Designation**
in			–	–
1.889	3.110	0.688	CRSA1 P	**18983**
1.890	2.874	0.276	CRSA1 P	**18979**
1.906	3.189	0.313	CRSA1 P	**19062**
1.938	2.762	0.500	CRSA1 R	**19273**[1]
	2.825	0.500	CRSH1 P	**19274**
	3.751	0.500	CRSH1 R	**19466**[1]
1.969	2.638	0.354	CRSA1 R	**19628**
	2.686	0.500	CRSH1 R	**19615**
	2.742	0.500	CRSH1 P	**19620**
	2.875	0.469	CRSH1 R	**19643**
2.008	2.953	0.354	CRSA1 P	**20012**
2.063	2.875	0.375	CRSA1 R	**550085**[1]
2.125	3.623	0.469	CRSA1 P	**21379**
2.145	3.188	0.469	CRSH1 R	**21538**
2.188	3.623	0.500	CRSHA1 R	**21950**
2.432	3.070	0.227	CRSA1 P	**24110**
2.563	3.500	0.500	CRSHA1 P	**25587**
2.648	3.812	0.500	CRS1 R	**26877**
2.750	4.125	0.438	CRS1 P	**27576**[1]
	4.125	0.563	CRSA1 R	**27577**
2.875	3.434	0.294	CRSA1 R	**28646**[1]
2.913	3.543	0.394	CRS1 P	**29105**
3.125	3.936	0.512	CRSA1 V	**31144**[1]
3.250	3.876	0.375	CRSA1 V	**32332**[1]
	4.125	0.563	CRSH1 R	**32362**[1]

Dimensions Shaft d_1	Bore D	Nominal seal width b	**Design and lip material**	**Designation**
in			–	–
3.298	4.125	0.563	CRSA1 R	**32815**[1]
3.469	4.626	0.625	CRSA1 R	**34700**
3.500	5.751	0.563	CRSH1 R	**35111**[1]
3.504	4.173	0.354	CRSA1 V	**35120**
3.813	4.999	0.469	CRSH1 R	**38160**
	5.251	0.469	CRSH1 R	**38220**[1]
3.875	5.501	0.500	CRSHA1 R	**38749**[1]
	5.751	0.563	CRSH1 R	**38810**
3.898	4.680	0.370	CRSA1 VR	**38770**
4.188	4.999	0.469	CRSHA1 R	**41751**
	5.251	0.469	CRSH1 R	**41761**
	5.751	0.500	CRSHA1 R	**41833**
4.313	5.751	0.500	CRSH1 R	**43231**
4.563	5.751	0.500	CRSHA1 R	**45550**
	6.250	0.500	CRSH1 R	**45560**
5.000	7.000	0.500	CRSHA1 R	**50185**
	7.500	0.500	CRSHA1 R	**50195**
5.125	6.500	0.500	CRSHA1 R	**51276**
5.313	6.500	0.500	CRSHA1 R	**53151**
5.375	6.374	0.500	CRSHA1 R	**53688**[1]
	6.499	0.563	CRSH1 R	**53692**
5.500	6.626	0.563	CRSHA1 R	**54949**
	6.876	0.563	CRSHA1 R	**55157**
	7.501	0.563	CRSH1 R	**55179**
5.750	6.876	0.563	CRSHA1 R	**57519**
	7.126	0.563	CRSHA1 R	**57578**
	7.502	0.563	CRSHA1 R	**57584**

[1] Sealant on outside diameter

Dimensions Shaft d_1	Bore D	Nominal seal width b	**Design and lip material**	**Designation**
in			–	–
6.000	7.002	0.500	CRSHA1 R	**60006**[1]
6.062	6.772	0.551	CRSA1 R	**60620**
6.125	7.502	0.563	CRSHA1 R	**61248**[1]
6.188	7.500	0.563	CRSH1 P	**61740**
7.000	8.375	0.625	CRSHA1 R	**70034**

[1] Sealant on outside diameter

PTFE radial shaft seals


SL


SLA


SLX


SLS


YSLE

Main features

Radial shaft seals with one or more PTFE sealing lip(s) are designed to withstand aggressive environments, high temperatures, high pressures and dry running that traditional radial shaft seals made of elastomeric sealing lip materials cannot withstand. Many of the PTFE compounds are FDA approved. Main advantages of PTFE seals include:

- High chemical resistance
- Withstand speeds up to 30 m/s *(5 900 ft/min)*
- Wide operating temperature range, –70 to +250 °C *(–95 to +480 °F)*
- Withstand pressures up to 3,5 MPa *(500 psi)*
- Withstand dry running

Assortment

The profiles shown here are a selection of the most commonly used SKF seal designs with sealing lips made of PTFE. They can be installed in existing housing grooves where traditional radial seals are used, provided that the grooves are manufactured in accordance with international standards.

There are two main executions of PTFE seals: those with a metal case and those without a metal case. The metal case can be made of steel, aluminium or any of the stainless steel materials SS 304, SS 316 and SS 316 TI. The PTFE material should be selected based on the needs of the application.

PTFE seals without a metal case can be designed with an O-ring in the outside diameter groove to provide static sealing ability. Both the PTFE and O-ring material can be selected to meet the demands of different operating conditions, e.g. in the food industry to enable disassembly of the equipment for cleaning.

PTFE materials

The selection of sealing materials typically requires a compromise between advantages and disadvantages. There are hundreds of different PTFE materials with a variety of fillers. Common fillers include glass fibre, carbon, graphite, molybdenum disulphide, metal oxides and various polymers. Each possesses different properties, appropriate for different applications and service conditions. Common to all filled PTFE materials are their improved resistance to wear and deformation.

Unfilled PTFE provides, in most cases, a lower coefficient of friction than a filled PTFE material and the lowest degree of wear of the seal counterface. However, a sealing lip made of an unfilled PTFE material has limited resistance to wear and deformation under load.

The PTFE materials that SKF most often recommends are listed in **table 3** on **page 156**.

In addition to PTFE-based compounds, SKF also offers radial shaft seals in other modified plastics, some of which are listed in **table 4** on **page 157**.

Selecting the appropriate material for the metal case and the O-ring(s) is also of significant importance to achieving satisfactory sealing performance. Contact SKF for more information.


DL

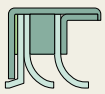
DLA


YNSLE


YSL

Installation

Special care must be taken during handling and installation of PTFE seals. For more information, refer to **pages 96** and **97**.

Size range and availability

The majority of PTFE radial shaft seals from SKF are made to order to meet the demands of each application. There are, however, certain standard sizes within the ranges of approximately 6 to 200 mm *(0.250 to 8 in)* shaft diameter and approximately 16 to 230 mm *(0.630 to 9 in)* bore diameter. Contact SKF for more information regarding designs and sizes.

Table 3

Material family	Description	Shaft hardness recommended [1]
PTFE, unfilled	"Virgin" PTFE. FDA approved. Low-friction material. Used for general non-pressure applications on shafts with low hardness value. Excellent for cryogenics.	A
PTFE + glass	FDA approved. Glass can be in the form of beads or fibres. Glass is exceptionally strong and prolongs the life of the base PTFE. Due to its inherent hardness, it also adds an abrasive property and is not recommended on low-hardness shafts.	C
PTFE + MoS_2	Molybdenum disulphide (MoS_2) adds wear resistance to the base PTFE. Not as abrasive as glass.	C
PTFE + glass + MoS_2	Improved elongation characteristics and less abrasive to running surfaces compared to PTFE + glass.	C
PTFE + carbon	Carbon can be in the form of various grades of fibres or graphite powder, either natural or synthetic. Carbon is an excellent natural lubricant and provides wear resistance to enhance the low-friction base PTFE material. Increased percentage of carbon will increase the wear, creep, and extrusion resistance and improve performance in steam and chemical service at elevated temperatures and pressures.	A, B, C
PTFE + carbon + MoS_2	Excellent wear rate in non-lubricated services at high temperatures.	B, C
PTFE + bronze	Suitable for high-speed dynamic sealing of hydraulic media. Should not be used in chemical service, which could attack the bronze.	
PTFE + bronze + MoS_2	High degree of wear and extrusion resistance in high-pressure applications.	
PTFE + polymer	Polymers, such as polyoxybenzoate, polyimide and many others improve creep and wear resistance.	A, B, C
PTFE + organic pigment	FDA and / or USDA 3A approved.	

[1] Material selection recommendations for counterface hardness ratings (Rockwell C scale) combined with surface speed.
For material selection, please see **table 5** on **page 157**

Table 4

Modified plastic materials

UHMWPE	Ultra-high molecular weight polyethylene. Significantly improved wear and abrasion resistance compared to PTFE-based materials in non-lubricated or abrasive media. FDA and USDA 3A approved. Fair media compatibility, limited to approximately 90 °C *(195 °F)*.
PA	Polamide. Improved strength, limited media compatibility and temperature resistance. Hygroscopic. Used for plain bearings, bushings, back-up rings and some seals.
POM	Polyoxymethylene (a.k.a. polyacetal or just acetal). Similar to nylon but with significantly reduced water-absorption properties. Some grades are FDA and USDA 3A compliant. Typically used for plain bearings, bushings, and back-up rings.
PETP	Polyethylene-therephthalate. Similar to POM but offers improved media compatibility and improved wear resistance.
PEEK	Polyetheretherketone. Similar strength properties as PA and POM but with very good media compatibility and significantly better temperature properties. Some grades are FDA and USDA 3A compliant. Used for plain bearings, bushings, back-up rings and some seals.
PPS	Polyphenylene sulphide. Similar strength properties and chemical compatibility as PEEK-based compounds but offers mproved wear resistance. Has better temperature capabilities than PA or POM materials but not as good as PEEK. Adding fillers can create a “bearing-grade” PPS for high-performance applications.
PI	Polyimide. Exceptional mechanical, thermal and chemical resistance properties.

Table 5

Material selection with shaft hardness + velocity

Surface speed	< 30 HRC	45 HRC	≥ 58 HRC
Low	A or B	A, B, C	A, B, C
Medium	A	A, B	A, B, C
High	A	A, B	A, B

HM and TL seals for grease lubricated applications


HM1


HM3


HM4


HM8

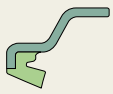
HM11

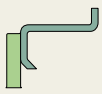
HM12

Main features

SKF offers an extensive assortment of radial shaft seals for less demanding grease lubricated applications operating at moderate speeds. The majority of these seals are designed without a spring. The seals are generally installed with the sealing lip facing outward to provide maximum exclusion ability. Typical applications are grease lubricated agriculture machinery. The illustrations below show the most commonly used designs within this assortment from SKF. Contact SKF for more information on available designs.

See **matrix 1** on **pages 104** and **105** for permissible operating conditions, valid for both HM and TL seals.


HM14


HM18


HM21

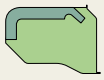
HM102

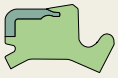
HMA6

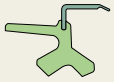
HMA8


HMA10


HMA11


HMA14


HMA21


HMA22


HMA76


HMA85


HMA94


HMA96


TL1

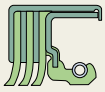
TL4

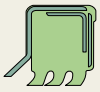
TL5


TL6


TL7

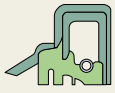
TL8

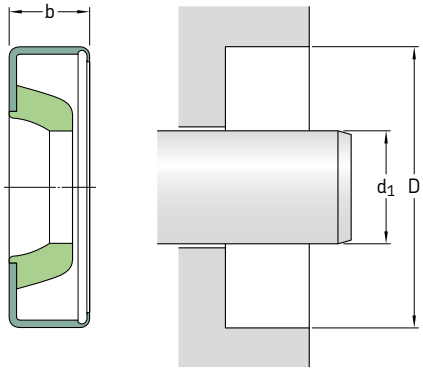

Please see **pages 83** to **86** for housing bore requirements.

Dimensions Shaft d_1	Bore D	Nominal seal width b	Design and lip material	Designation
mm			–	–
6	12	2	HM3 R	**6×12×2 HM3 R**
8	12	3	HM4 R	**8×12×3 HM4 R**
9	13	3	HM4 R	**9×13×3 HM4 R**
10	14	3	HM4 R	**10×14×3 HM4 R**
	16	4	HM102 R	**10×16×4 HM102 R**
12	16	3	HM4 R	**12×16×3 HM4 R**
	18	3	HM4 R	**12×18×3 HM4 R**
	19	3	HM4 R	**12×19×3 HM4 R**
	22	4	HM4 R	**12×22×4 HM4 R**
14	20	3	HM4 R	**14×20×3 HM4 R**
	22	3	HM4 R	**14×22×3 HM4 R**
15	21	3	HM4 R	**15×21×3 HM4 R**
	23	3	HM4 R	**15×23×3 HM4 R**
	25	5	HMA10 R	**15×25×5 HMA10 R**
16	22	3	HM4 R	**16×22×3 HM4 R**
	22	4	HM4 R	**16×22×4 HM4 R**
	24	4	HM102 R	**16×24×4 HM102 R**
17	23	3	HM4 R	**17×23×3 HM4 R**
18	24	3	HM4 R	**18×24×3 HM4 R**
	26	4	HMA1 R	**18×26×4 HMA1 R**
19	27	4	HM4 R	**19×27×4 HM4 R**
20	26	4	HM4 R	**20×26×4 HM4 R**
	28	4	HM4 R	**20×28×4 HM4 R**
22	28	4	HM1 R	**22×28×4 HM1 R**
	28	4	HMA10 R	**22×28×4 HM10 R**
	30	4	HM4 R	**22×30×4 HM4 R**
	35	5	HM14 R	**22×35×5 HM14 R**
23	32	5,50	HM1 R	**23×32×6 HM1 R**
	35	6	HMA10 R	**23×35×6 HMA10 R**
24	32	4	HM4 R	**24×32×4 HM4 R**
25	32	4	HM4 R	**25×32×4 HM4 R**
	33	4	HM4 R	**25×33×4 HM4 R**
	35	4	HM4 R	**25×35×4 HM4 R**
26	34	4	HM4 R	**26×34×4 HM4 R**
28	35	4	HM4 R	**28×35×4 HM4 R**
	35	6	HM102 R	**28×35×6 HM102 R**
	37	4	HM4 R	**28×37×4 HM4 R**
30	37	4	HM4 R	**30×37×4 HM4 R**
	40	4	HM4 R	**30×40×4 HM4 R**
32	42	4	HM4 R	**32×42×4 HM4 R**
35	42	4	HM4 R	**35×42×4 HM4 R**
	45	4	HM4 R	**35×45×4 HM4 R**
	47	5	HM4 R	**35×47×5 HM4 R**
37	47	4	HM4 R	**37×47×4 HM4 R**
38	48	4	HM4 R	**38×48×4 HM4 R**
40	47	4	HM4 R	**40×47×4 HM4 R**
	50	4	HM4 R	**40×50×4 HM4 R**
	52	5	HM4 R	**40×52×5 HM4 R**
	53	5	HMA76 R	**40×53×5 HMA76 R**
	62	10	HMA10 R	**40×62×10 HMA10 R**
42	52	4	HM4 R	**42×52×4 HM4 R**
	55	6	HM1 R	**42×55×6 HM1 R**
	64	6	HMA1 R	**42×64×6 HMA1 R**
45	52	4	HM4 R	**45×52×4 HM4 R**
	55	4	HM4 R	**45×55×4 HM4 R**
	72	8	HMA22 R	**45×72×8 HMA22 R**
47	72	6	HMA85 R	**47×72×6 HMA85 R**
48	58	4	HM4 R	**48×58×4 HM4 R**
50	60	6	HMA10 R	**50×60×6 HMA10 R**
	62	5	HM4 R	**50×62×5 HM4 R**
62	78	7	HMA8 R	**62×78×7 HMA8 R**
65	75	8	HM102 R	**65×75×8 HM102 R**

[1] Without SKF Bore Tite Coating

d_1 **0.188–1.375** in

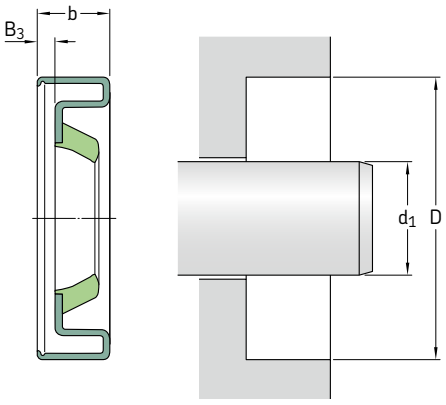

Please see **pages 83** to **86** for housing bore requirements.

Dimensions Shaft d_1	Bore D	Nominal seal width b	Clearance B_3	Design and lip material	Designation
in				–	–
0.188	0.500	0.125		HM1 R	**1850**
0.250	0.499	0.188		HM14 R	**2450**
	0.499	0.188		HMA14 V	**2452**
	0.562	0.188		HM14 R	**2470**[1]
	0.626	0.250		HM14 R	**2490**
	0.749	0.188		HM14 R	**2560**
0.313	0.500	0.125		HM4 R	**3044**
	0.626	0.156		HM14 R	**3060**[1]
	0.626	0.156		HM14 V	**3061**
	0.626	0.203		HM1 R	**3050**[1]
	0.633	0.141		HM14 R	**3080**
	0.749	0.250		HM14 R	**3140**
	0.750	0.250		HM3 R	**3141**
	0.862	0.250		HM14 R	**3086**
0.375	0.562	0.093		HM3 V	**535835**
	0.563	0.094		HM3 R	**3621**
	0.628	0.197		HMA10 P	**3632**
	0.687	0.156		HM14 R	**3645**[1]
	0.749	0.250		HM14 R	**3683**
	0.875	0.250		HM14 R	**3727**
0.404	0.620	0.188		HM14 R	**4010**
	0.862	0.250		HM14 R	**4012**
0.438	0.836	0.188		HM14 R	**4231**
	0.879	0.180		HM8 R	**4256**
	0.999	0.250		HM14 R	**4340**
0.469	0.836	0.188		HM14 P	**4623**
	0.875	0.219		HM14 R	**4628**
0.500	0.687	0.093		HM3 V	**538545**
	0.688	0.094		HM3 R	**4911**
	0.750	0.125		HM14 R	**4912**[1]
0.500	0.820	0.156		HM14 R	**4914**[1]
	0.843	0.250		HM14 R	**4923**[1]
	0.875	0.125		HM14 R	**4925**
	0.875	0.250		HM14 R	**4938**

Dimensions Shaft d_1	Bore D	Nominal seal width b	Clearance B_3	Design and lip material	Designation
in				–	–
0.500 cont.	0.999	0.188		HM14 R	**4950**[1]
	0.999	0.250		HM14 R	**4990**[1]
	1.124	0.250		HM14 R	**5085**[1]
0.551	1.124	0.203		HM21 R	**5399**[1]
0.563	0.750	0.094		HM3 R	**5500**
	0.875	0.188		HM14 R	**5522**[1]
	0.999	0.219		HM14 R	**5569**[1]
	1.124	0.250		HM14 R	**5685**
0.594	1.124	0.250		HM14 R	**5946**[1]
0.624	1.131	0.188		HM14 R	**6243**[1]
0.625	0.812	0.094		HM3 R	**6105**
	0.813	0.094		HM3 V	**6106**
	0.933	0.188		HM14 R	**6125**[1]
	0.933	0.188		HM14 V	**6126**[1]
	0.937	0.188		HM14 R	**6130**[1]
	1.000	0.125		HM14 P	**6152**[1]
	1.000	0.125		HM14 R	**6153**
	1.063	0.250		HM14 R	**6158**[1]
	1.124	0.250		HM14 R	**6225**[1]
	1.250	0.250		HM14 R	**6323**[1]
	1.259	0.250		HM14 R	**6335**[1]
	1.375	0.250		HM14 R	**6370**[1]
0.669	1.250	0.250		HM14 R	**6806**[1]
0.688	0.999	0.188		HM14 R	**6720**[1]
	1.124	0.250		HM14 R	**6759**[1]
	1.187	0.125		HM14 R	**6762**[1]
	1.375	0.125		HM14 R	**6915**[1]
	1.375	0.250		HM14 R	**6920**[1]
0.750	0.999	0.125		HM14 R	**7410**
	1.000	0.125		HM14 D	**7408**[1]
	1.000	0.125		HM3 V	**535909**
	1.004	0.156		HM8 R	**7409**
	1.006	0.125		HM14 R	**7411**[1]

[1] SKF Bore Tite Coating

Dimensions Shaft d_1	Bore D	Nominal seal width b	Clearance B_3	Design and lip material	Designation
in				–	–
0.750 cont.	1.031	0.313		HMA6 R	**7412**
	1.062	0.188		HM14 R	**7413**
	1.124	0.156		HM14 R	**7415**[1]
	1.187	0.156		HM14 R	**7421**
	1.249	0.250		HM14 R	**530716**[2]
	1.250	0.250		HM14 R	**7464**[1]
	1.259	0.250		HM14 R	**7477**[1]
	1.375	0.250		HM14 R	**7536**
	1.375	0.250		HM14 P	**7537**
	1.437	0.250		HM14 R	**7550**[1]
	1.499	0.250		HM14 R	**7571**[1]
0.781	1.375	0.197		HM14 R	**7831**[1]
0.813	1.063	0.125		HM3 R	**8009**
0.875	1.125	0.125		HM14 R	**8620**
	1.125	0.125		HM14 V	**8619**[1]
	1.246	0.188		HM14 R	**8625**[1]
	1.251	0.188		HM14 R	**8627**
	1.251	0.188		HM3 R	**8631**[2]
	1.255	0.188		HM14 R	**8632**[1]
	1.308	0.250		HM14 R	**8637**[1]
	1.312	0.250		HM14 R	**8645**[1]
	1.375	0.188		HM14 R	**8677**[1]
	1.437	0.250		HM14 R	**8690**[1]
	1.499	0.250		HM21 R	**8741**[1]
	1.562	0.250		HM14 R	**8761**
	1.575	0.250		HM14 R	**8772**
	1.624	0.188		HM8 R	**8802**
0.938	1.375	0.250		HM14 R	**9243**[1]
	1.499	0.250		HM14 R	**9298**[1]
	1.734	0.250		HM14 R	**9354**[1]
1.000	1.250	0.125		HM14 R	**9815**[1]
	1.312	0.125		HM14 R	**9818**[1]
	1.375	0.188		HM14 R	**9820**[1]
	1.437	0.250		HM14 R	**9835**[1]
	1.499	0.188		HM14 R	**9859**[1]
	1.510	0.219		HM21 R	**9853**[1]
	1.561	0.250		HM14 R	**9900**[1]
	1.575	0.250		HM14 R	**9903**[1]
	1.624	0.250		HM14 R	**9932**[1]
1.000	1.752	0.250		HM21 R	**9995**[1]
	1.781	0.250		HM21 R	**530484**
	1.781	0.469		HM14 R	**10034**[1]
	1.781	0.469	0.265	HM18 R	**10035**[1]
	1.851	0.250		HM14 R	**10074**[1]
	1.938	0.250		HM14 R	**10112**[1]
	2.000	0.250		HM21 R	**10152**[1]
	2.250	0.250		HM14 R	**10185**[1]
1.125	1.375	0.125		HM14 R	**11050**
	1.375	0.125		HM14 V	**11052**[1]

Dimensions Shaft d_1	Bore D	Nominal seal width b	Clearance B_3	Design and lip material	Designation
in				–	–
1.125 cont.	1.438	0.203		HM14 R	**11055**[1]
	1.499	0.188		HM14 R	**11060**[1]
	1.562	0.188		HM8 R	**11065**
	1.562	0.250		HM14 R	**11081**
	1.624	0.250		HM21 R	**11130**[1]
	1.750	0.250		HM14 R	**11150**[1]
	1.781	0.250		HM21 R	**11161**[1]
	1.781	0.469	0.265	HM18 R	**11164**
	1.828	0.250		HM21 R	**11191**
	1.938	0.343	0.352	HM14 R	**11269**
	2.000	0.250		HM21 R	**11334**[1]
	2.047	0.250		HM21 R	**11352**[1]
1.188	2.000	0.250		HM1 R	**11836**
1.190	1.996	0.250		HM1 R	**11846**[1]
1.250	1.500	0.125		HM14 R	**12330**[1]
	1.624	0.250		HM14 R	**12325**[1]
	1.625	0.188		HM14 R	**11096**
	1.686	0.188		HM14 R	**12334**[1]
	1.752	0.188		HM21 R	**12361**[1]
	1.752	0.250		HM21 R	**12369**
	1.828	0.188		HM8 R	**12375**
	1.874	0.250		HM21 R	**12379**[1]
	1.968	0.438		HM14 R	**12398**[1]
	1.968	0.469	0.254	HM18 R	**12399**[1]
	1.979	0.250		HM21 R	**12407**[1]
	1.979	0.406	0.200	HM18 R	**12411**
	1.980	0.406		HMA22 R	**12506**[1]
	1.983	0.250		HM21 R	**12437**
	2.000	0.250		HM21 R	**12481**[1]
	2.062	0.250		HM21 R	**12508**[1]
	2.125	0.250		HM21 R	**12565**[1]
	2.250	0.250		HM14 R	**12582**[1]
	2.328	0.500	0.286	HM18 R	**12611**[1]
1.375	1.750	0.197		HM14 R	**13529**
	1.750	0.197		HM14 V	**13509**[1]
1.375	1.834	0.188		HM8 R	**13533**[1]
	1.874	0.188		HM14 R	**13543**
	1.874	0.250		HM14 R	**13548**[1]
	1.874	0.250		HM14 P	**13545**[1]
	1.938	0.250		HM14 R	**13556**[1]
	2.000	0.250		HM21 R	**13573**[1]
	2.106	0.250		HM21 R	**13612**[1]
	2.125	0.250		HM21 R	**13662**[1]
	2.250	0.250		HM14 R	**13689**[1]
	2.282	0.250		HM14 R	**13710**[1]
	2.328	0.406	0.188	HM18 R	**13711**
	2.374	0.250		HM21 R	**13758**[1]
	2.437	0.250		HM21 R	**13796**[1]
	2.502	0.250		HM21 R	**13862**[1]
	2.835	0.594		TL8 R	**13916**[1]

[1] SKF Bore Tite Coating
[2] Stainless steel case

d_1 **1.438–3.500** in

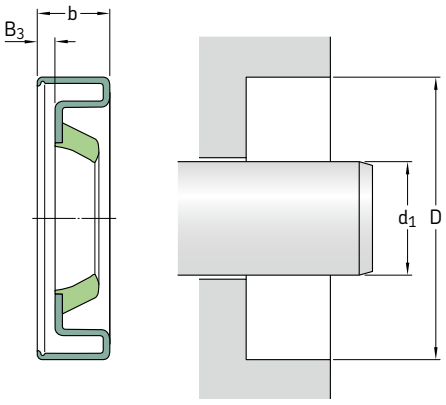

Please see **pages 83** to **86** for housing bore requirements.

Dimensions Shaft d_1	Bore D	Nominal seal width b	Clearance B_3	Design and lip material	Designation
in				–	–
1.438	2.000	0.125		HM4 R	**14209**
	2.250	0.250		HM14 R	**14257**[1]
	2.437	0.250		HM21 R	**14359**[1]
	2.437	0.250		HM21 V	**564365**[1]
1.457	2.047	0.328		HMA11 R	**14600**[3]
1.473	1.971	0.563		HMA10 R	**14631**
1.500	1.874	0.188		HM14 R	**14804**
	1.874	0.188		HM14 V	**14808**[1]
	1.874	0.250		HM14 R	**14810**[1]
	1.938	0.250		HM14 R	**14816**[1]
	1.983	0.188		HM14 R	**14840**
	1.989	0.250		HMA22 R	**14848**[1]
1.500	2.000	0.188		HM8 R	**14869**
	2.000	0.250		HM14 R	**14857**[1]
	2.250	0.250		HM21 R	**14960**
	2.254	0.250		HM21 R	**14966**[1]
	2.328	0.390	0.188	HM18 R	**14975**
	2.328	0.500	0.286	HM18 R	**14974**
	2.374	0.250		HM21 R	**15032**[1]
	2.437	0.250		HM14 R	**15080**[1]
	2.502	0.250		HM21 R	**15160**[1]
	2.623	0.250		HM21 R	**15190**
	2.716	0.250		HM21 R	**15209**[1]
1.563	2.250	0.250		HM14 R	**15532**[1]
	2.374	0.250		HM21 R	**15544**[1]
	2.502	0.250		HM21 R	**15649**[1]
	2.687	0.250		HM21 R	**15719**[1]
1.609	1.906	0.250		HM3 R	**16430**[2]
1.625	2.125	0.250		HM14 R	**16055**[1]
	2.250	0.250		HM21 R	**16065**[1]

Dimensions Shaft d_1	Bore D	Nominal seal width b	Clearance B_3	Design and lip material	Designation
in				–	–
1.625 cont.	2.328	0.438	0.235	HM18 R	**16069**[1]
	2.328	0.438		TL7 R	**16064**
	2.374	0.250		HM21 R	**16092**[1]
	2.375	0.250		HM14 R	**16095**
	2.437	0.250		HM21 R	**16168**[1]
	2.502	0.250		HM21 R	**16270**[1]
	2.562	0.250		HM21 R	**16285**[1]
	2.562	0.438	0.210	HM18 R	**16289**[1]
	2.623	0.250		HM21 R	**16322**[1]
	2.750	0.250		HM21 R	**16362**[1]
	2.781	0.313		HM14 R	**16384**[1]
1.660	2.440	0.594		HM11 R	**16520**
1.688	2.328	0.500	0.286	HM18 R	**16667**
	2.502	0.281		HM21 R	**16743**[1]
	2.562	0.250		HM21 R	**16754**[1]
1.750	2.250	0.188		HM14 R	**17240**[1]
	2.374	0.250		HM21 R	**17277**
	2.437	0.250		HM21 R	**17310**
	2.441	0.250		HM21 R	**17340**[1]
	2.441	0.250		HM21 R	**17341**[1][2]
	2.441	0.469	0.254	HM18 R	**17359**[1]
	2.502	0.250		HM21 R	**17392**[1]
	2.561	0.250		HM21 R	**17415**[1]
	2.562	0.500	0.286	HM18 R	**17406**[1]
	2.623	0.250		HM21 R	**17461**
	2.716	0.250		HM21 R	**17488**[1]
	2.718	0.359	0.160	HM18 R	**17617**[1]
	2.718	0.359		TL7 R	**17618**
	2.750	0.250		HM21 R	**17544**[1]
	2.830	0.375		HM21 R	**17633**[1]
	2.875	0.250		HM21 R	**17671**[1]
	2.875	0.500		TL7 R	**17674**
1.750	3.000	0.250		HM21 R	**17702**[1]
	3.149	0.290		TL6 R	**17724**

[1] SKF Bore Tite Coating
[2] Stainless steel case
[3] Press-fit width 0.288 in, axial auxiliary lip

Dimensions Shaft d_1	Bore D	Nominal seal width b	Clearance B_3	Design and lip material	Designation
in				–	–
1.781	2.126	0.250		HM14 R	**17802**[2]
1.811	2.697	0.295		HMA8 R	**17955**
1.813	2.562	0.438	0.224	HM18 R	**18050**[1]
	2.719	0.270		TL7 R	**18127**
	2.965	0.250		HM1 R	**18258**
1.875	2.502	0.250		HM21 R	**18558**[1]
	2.623	0.250		HM21 R	**18591**[1]
	2.750	0.250		HM21 R	**18659**[1]
	2.780	0.250		HM21 R	**18704**[1]
	2.875	0.250		HM21 R	**18750**[1]
	2.997	0.250		HM14 R	**18808**[1]
	3.000	0.250		HM21 R	**18823**[1]
	3.150	0.250		HM21 R	**18889**[1]
1.938	2.502	0.281		HM14 R	**19219**[1]
	2.875	0.250		HM21 R	**19306**[1]
	2.686	0.594		TL8 R	**19251**[1]
1.945	2.892	0.294		TL6 R	**19510**[1]
1.970	2.362	0.158		HM14 D	**532627**
2.000	2.371	0.250		HM14 R	**19737**[1]
	2.375	0.188		HM14 R	**19733**
	2.500	0.250		HM1 R	**19748**
	2.502	0.250		HM14 R	**19754**[1]
2.000	2.623	0.250		HM21 R	**19763**[1]
	2.623	0.250		HM21 V	**19746**[1]
	2.631	0.272		HMA94 R	**20016**[3]
	2.635	0.234		HM14 R	**19770**[1]
	2.686	0.250		HM21 R	**19783**[1]
	2.750	0.250		HM21 R	**19834**[1]
	2.752	0.188		HM14 R	**19820**[1]
	2.875	0.250		HM21 R	**19880**[1]
	2.965	0.313		HM14 R	**19940**[1]
	2.965	0.500	0.275	HM14 R	**19938**[1]
	2.997	0.250		HM21 R	**19965**
	3.000	0.250		HM21 R	**20006**[1]
	3.061	0.250		HM21 R	**20044**[1]
	3.148	0.250		HM14 R	**20078**
	3.623	0.250		HM21 R	**20148**
2.063	3.149	0.500		TL6 D	**20672**[1][4]
	3.150	0.266		TL7 R	**20674**
2.094	2.718	0.359	0.160	HM18 R	**20952**[1]
	2.750	0.250		HM21 R	**20920**[1]
2.125	2.750	0.250		HM21 R	**21059**[1]
	2.875	0.250		HM14 R	**21101**[1]
	2.891	0.250		HM14 R	**21121**[1]
	3.000	0.250		HM21 R	**21159**[1]
	3.061	0.250		HM21 R	**21208**[1]
	3.189	0.250		HM21 R	**21265**[1]
2.240	3.189	0.610		HM14 R	**22614**[1]

Dimensions Shaft d_1	Bore D	Nominal seal width b	Clearance B_3	Design and lip material	Designation
in				–	–
2.250	2.625	0.188		HM14 R	**22306**[1]
	2.875	0.250		HM21 R	**22325**
	3.000	0.250		HM21 R	**22368**[1]
	3.061	0.250		HM21 R	**22392**
	3.125	0.563	0.214	HM18 R	**22411**
	3.251	0.250		HM21 R	**22468**
	3.440	0.250		HM14 R	**22565**[1]
2.297	3.148	0.359	0.185	HM18 R	**22870**
2.313	3.000	0.250		HM14 R	**23035**[1]
	3.065	0.281		HM1 R	**23098**
	3.500	0.250		HM21 R	**23240**[1]
2.375	2.997	0.250		HM21 R	**23630**[1]
	3.000	0.250		HM21 R	**23640**
	3.350	0.250		HM21 R	**23725**[1]
	3.543	0.250		HM21 R	**23815**[1]
2.500	3.000	0.313		HM1 R	**24865**
	3.000	0.250		HM14 R	**24863**[1]
	3.125	0.250		HM21 R	**24875**[1]
	3.150	0.250		HM21 R	**24880**[1]
	3.251	0.250		HM21 R	**24904**[1]
	3.500	0.250		HM21 R	**25007**[1]
2.625	3.371	0.250		HM14 R	**26144**[1]
	3.623	0.250		HM21 R	**26260**[1]
	3.751	0.715		TL4 RR	**26289**[4]
	3.813	0.415		TL5 R	**26310**[5]
2.750	3.125	0.188		HM1 R	**27210**
	3.250	0.313		HM1 R	**27225**
	3.500	0.250		HM14 R	**27271**[1]
	3.500	0.250		HM14 V	**546751**[1]
	3.751	0.250		HM21 R	**27394**[1]
2.875	3.751	0.250		HM21 R	**28700**[1]
	3.876	0.188		HM1 R	**28725**[1]
	3.876	0.250		HM21 R	**28751**[1]
	4.003	0.250		HM21 R	**28800**[1]
2.953	4.724	0.320		TL1 R	**29852**[1]
3.000	3.500	0.313		HM1 R	**29840**
	3.623	0.250		HM14 R	**29850**
	3.751	0.250		HM21 R	**29863**[1]
	4.000	0.250		HM21 V	**539075**
	4.003	0.250		HM21 R	**29968**
	4.249	0.250		HM21 R	**30049**[1]
3.125	3.751	0.250		HMA1 R	**31129**[1]
	4.125	0.250		HMA1 R	**31192**
3.250	3.750	0.250		HMA1 R	**32325**[1]
	4.249	0.250		HM14 R	**32412**[1]
	4.501	0.250		HM21 R	**32510**[1]
3.500	4.000	0.300		HM1 R	**34835**
	4.003	0.250		HM14 R	**34840**[1]
	4.125	0.250		HM14 R	**34848**
	4.125	0.250		HM14 V	**546770**[1]

[1] SKF Bore Tite Coating
[2] Stainless steel case
[3] Press-fit width 0.257 in
[4] Press-fit width 0.395 in
[4] Press-fit width 0.640 in
[5] Press-fit width 0.300 in

d_1 **3.500–9.500** in

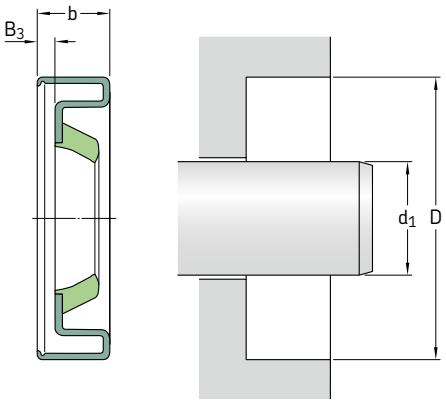

Please see **pages 83** to **86** for housing bore requirements.

Dimensions Shaft d_1	Bore D	Nominal seal width b	Clearance B_3	**Design and lip material**	**Designation**
in				–	–
3.500 cont.	4.450	0.531		HM12 R	**34885**
	4.501	0.250		HM21 R	**34967**
	4.751	0.250		HM21 R	**35042**[1]
3.750	4.376	0.250		HM14 R	**37320**[1]
	4.376	0.250		HM14 V	**37325**[1]
4.000	4.501	0.250		HM14 R	**39835**[1]
	4.501	0.250		HM14 V	**546387**[1]
	4.876	0.250		HM21 R	**39860**[1]
	4.999	0.250		HM21 R	**39961**[1]
4.250	4.813	0.313		HM14 R	**42340**
	5.126	0.250		HM21 R	**42380**[1]
	5.251	0.250		HM21 R	**42470**[1]
4.500	5.501	0.250		HM14 R	**45025**
4.750	5.375	0.313		HM14 R	**47378**[1]
4.875	5.501	0.250		HM14 R	**48650**
5.000	6.250	0.250		HM21 R	**50070**[1]
5.250	6.250	0.250		HM4 R	**52475**
5.750	6.375	0.250		HMA1 R	**57502**
	7.003	0.250		HMA21 R	**57571**
6.000	7.500	0.250		HM4 R	**60075**
6.374	8.749	0.421		HMA96 R	**181948**
7.938	8.750	0.344		HM14 R	**79302**
9.500	10.750	0.313		HM21 R	**95052**

[1] SKF Bore Tite Coating

X seals, sealing against housing bore


X1


X2


X4


X12


X13


X14


X15


XH15

Main features

SKF offers an assortment of radial shaft seals that have a press fit on the shaft and with sealing lip(s) that contact the housing bore. For a proper press fit, the requirements specified for housing bores on **pages 83** to **86** should be adhered to for the shaft. Shaft requirements specified on **pages 80** to **82** apply for the housing bore when using X seals. These seals are generally installed with the sealing lip(s) facing outward to provide optimum exclusion. Main applications are greased lubricated agriculture machinery. The selection to the right shows the most commonly used SKF designs. Contact SKF for more information on available designs.

See **matrix 1** on **pages 104** and **105** for general permissible operating conditions.

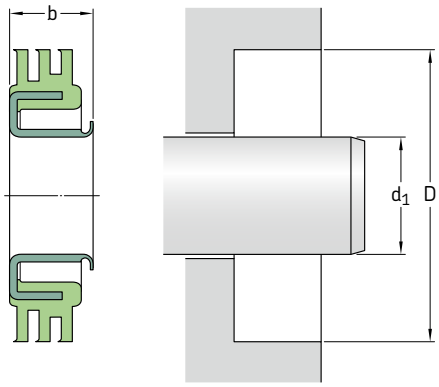

For proper press fit on shaft, refer to housing bore tolerances specified on **pages 83** to **86**.

Dimensions Shaft d_1	Bore D	Nominal seal width b	**Design and lip material**	**Designation**
mm			–	**–**
25,40	59,84	6,86	X15 R	**538266**
38,10	55,55	12,70	X1 L	**14896**
	58,06	6,86	X15 R	**14970**
	58,06	10,67	XH15 R	**14971**
	62,53	7,37	X13 R	**15174**
39,70	56,82	7,37	X4 R	**15530**
	64,29	7,24	X15 R	**15660**
	69,85	11,13	X R	**15702**
41,28	62,53	6,35	X15 R	**16286**
42,88	67,31	7,37	X4 R	**16818**
44,45	69,04	7,47	X4 R	**17485**
	70,76	7,47	X15 R	**17620**
46,05	61,16	7,62	X15 R	**18030**
47,57	68,99	7,14	X13 R	**18630**
50,57	73,66	7,37	X4 R	**19720**
50,80	71,17	6,35	X15 D	**19844**
	73,03	6,50	XHM R	**19882**
53,98	82,55	6,86	X15 R	**21298**
57,15	86,36	7,47	X15 R	**22563**
63,40	93,27	7,95	X15 R	**25078**
76,20	101,60	12,70	X2 L	**29900**
	114,94	9,53	X12 R	**30108**

Dimensions Shaft d_1	Bore D	Nominal seal width b	**Design and lip material**	**Designation**
mm			–	**–**
80,00	101,45	15,00	X15 R	**31514**
82,55	113,49	8,00	X4 R	**32437**
	114,30	7,95	X15 R	**32441**
86,36	114,30	7,14	X14 V	**340001)**
92,08	114,30	7,47	X15 R	**36172**
98,43	136,91	9,53	X12 R	**38590**
101,60	147,65	12,70	X R	**40131**
111,13	136,47	14,48	X1 P	**44269**
114,30	152,78	13,97	X12 R	**44892**
	162,79	10,54	X12 D	**45161**
120,65	152,45	7,62	X15 R	**47455**
139,70	172,21	9,65	X R	**55152**
158,75	196,85	8,89	X R	**62530**

[1] SKF Bore Tite Coating on inside diameter

d_1 **1.000–6.250** mm

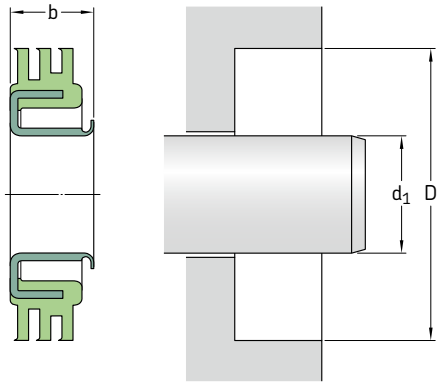

For proper press fit on shaft, refer to housing bore tolerances specified on **pages 83** to **86**.

Dimensions Shaft d_1	Bore D	Nominal seal width b	**Design and lip material**	**Designation**
in			–	**–**
1.000	2.356	0.270	X15 R	**538266**
1.500	2.187	0.500	X1 L	**14896**
	2.286	0.270	X15 R	**14970**
	2.286	0.420	XH15 R	**14971**
	2.462	0.290	X13 R	**15174**
1.563	2.237	0.290	X4 R	**15530**
	2.531	0.285	X15 R	**15660**
	2.684	0.438	X R	**15702**
1.625	2.462	0.250	X15 R	**16286**
1.688	2.650	0.290	X4 R	**16818**
1.750	2.718	0.294	X4 R	**17485**
	2.786	0.294	X15 R	**17620**
1.813	2.408	0.300	X15 R	**18030**
1.873	2.716	0.281	X13 R	**18630**
1.991	2.900	0.290	X4 R	**19720**
2.000	2.802	0.250	X15 D	**19844**
	2.875	0.256	XHM R	**19882**
2.125	3.250	0.270	X15 R	**21298**
2.250	3.400	0.294	X15 R	**22563**
2.496	3.672	0.313	X15 R	**25078**

Dimensions Shaft d_1	Bore D	Nominal seal width b	**Design and lip material**	**Designation**
in			–	**–**
3.000	4.000	0.500	X2 L	**29900**
	4.525	0.375	X12 R	**30108**
3.150	3.994	0.591	X15 R	**31514**
3.250	4.468	0.315	X4 R	**32437**
	4.500	0.313	X15 R	**32441**
3.400	4.500	0.281	X14 V	**340001)**
3.625	4.500	0.294	X15 R	**36172**
3.875	5.390	0.375	X12 R	**38590**
4.000	5.813	0.500	X R	**40131**
4.375	5.373	0.570	X1 P	**44269**
4.500	6.015	0.550	X12 R	**44892**
	6.409	0.415	X12 D	**45161**
4.750	6.002	0.300	X15 R	**47455**
5.500	6.780	0.380	X R	**55152**
6.250	7.750	0.350	X R	**62530**

1) SKF Bore Tite Coating on inside diameter

Machined seals


R01-AF2


R01-AS


R01-P


R01-R


R02-P


R02-R


R08-R


R08-P


R01-F


R11-F


R19-FX

The seals for industrial applications listed in this catalogue represent the preferred standard seals in common sizes. SKF supplies many additional sizes and designs developed for a great variety of customer applications. The machined seals profiles shown here are also tested and evaluated according to these application requirements. For additional information about these profiles, or if the application requires a solution outside of what is provided in this catalogue, contact SKF. SKF can provide customized sealing solutions for the toughest application conditions.

SNL types


TX


TY


TZ

Sealproduction – SKF machine seals

A.2 Seals for heavy industrial applications

2
DAYS EXPRESS SERVICE

Seals for heavy industrial applications

- Flexible in sizes
- Configured to the application
- Express service available

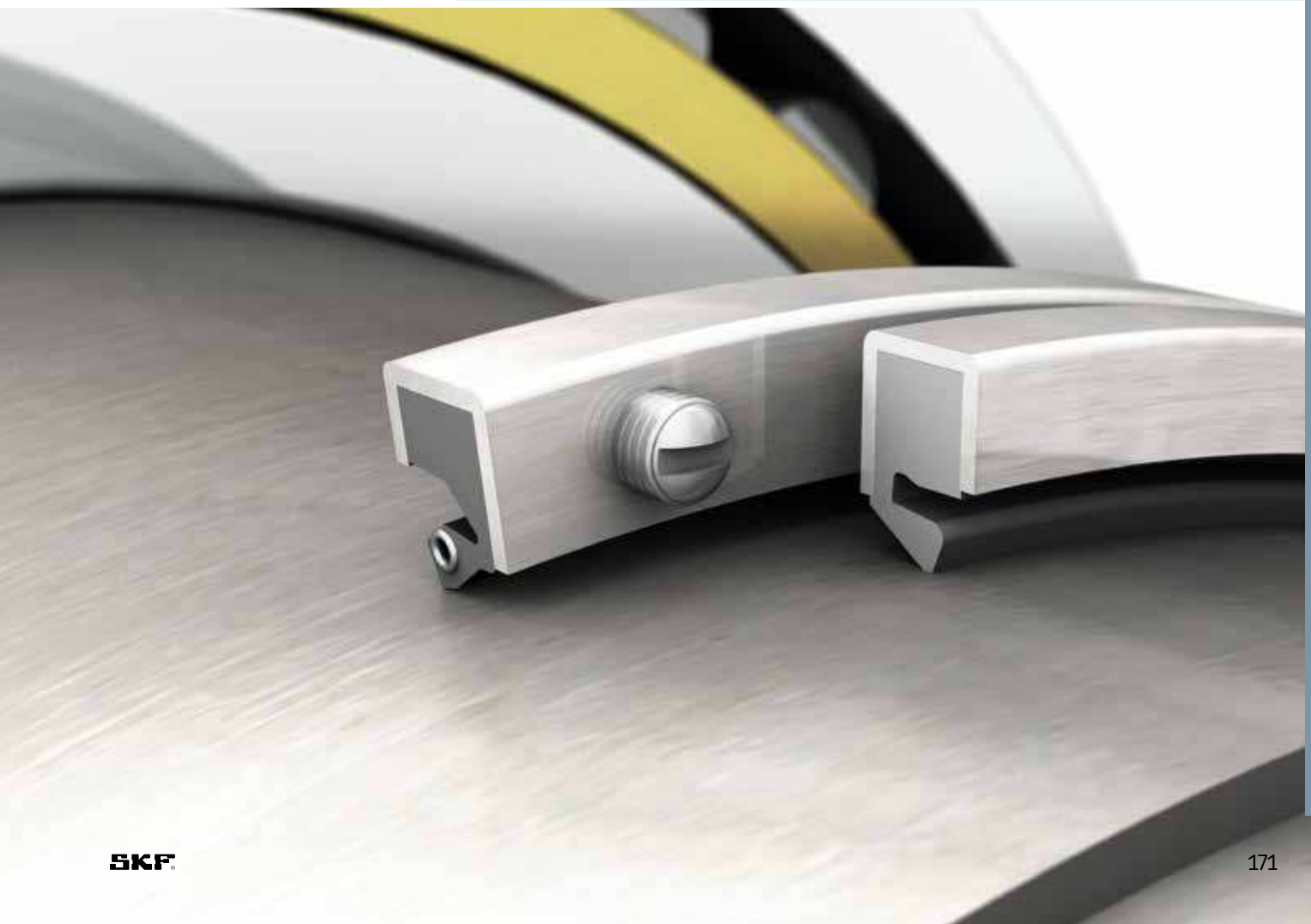

Seals for heavy industrial applications – general

Heavy duty industrial applications, such as construction equipment, metal, mining, paper, oil drilling or wind turbines can be very challenging for radial shaft seals. In operation, the seals are exposed to a wide range of temperatures, speeds and abrasive contaminants. Seals for these applications feature generally strudy designs and often large size and come with some special features to help improve sealing performance, reliability and handling.

The Heavy Industrial Seals (HIS) range is specially developed by SKF to protect large size bearings under the tough operating conditions experienced in heavy industrial applications.

The heavy industrial seals offering includes metal cased seals (HDS), all-rubber seals (HS), reinforced all-rubber seals (HSS) and polyurethane seals (HRS). SKF's flexible manufacturing processes of the seals enables a wide range of dimensions to be manufactured, with no extra tooling or machine setup time and costs or delays to maintenance timelines. In addition, this SKF service has no minimum order quantity, so is ideal for both large and small industrial application requirements.

Features

SKF Heavy Industrial seals are

- made to order in an unlimited range of customized sizes to suit existing machine dimensions,
- available in a wide range of design and material options to suit application requirements,
- produced quickly to suit any customer lead time – including standard, express or urgent delivery options and
- quick and easy to install, the seals reduce risk of failure and resultant downtime.

Typical applications

- Steel and aluminium rolling
- Pulp and paper feeders and paper machine wet section
- Mining and cement machinery
- Traditional energy – coal grinding mills
- Wind turbines
- Tunnel boring machines
- Heavy duty gearboxes
- Special purpose machinery
- Construction machinery

See also **matrix 2** on **pages 176** to **183**.

Express service with flexible manufacturing processes
Catalogue shaft seals flexible in size are available in customized main dimensions with minimum order quantity of just one seal and optional express service.

Classification

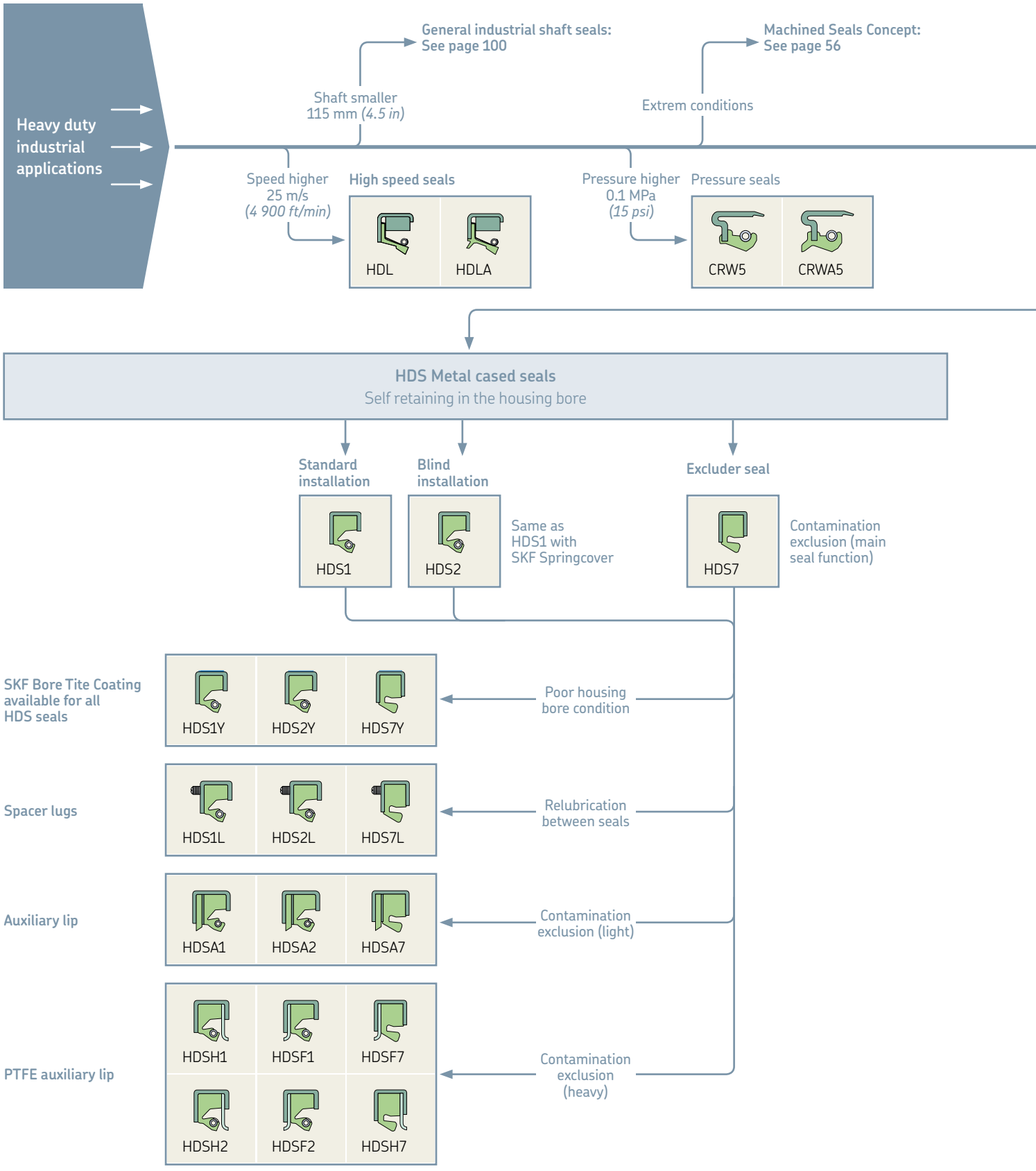

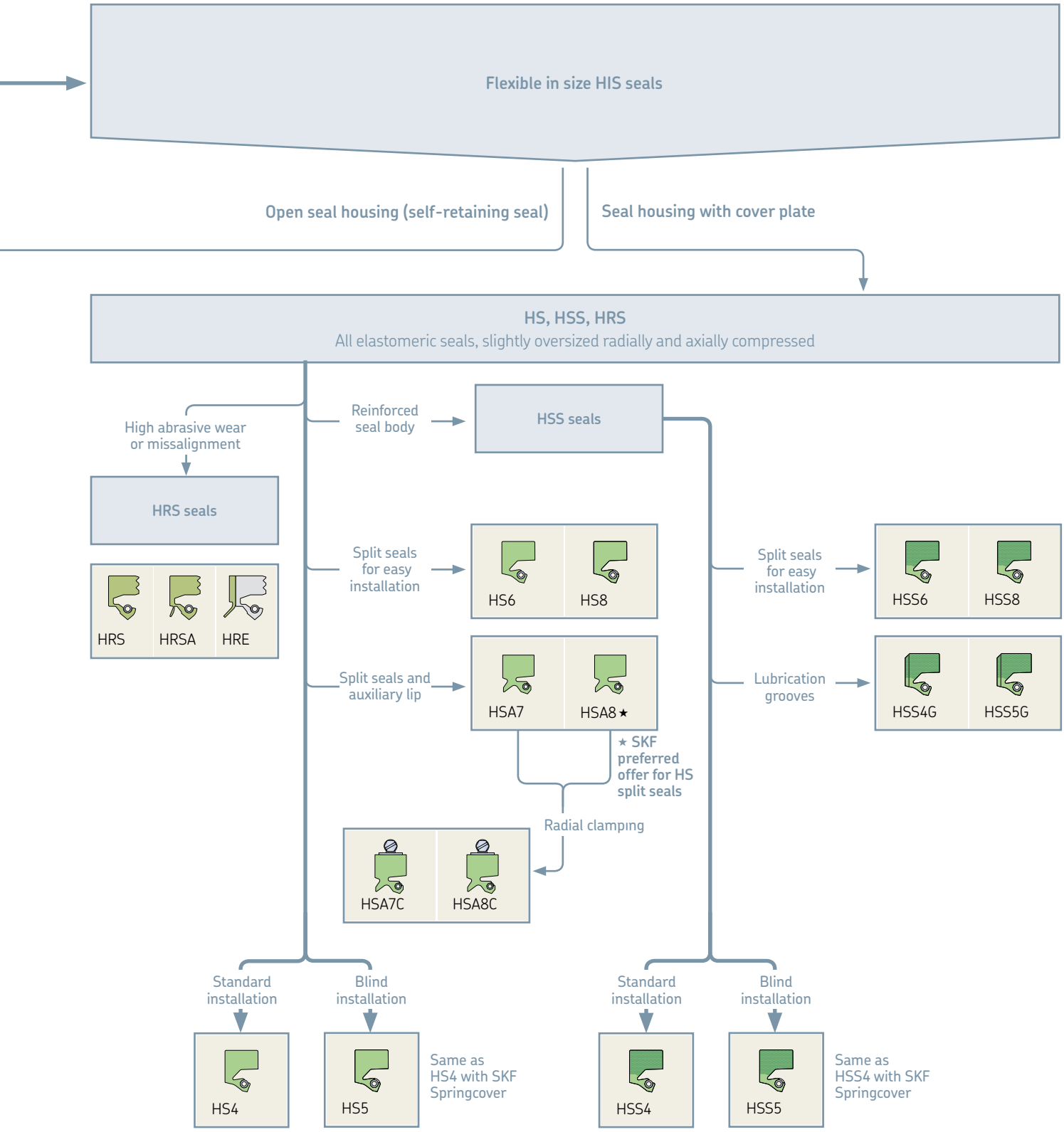
Flexible in size HIS seals
Open seal housing (self-retaining seal)
Seal housing with cover plate
HS, HSS, HRS
All elastomeric seals, slightly oversized radially and axially compressed
High abrasive wear or missalignment
HRS seals
HRS
HRSA
HRE
Reinforced seal body
HSS seals
Split seals for easy installation
HS6
HS8
Split seals and auxiliary lip
HSA7
HSA8 ★
★ SKF preferred offer for HS split seals
Radial clamping
HSA7C
HSA8C
Split seals for easy installation
HSS6
HSS8
Lubrication grooves
HSS4G
HSS5G
Standard installation
Blind installation
HS4
HS5
Same as HS4 with SKF Springcover
Standard installation
Blind installation
HSS4
HSS5
Same as HSS4 with SKF Springcover

Seals for heavy industrial applications, self retaining metal cased seals for open end or through housing bores, HDS range

Installation	Seal design	Seal design description	Material code	Material description	Maximum shaft surface speed	
					m/s	*ft/min*
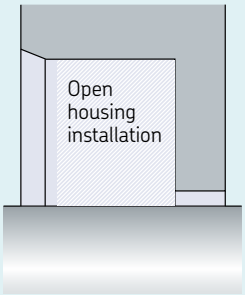	 HDS1	Spring activated sealing lip Metal clad self retaining seals	R D H V	Nitrile rubber (NBR) SKF Duralip (XNBR) SKF Duratemp (HNBR) SKF Duralife (FKM)	15 15 20 25	*2 950* *2 950* *3 900* *4 900*
	 HDS2	Spring activated sealing lip SKF Springcover spring retention Metal clad self retaining seal	R D H V	Nitrile rubber (NBR) SKF Duralip (XNBR) SKF Duratemp (HNBR) SKF Duralife (FKM)	15 15 20 25	*2 950* *2 950* *3 900* *4 900*
	 HDS7	Springless sealing lip Metal clad self retaining seal	R D H V	Nitrile rubber (NBR) SKF Duralip (XNBR) SKF Duratemp (HNBR) SKF Duralife (FKM)	15 15 20 25	*2 950* *2 950* *3 900* *4 900*
	 HDSA1  HDSA2	HDS1 and HDS2 seals with auxiliary dust lip Metal clad self retaining seal	R D H V	Nitrile rubber (NBR) SKF Duralip (XNBR) SKF Duratemp (HNBR) SKF Duralife (FKM)	15 15 20 25	*2 950* *2 950* *3 900* *4 900*
	 HDSF1  HDSF2	HDS1 and HDS2 seals with auxiliary excluder lip (TPU or PTFE) to exclude heavy contamination Metal clad self retaining seal	R D H V	Nitrile rubber (NBR) SKF Duralip (XNBR) SKF Duratemp (HNBR) SKF Duralife (FKM)	15 15 20 25	*2 950* *2 950* *3 900* *4 900*
	 HDSH2  HDSH7	HDS2 or HDS7 seals with auxiliary excluder lip (TPU or PTFE) to exclude heavy contamination Metal clad self retaining seal	R D H V	Nitrile rubber (NBR) SKF Duralip (XNBR) SKF Duratemp (HNBR) SKF Duralife (FKM)	15 15 20 25	*2 950* *2 950* *3 900* *4 900*
	 HDSD2	2 HDS2 seals in back to back arrangement Metal clad self retaining seal	R D H V	Nitrile rubber (NBR) SKF Duralip (XNBR) SKF Duratemp (HNBR) SKF Duralife (FKM)	15 15 20 25	*2 950* *2 950* *3 900* *4 900*
	 HDSE2	2 HDS2 seals in tandem arrangement Metal clad self retaining seal	R D H V	Nitrile rubber (NBR) SKF Duralip (XNBR) SKF Duratemp (HNBR) SKF Duralife (FKM)	15 15 20 25	*2 950* *2 950* *3 900* *4 900*

NOTE: Optional features for HDS seals: SKF Bore Tite outside diameter sealant and spacer lugs as separator between 2 seals in back to back or tandem arrangements.
Maximum values of application parameters (e.g. speed, temperature, pressure, STBM and DRO) should not be applied continuously nor simultaneously.

Operating temperature range				Pressure differential		Shaft-to-bore misalignment (STBM) TIR		Dynamic runout (DRO) TIR		Seal function	Typical applications
from	to	from	to								
°C		°F		MPa	*psi*	mm	*in*	mm	*in*		
–40 –40 –40 –20	+100 +100 +150 +200	*–40* *–40* *–40* *–4*	*+210* *+210* *+300* *+390*	0,1	*15*	1,6	*0.062*	2,4	*0.093*	Excellent oil or grease retention Exclusion of contamination (in excluder position) Excellent shaft followability	Large size machinery, customized or heavy duty machinery, industrial gearboxes
–40 –40 –40 –20	+100 +100 +150 +200	*–40* *–40* *–40* *–4*	*+210* *+210* *+300* *+390*	0,1	*15*	1,6	*0.062*	2,4	*0.093*	Designed for blind installation Excellent oil or grease retention Exclusion of contamination (in excluder position)	Large size machinery, metal rolling mills, mining crushers, paper mills etc. with blind seal installation
–40 –40 –40 –20	+100 +100 +150 +200	*–40* *–40* *–40* *–4*	*+210* *+210* *+300* *+390*	–	–	1,6	*0.062*	2,4	*0.093*	Excluder seal Highly effective exclusion of water and solid contaminants and retention of grease	Large size machinery, dust exclusion, metal rolling water and scale exclusion, paper mills water and pulp exclusion
–40 –40 –40 –20	+100 +100 +150 +200	*–40* *–40* *–40* *–4*	*+210* *+210* *+300* *+390*	0,1	–	1,6	*0.062*	2,4	*0.093*	Exclusion of light to moderate contaminants Excellent oil or grease retention	Large size machinery, industrial gearboxes operated in lightly contaminated environments
–40 –40 –40 –20	+100 +100 +150 +200	*–40* *–40* *–40* *–4*	*+210* *+210* *+300* *+390*	0,1	–	1,6	*0.062*	2,4	*0.093*	Exclusion of heavy contamination Excellent oil and grease retention	Special purpose machinery and gearboxes operated in heavily contaminated environments (e.g. vertical grinding mill in the cement industry, feeder in pulp processing etc.)
–40 –40 –40 –20	+100 +100 +150 +200	*–40* *–40* *–40* *–4*	*+210* *+210* *+300* *+390*	0,1	–	1,6	*0.062*	2,4	*0.093*	Exclusion of heavy contamination	Special purpose machinery and gearboxes operated in heavily contaminated environments (e.g. vertical grinding mill in the cement processing etc.)
–40 –40 –40 –20	+100 +100 +150 +200	*–40* *–40* *–40* *–4*	*+210* *+210* *+300* *+390*	0,1	–	1,6	*0.062*	2,4	*0.093*	Excellent oil and grease retention Exclusion of heavy contamination	Metal rolling, mining equipment, pulp & paper process and other heavy duty machinery
–40 –40 –40 –20	+100 +100 +150 +200	*–40* *–40* *–40* *–4*	*+210* *+210* *+300* *+390*	0,1	–	1,6	*0.062*	2,4	*0.093*	Excellent oil and grease retention Exclusion of heavy contamination	Metal rolling, mining equipment, pulp & paper process and other heavy duty machinery

Seals for heavy industrial applications, all-rubber seals for housings with cover plate, HS range

Installation	Seal design	Seal design description	Material code	Material description	Maximum shaft surface speed	
					m/s	*ft/min*
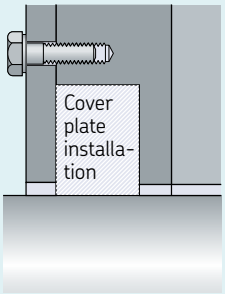	 HS4	Spring activated sealing lip All rubber seal, coverplate required!	R D H V	Nitrile rubber (NBR) SKF Duralip (XNBR) SKF Duratemp (HNBR) SKF Duralife (FKM)	15 15 20 25	*2 950* *2 950* *3 900* *4 900*
	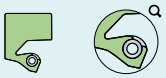 HS5	Spring activated sealing lip SKF Springcover spring retention All rubber seal, coverplate required!	R D H V	Nitrile rubber (NBR) SKF Duralip (XNBR) SKF Duratemp (HNBR) SKF Duralife (FKM)	15 15 20 25	*2 950* *2 950* *3 900* *4 900*
	 HS6	Split execution Spring activated sealing lip SKF Springlock All rubber seal, coverplate required!	R D H V	Nitrile rubber (NBR) SKF Duralip (XNBR) SKF Duratemp (HNBR) SKF Duralife (FKM)	10 10 10 10	*2 000* *2 000* *2 000* *2 000*
	 HS7	Split execution Control wire sealing lip SKF Springcover All rubber seal, coverplate required!	R D H V	Nitrile rubber (NBR) SKF Duralip (XNBR) SKF Duratemp (HNBR) SKF Duralife (FKM)	7,5 7,5 7,5 7,5	*1 500* *1 500* *1 500* *1 500*
	 HS8	**★ SKF preferred offer for HS split seals** Split execution Spring activated sealing lip SKF Springlock SKF Springcover spring retention All rubber seal, coverplate required!	R D H V	Nitrile rubber (NBR) SKF Duralip (XNBR) SKF Duratemp (HNBR) SKF Duralife (FKM)	10 10 10 10	*2 000* *2 000* *2 000* *2 000*

NOTE: HS seals are axially and radially oversized to ensure interference fit with cover plate and housing bore.
Maximum values of application parameters (e.g. speed, temperature, pressure, STBM and DRO) should not be applied continuously nor simultaneously.

Operating temperature range				Pressure differential		Shaft-to-bore misalignment (STBM) TIR		Dynamic runout (DRO) TIR		Seal function	Typical applications
from	to	from	to								
°C		°F		MPa	*psi*	mm	*in*	mm	*in*		
–40 –40 –40 –20	+100 +100 +150 +200	*–40* *–40* *–40* *–4*	*+210* *+210* *+300* *+390*	0,07	*11*	1,6	*0.062*	2,4	*0.093*	Excellent oil and grease retention Exclusion of contamination (in excluder position)	Large size machinery, customized or heavy duty machinery, industrial gearboxes
–40 –40 –40 –20	+100 +100 +150 +200	*–40* *–40* *–40* *–4*	*+210* *+210* *+300* *+390*	0,07	*11*	1,6	*0.062*	2,4	*0.093*	Designed for blind installation Excellent oil and grease retention Exclusion of contamination (in excluder position)	Large size machinery, wind turbines, metal rolling mills, mining crushers, paper mills etc. with blind seal installation
–40 –40 –40 –20	+100 +100 +150 +200	*–40* *–40* *–40* *–4*	*+210* *+210* *+300* *+390*	–	–	1,6	*0.062*	2,4	*0.093*	Grease (and limited oil) retention Exclusion of contamination (in excluder position)	Large size machinery, End of shaft not accessible, split seal is a requirement Large size, customized or heavy duty machinery
–40 –40 –40 –20	+100 +100 +150 +200	*–40* *–40* *–40* *–4*	*+210* *+210* *+300* *+390*	–	–	1,6	*0.062*	2,4	*0.093*	Grease retention Exclusion of contamination (in excluder position)	Large size machinery, industrial gearboxes, metal rolling mills, mining crushers, paper mills etc. End of shaft not accessible, split seal is a requirement. Only in case of narrow installation space where closing the spring lock is not an option
–40 –40 –40 –20	+100 +100 +150 +200	*–40* *–40* *–40* *–4*	*+210* *+210* *+300* *+390*	–	–	1,6	*0.062*	2,4	*0.093*	Grease (and limited oil) retention Exclusion of contamination (in excluder position)	Large size machinery, industrial gearboxes,wind turbines, metal rolling mills, mining crushers, paper mills etc. End of shaft not accessible, split seal is a requirement SKF Springcover spring retention facilitates the split seal installation Blind installation into large size, customized or heavy duty machinery

Seals for heavy industrial applications, all-rubber reinforced seals for housings with cover plate, HSS range

Installation	Seal design	Seal design description	Material code	Material description	Maximum shaft surface speed	
					m/s	*ft/min*
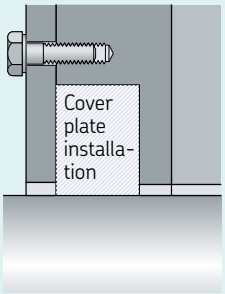	 HSS4	Spring activated sealing lip Reinforced all rubber seal, coverplate required!	R H V	Nitrile rubber (NBR) SKF Duratemp (HNBR) SKF Duralife (FKM)	15 20 25	*2 950* *3 900* *4 900*
	  HSS5	Spring activated sealing lip SKF Springcover spring retention Reinforced all rubber seal, coverplate required!	R H V	Nitrile rubber (NBR) SKF Duratemp (HNBR) SKF Duralife (FKM)	15 20 25	*2 950* *3 900* *4 900*
	  HSS6	Split execution Spring activated sealing lip SKF Springlock Reinforced all rubber seal, coverplate required!	R H V	Nitrile rubber (NBR) SKF Duratemp (HNBR) SKF Duralife (FKM)	10	*2 000*
	   HSS8	★ **SKF preferred offer for HSS split seals** Split execution Spring activated sealing lip SKF Springlock SKF Springcover spring retention Reinforced all rubber seal, coverplate required!	R H V	Nitrile rubber (NBR) SKF Duratemp (HNBR) SKF Duralife (FKM)	10	*2 000*

NOTE: HSS seals are axially and radially oversized to ensure interference fit with cover plate and housing bore.
Optional feature for HSS seals: Lubrication grooves for re-lubrication between 2 seals.
Maximum values of application parameters (e.g. speed, temperature, pressure, STBM and DRO) should not be applied continuously nor simultaneously.

Operating temperature range				Pressure differential		Shaft-to-bore misalignment (STBM) TIR		Dynamic runout (DRO) TIR		Seal function	Typical applications
from	to	from	to								
°C		*°F*		MPa	*psi*	mm	*in*	mm	*in*		
–40 –40 –20	+100 +150 +200	*–40* *–40* *–4*	*+210* *+300* *+390*	0,07	*11*	1,6	*0.062*	2,4	*0.093*	Excellent oil and grease retention Exclusion of contamination (in excluder position)	Large size machinery, customized or heavy duty machinery, industrial gearboxes
–40 –40 –20	+100 +150 +200	*–40* *–40* *–4*	*+210* *+300* *+390*	0,07	*11*	1,6	*0.062*	2,4	*0.093*	Designed for blind installation Excellent oil and grease retention Exclusion of contamination (in excluder position)	Large size machinery, metal rolling mills, mining crushers, paper mills etc. with blind seal installation
–40 –40 –20	+100 +150 +200	*–40* *–40* *–4*	*+210* *+300* *+390*	–	–	1,6	*0.062*	2,4	*0.093*	Grease (and limited oil) retention Exclusion of contamination (in excluder position)	Large size machinery, industrial gearboxes, metal rolling mills, mining crushers, paper mills etc. End of shaft not accessible, split seal is a requirement Large size, customized or heavy duty machinery
–40 –40 –20	+100 +150 +200	*–40* *–40* *–4*	*+210* *+300* *+390*	–	–	1,6	*0.062*	2,4	*0.093*	Grease (and limited oil) retention Exclusion of contamination (in excluder position)	Large size machinery, industrial gearboxes,wind turbines, metal rolling mills, mining crushers, paper mills etc. End of shaft not accessible, split seal is a requirement SKF Springcover spring retention facilitates the split seal installation Blind installation into large size, customized or heavy duty machinery

Seals for heavy industrial applications, selected main designs, Polyurethane seal HRS

Installation	Seal design	Seal design description	Material code	Material description	Maximum shaft surface speed	
					m/s	*ft/min*
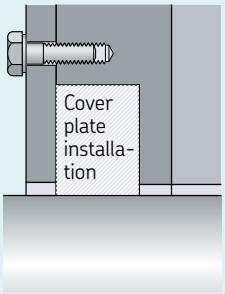	 HRS11	Highh performance polyurethane radial shaft seal with spring activated sealing lip Cover plate required	HP GP	H-ECOPUR (D < 600 mm) G-ECOPUR (D > 600 mm)	2,5	*490*
	 HRSA1	Highh performance polyurethane radial shaft seal with spring activated sealing lip and auxiliary lip Cover plate required	HP GP	H-ECOPUR (D < 600 mm) G-ECOPUR (D > 600 mm)	2,5	*490*
	 HRE11	Highh performance polyurethane radial excluder seal Cover plate required	HP GP	H-ECOPUR (D < 600 mm) G-ECOPUR (D > 600 mm)	2,5	*490*
	 HRS12	Highh performance polyurethane radial shaft seal split execution, SKF Springlock spring activated sealing lip Cover plate required	HP GP	H-ECOPUR (D < 600 mm) G-ECOPUR (D > 600 mm)	2,5	*490*
	 HRSA12	High performance polyurethane radial shaft seal split execution, SKF Springlock spring activated sealing lip Cover plate required	HP GP	H-ECOPUR (D < 600 mm) G-ECOPUR (D > 600 mm)	2,5	*490*
	 HRE12	High performance polyurethane radial excluder seal Cover plate required	HP GP	H-ECOPUR (D < 600 mm) G-ECOPUR (D > 600 mm)	2,5	*490*

Operating temperature range				Pressure differential		Shaft-to-bore misalignment (STBM) TIR		Dynamic runout (DRO) TIR		Seal function	Typical applications
from	to	from	to								
°C		°F		MPa	*psi*	mm	*in*	mm	*in*		
–30	+110	–22	+230	0,05	7	1,5	0.059	3	0.118	Lubricant retention for grease with NLGI > 1	Wind turbine main shaft, heavy industrial applications that require high wear resistance and where there is access to the end of the shaft
–30	+110	–22	+230	0,05	7	1,5	0.059	3	0.118	Lubricant retention for grease with NLGI > 1 with light contamination protection	Wind turbine main shaft, heavy industrial applications that require high wear resistance with light contamination protection where there is access to the end of the shaft
–30	+110	–22	+230	0,05	7	1,5	0.059	3	0.118	Contamination exclusion	Wind turbine main shaft, heavy industrial applications that require high wear resistance and high contamination protection where there is access to the end of the shaft
–30	+110	–22	+230	0,05	7	1,5	0.059	3	0.118	Lubricant retention for grease with NLGI > 1	Wind turbine main shaft, heavy industrial applications that require high wear resistance and where there is **no** access to the end of the shaft
–30	+110	–22	+230	0,05	7	1,5	0.059	3	0.118	Lubricant retention for grease with NLGI > 1 with light contamination protection	Wind turbine main shaft, heavy industrial applications that require high wear resistance with light contamination protection where there is **no** access to the end of the shaft
–30	+110	-22	+230	0,05	7	1,5	0.059	3	0.118	Contamination exclusion	Wind turbine main shaft, heavy industrial applications that require high wear resistance with light contamination protection where there is **no** access to the end of the shaft

How to read a designation

Matrix 3

Dimension / Designation examples

Dimension | Seal design | Material

Designation	Shaft (d1)	Decimal Code[1]	Bore (D)	Decimal Code[1]	Bore Depth (B)	Decimal Code[1]	Seal design	Main Lip	Auxiliary lip
1200 - 1316 - 48 HDS2Y R	12.00 in	1200	13.25 in	1316	0.75 in	48	HDS2Y	NBR	–
616 - 700 - 32 HSS5G V	6.25 in	616	7.00 in	700	0.50 in	32	HSS5G	FKM	–
1816 - 2016 - 100 HDSF2L08 DU	18.25 in	1816	20.25 in	2016	1.00 in	100	HDSF2L08[2]	XNBR	H-ECOPUR
675 X 725.2 X 28 HDSA2 DD	675 mm	–	725.2 mm	–	28 mm	–	HDSA2	XNBR	XNBR

Separators (- inch, X metric)

1) Inch size decimal code in **table 1** (decimals multiplied by 64)
2) "L08" indicates a 0.125 inch lug length from the **table 2**

Matrix 4

Dimensions

dXDXB	Metric seals real dimensions in mm
d-D-B	Inch size decimal code in **table 1** (inch decimals multiplied by 64)

d	Shaft diameter
D	Seal housing bore diameter
B	Housing bore depth / HDS seal width

Table 1

Inch size Decimal code

Key	*Inch*	Key	*Inch*	Key	*Inch*
00	*0*	25	*0.391*	40	*0.625*
01	*0.016*	26	*0.406*	41	*0.641*
02	*0.031*	27	*0.422*	42	*0.656*
03	*0.047*	28	*0.438*	43	*0.672*
04	*0.063*	29	*0.453*	44	*0.688*
05	*0.078*	30	*0.469*	45	*0.703*
06	*0.094*	31	*0.484*	46	*0.719*
07	*0.109*	32	*0.500*	47	*0.734*
08	*0.125*	22	*0.344*	48	*0.750*
09	*0.141*	23	*0.359*	49	*0.766*
10	*0.156*	24	*0.375*	50	*0.781*
11	*0.172*	25	*0.391*	51	*0.797*
12	*0.188*	26	*0.406*	52	*0.813*
13	*0.203*	27	*0.422*	53	*0.828*
14	*0.219*	28	*0.438*	54	*0.844*
15	*0.234*	29	*0.453*	55	*0.859*
16	*0.250*	30	*0.469*	56	*0.875*
17	*0.266*	31	*0.484*	57	*0.891*
18	*0.281*	33	*0.516*	58	*0.906*
19	*0.297*	34	*0.531*	59	*0.922*
20	*0.313*	35	*0.547*	60	*0.938*
21	*0.328*	36	*0.563*	61	*0.953*
22	*0.344*	37	*0.578*	62	*0.969*
23	*0.359*	38	*0.594*	63	*0.984*
24	*0.375*	39	*0.609*	64	*1.000*

Table 2

Lugs specifications (metric) HDS1L / HDS2L / HDS7L

Metric Code	Length (mm)
L3	3
L4	4
L5	5
L6	6
L7	7
L8	8
L9	9
L10	10
L11	11
L12	12

Lugs specifications (*inch*) HDS1L / HDS2L / HDS7L

Inch Code	Length (*in*)
L08	*0.125*
L10	*0.156*
L12	*0.188*
L16	*0.250*
L20	*0.313*
L24	*0.375*
L28	*0.438*
L32	*0.500*

Matrix 5

Seal design / Material designation example

	Group 1	Group 2	Group 3	Group 4	Group 5	Group 6	Group 7
HDS design	A	1	Y	L6	R	D
HS / HSS design	–	5	–	G	H	–
HRS design	A	1	–	–	GP	–

Matrix 6

Seal design and material

	HDS designs	HS / HSS designs	HRS designs
Group 1			
Group 2	**Auxiliary lip (dust lip)** A → Elastomeric auxiliary lip F → Polyurethane or PTFE auxiliary lip on the back of the seal H → Polyurethane or PTFE auxiliary lip on the face of the seal	**Polyurethane or PTFE** A → Elastomeric auxiliary lip	**Auxiliary lip** A → Polyurethane auxiliary lip
Group 3	**Main sealing lip features** 1 → Seal with spring 2 → Seal with spring and SKF Springcover 7 → Seal without spring	**Main sealing lip features** 4 → Solid seal with spring 5 → Solid seal with spring and SKF Springcover 6 → Split seal with spring 7 → Split seal with control wire and SKF Springcover 8 → Split seal with spring and SKF Springcover	**Main sealing lip features** 1 → Solid seal with spring 2 → Split seal with spring
Group 4	**Outside features** 9 → Stainless steel case Y → SKF Bore Tite coating		
Group 5	**Relubrication features** L → Spacer lugs: spacer lug lenght according to **table 2**	**Relubrication features** G → Relubrication grooves on the back of the seal	
Group 6	**Main sealing lip material** R → NBR- nitrile rubber H → HNBR - hydrogenated nitrile rubber D → SKF Duralip (XNBR) V → SKF Duralife (FKM)	**Main sealing lip material** R → NBR – nitrile rubber H → HNBR – hydrogenated nitrile rubber D → SKF Duralip (XNBR) V → SKF Duralife (FKM)	**Sealing lip material** HP H-ECOPUR (D < 600 mm) GP G-ECOPUR (D > 600 mm)
Group 7	**Auxiliary lip material** D → XNBR with HDSA T → PTFE U → H-ECOPUR (D < 600 mm) G-ECOPUR (D > 600 mm)		

Metal-cased seals

General

SKF metal-cased seals are specially designed to withstand the extreme conditions encountered in heavy-duty applications. The seals include the highly engineered and commonly used HDS1, HDS2 and HDS7, as well as designs with additional excluder lips, such as the HDSA, HDSF, HDSH. HDS2 and HDS7 seals can be ordered as a unit in back to back (e.g. HDSD2) or in tandem (e.g. HDSE2) arrangements. These seals perform exceptionally well in the very contaminated environment of metal rolling mills, the pulp and wet section of paper mills, mining and construction machinery and more universal industrial drive applications.

Size flexibility

SKF metal-cased seals are available in a wide range of sizes. Seals in customized dimensions are created as required without any new tooling, resulting in short lead times. In addition, the minimum order quantity is just one seal, enabling a flexible solution for any heavy duty application, no matter how big or small the job.

The HDS seals are available for all shaft diameters within the ranges listed in **table 5** on **page 200**. The size tables starting on **page 203** list a selection of sizes. Contact your SKF sales representative for additional information.

Ease of installation

SKF's heavy duty application self-retaining HDS seals are ideal for use in open housing bore installations. For housings with cover plates and axial clamping of the seal into the housing bore, please refer to the all rubber SKF seals marked HS and HSS on **page 90**.

Fig. 1

HDS1

Fig. 2

HDS2

HDS1 and HDS2

The most commonly used metal-cased seals are the HDS1 and HDS2 seals, designed for general-purpose applications. They are equipped with a heavy-duty metal case and a stainless steel garter spring.

The HDS1 seal (→ **fig. 1)** has a spring installed in the SKF Springlock groove (→ **fig. 11** on **page 191**). For blind installations, where spring displacement may go undetected, HDS2 seals (→ **fig. 2**) have an SKF Springcover (→ **fig. 12** on **page 191**) that retains the spring in the groove. The HDS1 and HDS2 seals are available with adjustable or fixed-width spacer lugs (→ **page 190**)

The HDS1 and HDS2 seals can be designed with a PTFE or ECOPUR auxiliary lip, positioned and directed in either of the two ways shown in **figs. 6** and **7** on **page 188** and with optional SKF Bore Tite outer diameter sealant coating (→ **fig. 13** on **page 191**).

Nitrile rubber (NBR) is standard for these seal designs, but both of them are also available in SKF Duralip (XNBR), SKF Duratemp (HNBR) and SKF Duralife (FKM).

Fig. 3

HDS7

HDS7

The ingress of water and solid contaminants is a common cause of bearing failures. To solve this, SKF developed in its flexible in size heavy duty HDS radial shaft seals family the HDS7 seal with enhanced exclusion capabilities (→ **fig. 3**). It was originally designed for grease lubricated bearings in rolling mill stands, where water and scale are a constant threat to bearing service life. The HDS7 is also recommended for use in large gearboxes, coal pulverizers and cement grinders and all other applications where excluding contamination and protecting the drive train challenges the sealing system. Customers have reported that the HDS7 seal is easier to install and provides longer service life than common seal designs.

The HDS7 seal features an optimized non-spring-loaded lip profile, designed to retain grease and aggressively pump contaminants away from the lip. The lip concept of HDS7 seals also reduces radial loads, which otherwise can lead to elevated underlip temperatures and increased seal wear. HDS7 seals are installed with the sealing lip facing the air side. The HDS7 can also be used in oil lubricated applications in back-to-back arrangements with a spring-loaded seal design, e.g. an HDS1 or HDS2 (→ **figs. 1** and **2**), in the includer position.

HDS7 seals can also be equipped with a PTFE or ECOPUR auxiliary lip positioned and directed as shown in **fig. 7** on **page 188**.

The HDS7 seal is available with a nitrile sealing lip (NBR) for general use, SKF Duralip (XNBR) for increased wear resistance in abrasive environments and SKF Duratemp (HNBR) that combines improved wear resistance with increased temperature capability. For certain applications, SKF Duralife (FKM) can also be specified. See page 31 for additional information about different sealing lip materials.

SKF Bore Tite outer diameter sealant coating (**see page 191**) and spacer lugs (see **page 190**) are available as options.

Fig. 4

HDSA1

Fig. 5

HDSA2

HDSA seals

HDSA seals are designed with an elastomeric auxiliary lip in addition to the sealing lip (→ **figs. 4** to **7**). They are generally used where additional protection from light contaminants is needed.

HDSA2 is designed with an SKF Springcover for spring retention in blind installations e. g. in metal rolling mill chocks, while HDSA1 is designed without an SKF Springcover for industrial drive and gearbox applications (→ **fig. 12** on **page 191**).

HDSA is also available with SKF Bore Tite coating (see **page 191**).

HDSA seals are available with sealing lips made of nitrile rubber (NBR), SKF Duralip (XNBR), SKF Duratemp (HNBR) or SKF Duralife (FKM). For shaft diameters up to 1 200 mm (*47 in*), the standard auxiliary lip is made of SKF Duralip.

Fig. 6

HDSF2

Fig. 7

HDSH2

HDSF and HDSH seals

HDS1, HDS2 and HDS7 seals can be designed with an auxiliary PTFE or ECOPUR lip to further protect the bearing and sealing lip(s) from dust particles in heavily contaminated environments, for example mining and cement industries. The lip is then positioned and directed as shown in **fig. 6**.

The auxiliary lip is providing strong protection against solid contamination (**fig. 7**).

The auxiliary lip is clamped between the metal case and the rubber seal body without significantly increasing the total seal width. It has very good wear resistance, can withstand dry running and contributes to improved sealing performance while only generating a minimal friction torque. The PTFE auxiliary lip has outstanding chemical and temperature resistance. The combination of a PTFE auxiliary lip and a main lip made of the fluoro rubber compound SKF Duralife creates a particularly effective sealing solution for applications with elevated temperatures and required seal resistance against process or cleaning fluids.

Special care must be taken to prevent damaging the PTFE lip during installation. Refer to instructions in paragraph PTFE seals on **pages 96** and **97**.

The letters F and H in the product name indicate a PTFE or ECOPUR auxiliary lip design including the lip's position and direction; see for example the HDSF2 (→ **fig. 6**) and HDSH2 (→ **fig. 7**).

SKF Bore Tite Coating

SKF Bore Tite Coating is optional available as a water-based acrylic sealant for all SKF metal-cased HDS seals. The sealant is used as a coating on the outside diameter of the seal. For more details see **page 191.**

! ECOPUR is a thermoplastic polyurethane (TPU) and has outstanding mechanical properties like abrasion resistance against contaminants. G-ECOPUR and H-ECOPUR are hydrolysis-resistant polyurethanes with similar properties. The size of the seal will dictate whether G-ECOPUR or H-ECOPUR is used.

Fig. 8

HDSD2

Fig. 9

HDSE2

HDSD and HDSE seals

HDSD seals (→ **fig. 8**) are designed with two sealing lips facing opposite directions (back to back arrangement). These seals are typically used in applications where two fluids must be kept separated e.g. the bearing lubricant and a process fluid. When using an HDSD seal, it is very important to provide the means to lubricate the sealing lips. To do this, the cavity between the sealing lips must be filled completely with grease prior to installation.

HDSE seals (→ **fig. 9**) feature two sealing lips facing the same direction (tandem arrangement). They are typically used when a back-up seal would otherwise be needed for retention or exclusion purposes. Like for HDSD seals, for HDSE seals the cavity between the sealing lips must be filled with grease prior to installation so that the seal functions properly.

HDSD and HDSE seals are equipped with an SKF Springcover (HDSD2, HDSE2) (→ **fig. 12** on **page 191**). All of them are available in nitrile rubber (NBR), SKF Duralip (XNBR), SKF Duratemp (HNBR) or SKF Duralife (FKM).

HDSD and HDSE seals are available optional with SKF Bore Tite outer diameter sealant coating (**see page 191**).

Additional design features for HDS seals

Spacer lugs

Spacer lugs are available for all metal-cased HDS designs to separate seals in tandem or back-to-back arrangements to provide space for sealing lip lubrication (→ **fig. 10**).

Traditional fixed-width lugs for metal-cased HDS seals are 9,5 mm (*0.375 in*) in diameter and are available in widths from 3,2 mm (*0.125 in*) to 12,7 mm (*0.5 in*) in increments of 1,6 mm (*0.063 in*). The fixed-width lug is an available option for all metal-cased seals.

All standard adjustable lugs are 9,5 mm (*0.375 in*) in diameter and 9,5 mm (*0.375 in*) in width. They can be adjusted to smaller widths in 1,6 mm (*0.063 in*) increments by removing the steel washers. The lugs may also be removed entirely. Longer, adjustable lugs, with a width of 12,7 mm (*0.5 in*), are available on request, however, it can be more difficult to reduce their width.

Certain small seal cross sections may require special small diameter lugs, 5,3 mm (*0.210 in*), with a width range of 1,6 to 3,2 mm (*0.063 to 0.125 in*).

The lugs are placed around the heel of the seal in four, six or eight equally spaced locations, depending on the seal outside diameter (→ **table 3**).

Fig. 10

HDS1 with spacer lug

Table 3

Number of spacer lugs needed

Spacer lugs	Housing bore diameter			
	from	incl.	from	incl.
–	mm		*in*	
4		762		*30*
6	762	1 143	*30*	*45*
8	1 143		*45*	

Table 4

Lugs specifications (metric) HDS1L / HDS2L / HDS7L

Metric Code	Length (mm)
L3	3
L4	4
L5	5
L6	6
L7	7
L8	8
L9	9
L10	10
L11	11
L12	12

Lugs specifications (*inch*) HDS1L / HDS2L / HDS7L

Inch Code	Length (*in*)
L08	*0.125*
L10	*0.156*
L12	*0.188*
L16	*0.250*
L20	*0.313*
L24	*0.375*
L28	*0.438*
L32	*0.500*

SKF Springlock

The SKF Springlock is a sealing lip feature that surrounds 270° of the garter spring diameter (→ **fig. 11**). It helps hold the spring in position during installation and is standard on all HS, HSS seals and spring-loaded, metal-cased HDS seals.

Fig. 11

SKF Springcover

For blind installations, where spring displacement may go undetected, the SKF Springcover (→ **fig. 12**) can be specified. It also protects the spring from dirt, water and other contaminants. SKF Springcover is flexible and covers the exposed portion of the stainless steel garter spring without adversely affecting the spring's capability.

Fig. 12

SKF Bore Tite Coating

The static sealing ability between a metal outside diameter and the housing bore is somewhat limited. This is particularly the case with low-viscosity and wetting fluids. With this in mind, HDS seals can be ordered with the optional SKF Bore Tite Coating (→ **fig. 13**), a water-based acrylic sealant. SKF Bore Tite Coating is green in colour, does not harden and serves to fill small imperfections in the housing bore.

- The coating thickness is 0,03 to 0,07 mm (*0.0012* to *0.0028 in*)
- The coating compensates for small imperfections in the housing bore surface. It is recommended for bore surface texture greater 2,5 µm (*100 µin*) R_a
- The temperatures resistance is up to 200 oC (*390 °F*)

Media compatibility is very good for oils, greases, aqueous acids and alkalis, alcohols, glycols. With aromatics, ketones and esters the coating is not compatible.

Fig. 13

All-rubber seals

General

SKF offers a wide range of all-rubber seals in customized dimensions for housings with cover plates and axial clamping of the seal into the housing bore.

SKF all-rubber seals are specially designed to withstand the extreme conditions encountered in heavy-duty applications. The assortment includes the HS and HSS seals. The HSS seals feature a reinforced seal body for improved stability. Both designs are available as split seals to enable easy installation without shaft dismounting in large machinery. These seals perform exceptionally well in the very demanding environment of wind turbines, metal rolling mills, mining and construction machinery and more universal industrial drive applications.

Size flexibility

SKF all-rubber seals are available in a wide range of sizes. Seals in customized dimensions are created as required without any new tooling resulting in short lead times. In addition, the minimum order quantity is just one seal, enabling a flexible solution for any heavy duty application, no matter how big or small the job.

For all shaft diameters within the ranges listed in **table 6** on **page 201**. Also, see the product tables starting on **page 203** for a selection of sizes. Contact your SKF sales representative for additional information.

Ease of installation

SKF's heavy duty application axial clamped all-rubber seals are ideal for use in housing bore installations with cover plates. For open housings without cover plates please refer to the metal cased seals HDS on **page 90.**

Fig. 14

HS4

Fig. 15

HS5

HS all-rubber seals

HS seals, available in solid and split executions, are all-rubber seals, designed without any reinforcement. They are manufactured oversized relative to the housing bore diameter and depth to enable proper compression and stability. A cover plate (→ **figs. 26** and **27** on **pages 94** and **95**) is required to compress the seal axially, helping to stabilize the seal in the housing bore.

A stainless steel garter spring located in the SKF Springlock groove (→ **fig. 23** on **page 195**) provides the appropriate radial load against the shaft.

For certain applications, HS seals are also available with an auxiliary lip and / or band clamp (HSA and HSAC designs). Contact SKF for more information.

HS seals are available in nitrile rubber (NBR), SKF Duralip (XNBR), SKF Duratemp (HNBR) or SKF Duralife (FKM).

Solid execution

Standard solid HS seals can accommodate shaft diameters starting at 165 mm (*6.5 in*) but basically do not have an upper size limit.

HS4 seals (→ **fig. 14**) have a solid, all-rubber design and incorporate a spring-loaded sealing lip. They feature an SKF Springlock groove (→ **fig. 23** on **page 195**). For a proper fit in the housing bore, a cover plate is required (→ **figs. 26** and **27** on **pages 94** and **95**).

HS5 seals (→ **fig. 15**) have the same basic design as HS4 seals with the addition of an SKF Springcover (→ **fig. 24** on **page 195**) to hold the spring in place during installation and protect it from contaminants.

Both designs have a threaded spring connection (→ **fig. 22a** on **page 195**).

Fig. 17

HS6

Fig. 18

HS7

HS8

Fig. 16

Installation

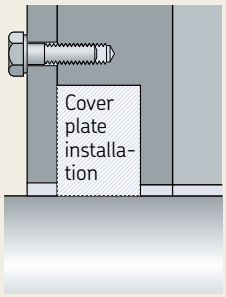

Split execution

In applications where shaft removal is impractical, HS all-rubber split seals are an excellent choice. They are simply placed around the shaft and pushed evenly into the housing bore with the split at the 12 o'clock position. A cover plate (→ **figs. 27** and **28** on **pages 95**) must be used to compress the seal axially to stabilize it in the housing bore.

HS split seals perform best with grease or high-viscosity lubricants. However, low-viscosity lubricants are also suitable if the level of lubricant is kept below the shaft centre line, which is particularly important at considerable surface speeds. Split seals are preferably used on horizontal shafts, but can also be used on vertical shafts in grease lubricated applications.

HS6 seals (→ **fig. 17**) are designed with a spring-loaded sealing lip and an SKF Springlock (→ **fig. 23** on **page 195**). They feature a separate loose spring and a hook-and-eye spring connection for shaft diameters above 455 mm (*18 in*) unless otherwise specified (→ **fig. 22b** on **page 195**). Smaller sizes of HS6 seals come with a threaded spring connection. For a proper fit in the housing bore, a cover plate is required (→ **figs. 26** and **27** on **page 95**).

HS7 seals (→ **fig. 18**), designed **for grease lubricated applications only**, have a wire controlled sealing lip and are designed with both an SKF Springlock and SKF Springcover (→ **figs. 23** and **24** on **page 195**). All HS7 seals feature a control-wire spring connection (→ **fig. 22c** on **page 195**). The spring is completely enclosed and the connection is made by running the control wire into the centre of the spring coil across the split (butt joint). A built-in spring tension holds the sealing lip on the shaft. For a proper fit, a cover plate is required (→ **figs. 27** and **28** on **pages 95**). Due to the unique design that enables easier installation, a gap and minor leakage may occur at the joint even after the cover plate is installed. It is necessary to place the split at the 12 o'clock position during installation (→ **fig. 25** on **page 94**). HS7 seals do not have the high sealing characteristics of other HS seals, but are the easiest to install.

HS8 seals (→ **fig. 18**) are designed with a spring-loaded sealing lip, SKF Springlock, SKF Springcover (→ **figs. 23** and **24** on **page 195**) and a hook-and-eye spring connection (→ **fig. 22b** on **page 195**) for shaft diameters above 455 mm (*18 in*). Smaller sizes of HS8 seals come with a threaded spring connection. The spring is entirely enclosed except for a small portion on either side of the split. HS8 seals provide the most effective sealing performance of all split HS seals and are the preferred design for retaining low-viscosity lubricants and for water exclusion. HS8 seals perform best on horizontal shafts, but can also be used on vertical shafts provided they are not flooded with lubricant.

More information on spring connections for split seals can be found on **page 195**.

Fig. 19

Fig. 20

HSS reinforced all-rubber seals

HSS seals constitute a range of seals with a variety of design following the same design standard and designation system as the HS assortment. Additional features are the reinforced seal body and optional lubrication grooves **fig. 20** at the back of the seal to allow re-greasing between the sealing lips in back-to-back or tandem installations of two HSS seals.

HSS4 and HSS5 are solid, HSS6 and HSS8 are split seal executions. HSS5 and HSS8 are featured with the SKF Springcover (→ **fig. 24** on **page 195**). For seals with lubrication grooves the designation includes the suffix G (e.g. HSS5G).

HSS seals are available in nitrile rubber (NBR), SKF Duratemp (HNBR) or SKF Duralife (FKM) for all shaft diameters within the ranges listed in **matrix 2** on **page 180**. Also see the product **tables** starting on **page 203**. for a selection of sizes. Additional please refer to the unsurpassed size flexibility of HSS seals, customized dimensions without any new tooling and minimum order quantity of one seal only. Contact your SKF sales representative for additional information.

HSS4 / HSS6

HSS5 / HSS8

Fig. 21

HSA7 / HSA8

HSA7C / HSA8C

HSA7, HSA8, HSA7C, HSA8C

HSA7 and HSA8 are specifically designed for the harsh conditions in the very slow rotating horizontal grinding mills in cement and mining industries. The seals feature a stronger shaft interference than HS7 and HS8 seals for an improved lubricant retention at very low speeds and an additional auxiliary dust lip to keep the heavy dust contamination in the application out of the bearing.

HSA7C and HSA8C seals are equipped with an outer diameter retention ring to simulate the outer diameter interference in radially open housing bores (→ **fig 21**)

HSA7 seals (→ **fig. 21**) is designed for grease lubricated applications only, have a wire controlled sealing lip and are designed with both an SKF Springlock and SKF Springcover (→ **figs. 23** and **24** on **page 195**).

For a proper fit, a cover plate is required (**figs. 26** and **27** on **page 95**). Due to the unique design that enables easier installation, a gap and minor leakage may occur at the joint even after the cover plate is installed. It is necessary to place the split at the 12 o'clock position during installation (→ **fig. 24** on **page 92**).

HSA7 seals do not have the advanced sealing characteristics of other HS seals, but are the easiest to install.

HSA8 seals are designed with a spring-loaded sealing lip, SKF Springlock, SKF Springcover (→ **figs. 23** and **24** on **page 195**) and a hook-and-eye spring connection (→ **fig. 22b** on **page 195**). The spring is entirely enclosed except for a small portion on either side of the split.

HSA8 seals provide the most effective sealing performance and are the preferred design for retaining low-viscosity lubricants.

Additional design features for HS and HSS seals

Spring connections for split seals

There are different ways to connect the stainless steel garter springs of HS and HSS split seals. A threaded spring connection (→ **fig. 22a**) is used for all solid HS and HSS seals as well as the split HS6 / HSS6 and HS8 / HSS8 seals for shaft diameters ≤ 455 mm (*18 in*). A hook-and-eye spring connection (→ **fig.22b**) is used for HS6 / HSS6 and HS8 / HSS8 seals for shaft diameters > 455 mm (*18 in*). HS7 seals feature the special control-wire connection (→ **fig.22c**), are only to be used for grease applications when the other spring connections cannot be installed.

Fig. 22

Spring connections

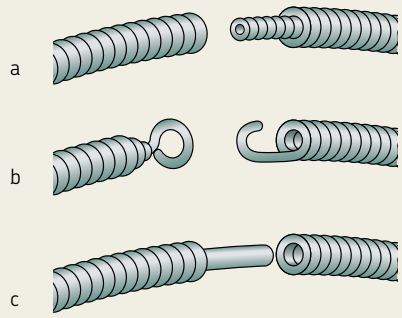

SKF Springlock

The SKF Springlock is a sealing lip feature that surrounds 270° of the garter spring diameter (→ **fig. 23**). It helps holding the spring in position during installation and is standard on all HS and HSS seals.

Fig. 23

SKF Springcover

For blind installations, where spring displacement may go undetected, the SKF Springcover (→ **fig. 24**) can be specified. It also protects the spring from dirt, water and other contaminants. SKF Springcover is flexible and covers the exposed portion of the stainless steel garter spring without adversely affecting the spring's capability.

Fig. 24

HRS seals

General

HRS seals from SKF were specially designed to cope with the harsh conditions that wind turbine main shafts face. They offer lubricant retention and contamination exclusion to reduce the risks of lubrication or contaminant-related bearings failures and their consequences, such as production downtime and repair costs. These high performance radial shaft seals can deliver significantly extended service life and help operators to reduce maintenance costs and ultimately increase reliability. These seals can also be used for other heavy duty applications.

Benefits and features

- Extended service life due to high abrasion resistance
- Reduced bearing failures related to contamination
- Resistance against hydrolysis, UV radiation and ozone due to H-ECOPUR and G-ECOPUR material
- Increased reliability
- Facilitated up-tower retrofits
- Reduced OPEX during machine life
- Easy installation
- Customization of seal size thanks to flexible manufacturing process

Easy up-tower usage
The split seals are single packed and designed to fulfill the needs in the wind aftermarket. Each package contains a seal with the garter spring and an installation guide. To allow for easy handling and transportation for large diameter seals, these seals are folded. For more information on installing a split seal, please see **page 91.**

Fig. 25

HRS1

Fig. 26

HRSA

HRS and HRSA radial shaft seals
These large diameter radial shaft seals (→ **figs. 25 and 26**), are designed to protect large size bearings in grease lubrication and low pressure differentials. A flexible manufacturing process allows a degree of customization to the seal dimensions to help meet unusual requirements.

HRSA seals (→ **fig. 26**) feature an additional auxiliary lip to protect the seal and the application against contamination from the environment.

HRS and HRSA seals feature a garter spring that stabilizes the sealing lip, increases the lip followability (DRO and STBM) and maintains the sealing function even in alternating operating temperatures. The seals are designed to secure the garter spring inside the spring groove once the seals are installed.

Solid seals feature an endless garter spring, while split seals feature an open connection that is closed during seal installation.

Fig. 27

HRS seals

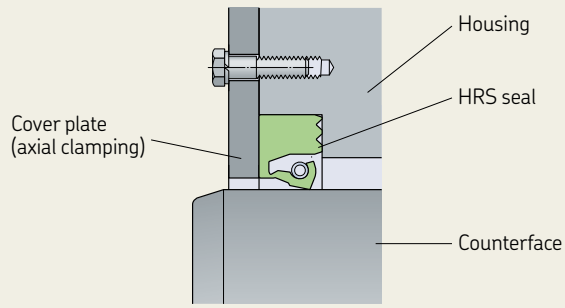

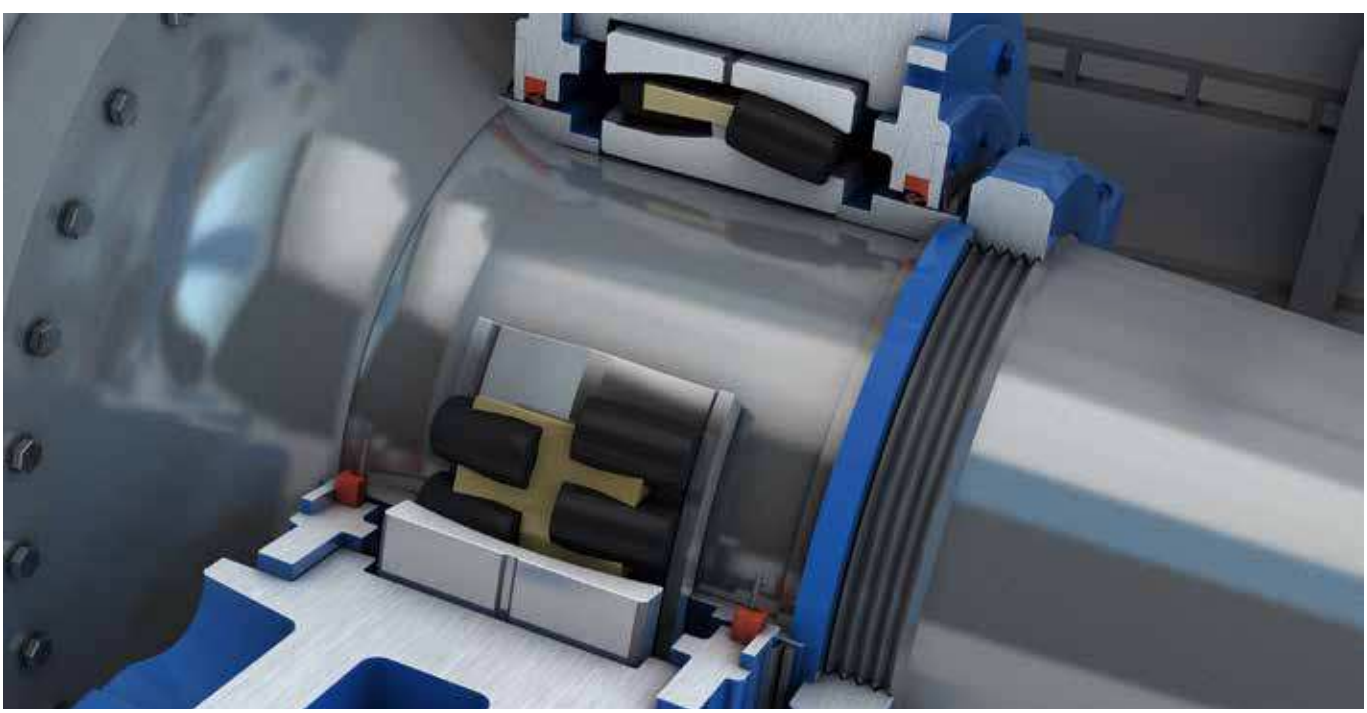

HRE radial excluder seal
HRE is a radial contacting excluder seal (→ **fig. 28**), designed to be used in combination with HS, HSS or HRS radial shaft seals as additional protection against contamination. A flexible manufacturing process allows a degree of customization to the seal dimensions to help meet unusual requirements.

HRE seals are additional auxiliary lips for contamination protection to be used in combination with HS, HSS and HRS seals. They are generally used where additional protection from contaminants is needed.

To avoid sealing lip with housing interference please see the dimensional housing requirements on **page 91.**

Fig. 28

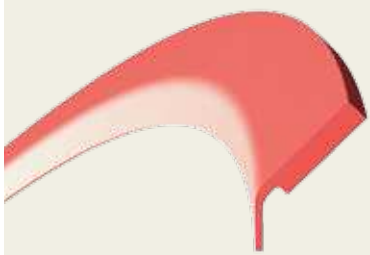

HRE

Fig. 29

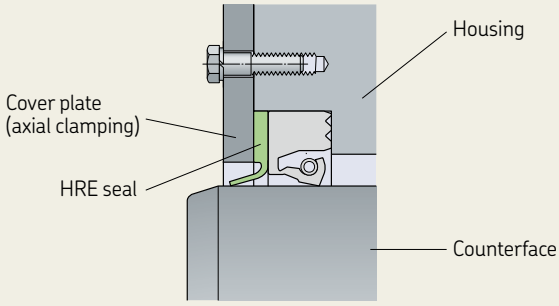

Material and manufacturing

ECOPUR is a thermoplastic polyurethane (TPU) and has outstanding mechanical properties like abrasion resistance against contaminants.

G-ECOPUR and H-ECOPUR are hydrolysis-resistant polyurethanes with similar properties.

The size of the seal will dictate whether G-ECOPUR or H-ECOPUR is used.

G-ECOPUR

Standard seals are made of G-ECOPUR, which is a casted polyurethane elastomer.

This material has outstanding wear resistance and increased stiffness compared to rubber materials (**→ diagram 1**).

Increased stiffness allows for easier handling and minimizes the risk of installation failures like bending the sealing lip or losing the garter spring.

CNC manufacturing process

Featuring proprietary software and high-precision cutting tools, the SKF SEAL JET manufacturing system uses Computer Numerical Control (CNC) technology to machine polymeric seals quickly (**→ page 56**). The system machines a seal from a semi-finished tube of the selected material.

Diagram 1

Abrasion wear of various sealing materials

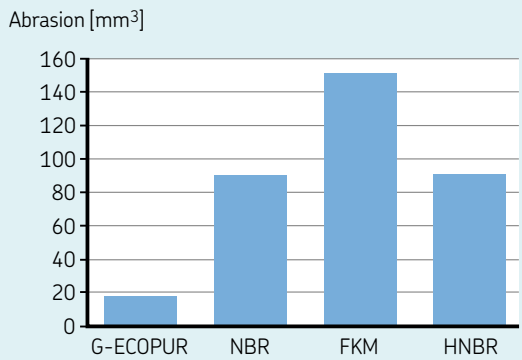

G-ECOPUR is 5 times more abrasion-resistant than the next best performing elastomer material.

Size options of heavy industrial seals

All SKF metal-cased HDS seals, HS seals, HSS and HRS seals are made upon order in any inch or metric size within the ranges listed in **tables 5, 6** and **7**. New seal sizes are manufactured without additional tooling and can be supplied without extended lead times. The product tables starting on **page 203**, list a selection of sizes. For any size that is not listed in the product tables, contact your SKF distributor or SKF sales representative.

Fig. 30

HDS nominal housing dimensions

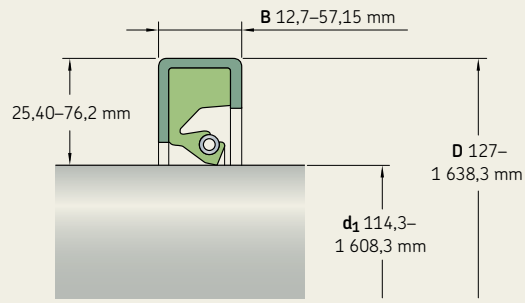

Note: Not all combinations are possible

Table 5

Standard sizes for metal-cased HDS seal designs

Designs with metal outside diameter	Shaft diameter d_1		Bore diameter D		Nominal seal width B		Difference between bore and shaft diameter	
	from	to	from	to	from	to	from	to
–	mm/*in*		mm/*in*		mm/*in*		mm/*in*	
HDS7	114,30 *4.500*	1 608,30 *63.319*	139,70 *5.500*	1 638,30 *64.500*	12,70 *0.500*	31,75 *1.250*	25,40 *1.000*	76,20 *3.000*
HDSH7	114,30 *6.500*	1 608,30 *63.250*	*139,70* *7.750*	*1 638,30* *64.500*	*15,00* *0.787*	*31,75* *1.250*	*25,40* *1.250*	*50,80* *2.500*
HDS1–2, HDSF1–2	114,30 *4.500*	1 608,30 *63.319*	127,00 *7.750*	1 638,30 *64.500*	12,70 *0.625*	31,75 *1.250*	25,40 *1.250*	76,20 *3.000*
HDSH1–2	114,30 *4.500*	1 608,30 *63.319*	127,00 *5.000*	1 638,30 *64.500*	17,07 *0.627*	31,75 *1.250*	25,40 *1.000*	76,20 *3.000*
HDSA1–2	114,30 *4.500*	1 189,20 *46.819*	139,70 *5.500*	1 219,20 *48.000*	17,48 *0.688*	38,10 *1.500*	25,40 *1.000*	76,20 *3.000*
HDSD2, HDSE2	114,30 *4.500*	1 602,97 *63.109*	143,51 *5.650*	1 638,30 *64.500*	28,58 *1.125*	57,15 *2.250*	29,21 *1.150*	76,20 *3.000*
HDSEH1–2	165,10 *6.500*	1 603,50 *63.130*	202,18 *7.960*	1 638,30 *64.500*	39,98 *1.574*	50,80 *2.000*	37,08 *1.460*	76,20 *3.000*

Not all cross sections and widths are possible with every shaft diameter. Contact SKF for information on dimensions at the extreme limits or for sizes outside the standard range.

Fig. 31

HS and HSS nominal housing dimensions

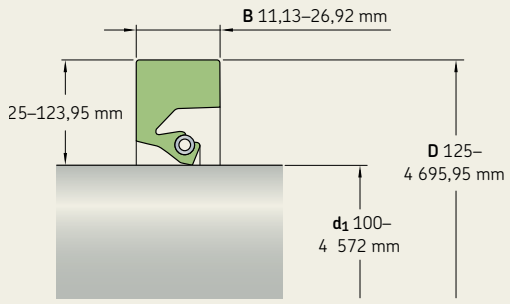

Note: Not all combinations are possible

Fig. 32

HRS nominal housing dimensions

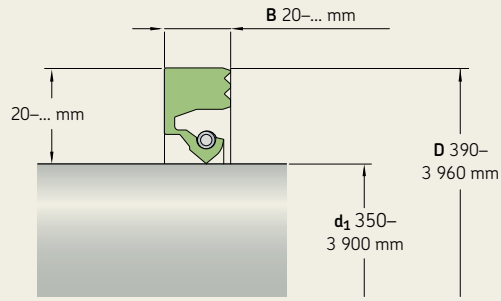

Note: Not all combinations are possible

Table 6

Standard size for all rubber and polyurethane seals

Designs with metal outside diameter	Shaft diameter d_1		Bore diameter D		Nominal seal width B		Difference between bore and shaft diameter	
	from	to	from	to	from	to	from	to
–	mm/*in*		mm/*in*		mm/*in*		mm/*in*	
HS	100 *3,937*	4 572 *180*	125 *4,921*	4 636 *182,52*	11,13 *0,438*	25,4 *1*	25 *0,984*	64 *2,52*
HSS	203,2 *8*	4 572 *180*	*233,2* *9,181*	*4 636* *182,52*	*12,7* *0,5*	*25,4* *1*	*30* *1,181*	*64* *2,52*
HSA7 / HSA8	711,2 *28*	4 572 *180*	753,11 *29,65*	4 695,95 *184,88*	22,86 *0,9*	26,92 *1,06*	41,91 *1,65*	123,95 *4,88*
HRS	350 *13,78*	3 900 *153,543*	390 *15,354*	3 960 *155,906*	20 *0,787*	– –	20 *0,787*	– –
HRE	350 *13,78*	3 900 *153,543*	390 *15,354*	3 960 *155,906*	5 *0,197*	– –	20 *0,787*	– –

Not all cross sections and widths are possible with every shaft diameter. Contact SKF for information on dimensions at the extreme limits or for sizes outside the standard range.

Table 7

Standard size options for HRS seals

Shaft diameter d_1		Bore diameter D		Bore depth B		Difference between bore and shaft diameter	
from	to	from	to	HRS, HRSA	HRS, HRE	min.	min. recommended
mm/*in*		mm/*in*		mm/*in*		mm/*in*	
350 *13.780*	3 900 *153.543*	390 *15.354*	3 960 *155.906*	≥ 20 *0.787*	≥ 25 *0.984*	≥ 20 *0.787*	≥ 25 *0.984*

1) Tolerance h11
2) Tolerance H8
3) Tolerance ±0,13 mm (*0.005 in*)
Not all cross sections and widths are possible with every shaft diameter. Contact SKF for information on dimensions at the extreme limits or on sizes outside the standard range.

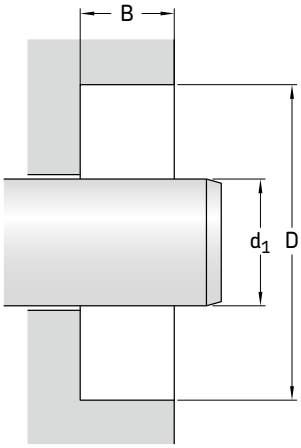

In all listed sizes seals can be configured to application requirements. Not all combinations of sizes and designs are possible, please refer to tables for seal design selection **pages 176** to **183** and size capabilities **page 201** to **202** or contact your SKF representative.

Principal dimensions

d1	D	B	d_1	D	B	d_1	D	B	d_1	D	B
100	130	12,5	**125**	155	14	**145**	185	16	**170**	195	13
105	130	12	**125**	157	12,5	**145**	185	18	**170**	200	12
105	130	13	**125**	160	12	**146**	178	16	**170**	200	15
105	135	12	**125**	160	15	**149**	178	13	**170**	200	16
105	135	13	**125**	165	15	**149**	180	13	**170**	205	16
105	140	12	**125**	165	15,8	**150**	180	12	**170**	210	16
105	143	16	**125**	165	16	**150**	180	13	**170**	210	20
105	145	16	**125**	170	13	**150**	180	14	**170**	211	16
107	147	16	**126**	160	15	**150**	180	15	**170**	220	15
110	135	12,5	**127**	165	16	**150**	180	16	**175**	200	15
110	140	12	**130**	155	12,5	**150**	182	16	**175**	205	15
110	140	13	**130**	155	15,5	**150**	185	18	**175**	213	19
110	140	15	**130**	160	12	**150**	186	20	**175**	215	15
110	140	16	**130**	160	15	**150**	190	15	**175**	215	16
110	142	12	**130**	160	18	**150**	190	16	**178**	210	14
110	143	18	**130**	165	13	**150**	195	16	**179**	219	16
110	145	19	**130**	165	18	**151**	183	13	**180**	205	12
110	150	16	**130**	170	12	**152**	181	12,5	**180**	205	13
110	150,1	16	**130**	170	16	**152**	191	13	**180**	210	12
110	152	15	**133**	165	12,5	**152,5**	183	15	**180**	210	14
113	140	13	**135**	160	12	**155**	180	12,5	**180**	210	15
114	139	15	**135**	161	13	**155**	180	13	**180**	210	16
114	140	13,3	**135**	165	12	**155**	190	13	**180**	210	20
115	140	12	**135**	167	15	**155**	190	15	**180**	215	15
115	140	13	**135**	170	12	**155**	195	16	**180**	215	16
115	145	15	**135**	170	15	**155**	195	18	**180**	215	18
115	150	12	**135**	170	16,5	**156**	185	13	**180**	215	19
115	150	15	**135**	175	16	**156**	200	16	**180**	220	15
115	155	16	**140**	165	12	**160**	185	12,5	**180**	220	16
118	150	15	**140**	168	21	**160**	188	21	**180**	220	20
120	140	12	**140**	170	12	**160**	190	14,3	**180**	222	16
120	145	15,5	**140**	170	14	**160**	190	15	**181**	219	15
120	150	12	**140**	170	15	**160**	190	16	**182**	215	16
120	150	13	**140**	170	16	**160**	190	16,5	**185**	215	15
120	150	14	**140**	175	15	**160**	190	20	**185**	220	12,7
120	150	15	**140**	178	16	**160**	196	20	**185**	225	16
120	150	16	**140**	180	15	**160**	200	15	**185**	225	16,5
120	152	16	**140**	180	16	**160**	200	15,9	**186**	226	16
120	155	18	**140**	180	17	**160**	200	16	**188**	215	16
120	160	12	**145**	170	13	**160**	200	17	**189**	215	16
120	160	15	**145**	174	14	**160**	211	16	**190**	215	16
120	160	16	**145**	175	14	**162**	190	12	**190**	220	13
120	160	18	**145**	175	15	**162**	202	16	**190**	220	15
120	170	16	**145**	180	12	**165**	190	13	**190**	220	16
125	150	12	**145**	180	13	**165**	190	15	**190**	225	15
125	150	13	**145**	180	14	**165**	195	15	**190**	225	16
125	151	17	**145**	180	15	**165**	200	15	**190**	225	18
125	155	12	**145**	180	18	**165**	205	16	**190**	230	15
125	155	12,5	**145**	180	20	**166**	206	16	**190**	230	16

Please use size tables in section *Size options of heavy industrial seals* on ***page 200*** to determine your required seal type and size.

d_1 **190–285** mm

Principal dimensions

d1	D	B
190	230	17
190	230,1	16
190	234	20
190	235	16
190	240	20
195	220	12,7
195	220,4	17,7
195	235	16
195	250	22
197	236	16
200	225	15
200	230	14
200	230	15
200	230	16
200	230,1	15
200	235	15
200	235	16
200	235	18
200	235	19
200	235	20
200	238	19
200	238,1	18
200	238,1	19,1
200	240	15
200	240	16
200	240	17,5
200	240	18
200	240	20
200	250	15
200	250	18
200	255	22
203	241	16
205	230	15
205	245	16
205	245	20
205	250	16
208	233	12,5
210	235	13
210	235	15,8
210	240	12
210	240	14
210	240	15
210	240	16
210	240	18
210	240	20
210	245	16
210	245	16,5
210	245	18
210	245	18,2
210	250	15
210	250	16
210	250	18
210	250	20
210	260	15
210	265	23
210	270	15
210	270	16
215	240	12
215	240	20
215	245	16
215	248	15
215	250	16
215	255	16
215	265	21,5
215	270	23
216	254	16
218,4	250	15
219	250	12
220	250	12
220	250	15
220	250	16
220	250	16,5
220	250	18
220	250	20

d_1	D	B
220	250	22
220	255	16
220	255	18
220	255	18,3
220	260	14,3
220	260	15
220	260	16
220	260	16,5
220	260	18
220	260	19
220	260	20
220	260	22
220	275	23
224	260	16
224	274	20
225	250	15
225	250	16
225	255	15
225	257	16
225	260	20
225	260	22
225	265	16
225	265	20
225	290	16
226	258	16
226	270	16
226	276	22,3
228	268	16
228	268	20
229	267	19
229	270	17
230	260	15
230	260	15,7
230	260	16
230	260	18
230	260	20
230	262	15
230	264	16
230	265	16
230	265	18
230	265	20
230	269	22
230	270	16
230	270	18
230	270	20
230	280	16
230	280	20
230	285	23
230	320	18
235	265	15
235	265	15,3
235	267	15
235	270	15
235	270	16
235	273	19
235	275	16
235	275	20
236	276	16
238	270	16
238	290	25
240	265	13
240	270	12,7
240	270	13,5
240	270	15
240	270	16
240	270	17
240	270	18
240	275	15
240	275	16
240	275	18
240	275,1	18
240	279	22
240	279,9	16
240	280	14

d_1	D	B
240	280	16
240	280	18
240	280	19
240	280	20
240	280	22
240	280	23
240	290	16
240	290	20
240	290	25
240	300	25
241	279	19
244	284	16
245	275	16
245	285	16
245	288	16
245	290	15
248	298	19
250	280	15
250	280	16
250	280	20
250	280	22
250	285	15
250	285	16
250	285	17
250	285	18
250	290	15
250	290	16
250	290	16,5
250	290	18
250	290	20
250	294	20
250	295	24
250	300	20
250	310	25
254	290	15
254	305	21
255	290	16
255	290,1	16
255	295	16
255	299	20
255	315	25
256	300	20
258	290	16
260	285	12,7
260	285	13
260	285,4	12,7
260	290	16
260	290	19
260	290	20
260	295	17
260	298	17
260	300	14
260	300	14,4
260	300	15
260	300	16
260	300	18
260	300	20
260	300	22
260	304	20
260	305	16
260	305	22
260	310	16
260	315	24
260	320	25
261	311	16
264	310	13
264	310	17
264,8	300	20
264,8	304	20
265	295	15
265	300	15
265	300	16
265	303	15
265	303	16

d_1	D	B
265	305	18
265	309	20
265	310	16
265	310	22
266	310	20
267	308	19
267	308	20
267	308	22
267	315	15
270	260	15
270	300	15
270	310	15
270	310	16
270	310	18
270	310	20
270	310	20,5
270	310,3	16
270	314	19
270	314	20
270	314	26
270	320	16
270	330	18
270	330	25
270	335	18
272	304	15,8
272	304	16
273	311	15
273	317	19
275	307	13
275	310	15
275	310	16
275	315	18
275	315	20
275	319	18
275	319	20
275	320	15
275	320	16
278	312	16
279	310	16
279	323	20
280	310	14
280	310	15
280	310	16
280	310	20
280	315	15
280	318	15
280	318,7	27
280	320	16
280	320	17
280	320	18
280	320	19
280	320	19,1
280	320	19,6
280	320	20
280	320	22
280	322	20
280	324	20
280	325	20
280	325	22
280	325	24
280	330	20
280	330	20,6
280	330	24
280	340	15
280	340	20
280	340	25
280	350	16
285	310	13
285	310	16
285	320	16
285	320	20
285	324	20
285	325	16
285	325	18

Please use size tables in section *Size options of heavy industrial seals* on ***page 200*** to determine your required seal type and size.

Principal dimensions

d1	D	B	**d_1**	D	B	**d_1**	D	B	**d_1**	D	B
285	325	20	**310**	355,6	20	**330**	384	18	**356**	432	28
285	329	20	**310**	360	22	**330**	390	18	**360**	390	15,9
286	336,6	15	**310**	370	25	**330**	390	20	**360**	390	18
289	327	19	**311**	345	18	**330**	390	25	**360**	392	15,9
290	320	15	**311**	345	18,3	**331**	371	14	**360**	392	20
290	320	16	**314**	355	20	**331**	371	15	**360**	398	19
290	320	18	**315**	345	14	**331**	371	16	**360**	398	20
290	329,7	16	**315**	345	20	**335**	365	16	**360**	400	5
290	330	16	**315**	347	13	**335**	373	19	**360**	400	17
290	330	18	**315**	355	16	**335**	375	15	**360**	400	18
290	330	20	**315**	355	18	**335**	375	18	**360**	400	20
290	330	20,3	**315**	355	20	**335**	379	20	**360**	400	22
290	334	20	**315**	359	22	**335**	380	20	**360**	400	23
290	334	20,3	**315**	360	20	**335**	395	16	**360**	400	25
290	334	20,5	**315**	364	20	**336**	380	20	**360**	404	5
290	335	24	**315**	365	20	**340**	370	16	**360**	404	16
290	340	20	**316**	360	20	**340**	370	18	**360**	404	17,5
290	350	15	**317**	352	16	**340**	372	16	**360**	404	20
290	350	25	**317**	352	23	**340**	372	18	**360**	405	25
292	336	20	**317**	361	20	**340**	372	20	**360**	410	5
292	350	16	**318**	348	19	**340**	380	15	**360**	410	20
295	325	15	**318**	360	20	**340**	380	16	**360**	410,8	22,3
295	330	16	**320**	350	15	**340**	380	18	**360**	411	22,3
295	330	17,5	**320**	350	15,4	**340**	380	20	**360**	420	15
295	330	18	**320**	350	16	**340**	380	22	**360**	420	25
295	335	16	**320**	350	18	**340**	384	20	**362**	400	16
295	335	18	**320**	350	20	**340**	385	20	**362**	400	20
295	339	20	**320**	355	16	**340**	390	25	**362**	402	18
295	344	20	**320**	358	19	**340**	400	25	**362**	406	5
296	340	20	**320**	358	20	**342**	380	16	**362**	406	19,5
298	338	16	**320**	360	12	**343**	381	21	**362**	406	19,8
298	340	17	**320**	360	15	**345**	384	20	**362**	406	20
300	325,4	12,7	**320**	360	16	**345**	389	20	**362**	406	22
300	330	14	**320**	360	18	**345**	390	25	**362**	412	25
300	330	15	**320**	360	20	**345**	395	20	**363**	418	5
300	332	16	**320**	360	22	**346**	375	15	**363**	418	20
300	335	15	**320**	360	22,2	**348**	380	16	**364**	406	17
300	335	18	**320**	360	25	**349**	395	18	**364**	420	25
300	340	16	**320**	364	20	**350**	380	15	**364,5**	400	20
300	340	16,5	**320**	368,1	19	**350**	380	16	**365**	400	17
300	340	18	**320**	370	25	**350**	380	17,7	**365**	405	5
300	340	20	**320**	380	25	**350**	380	20	**365**	405	18
300	340	22	**323**	363	16	**350**	380	20,5	**365**	405	20
300	340	22,2	**324**	362	17,5	**350**	382	20	**365**	409	5
300	344	16	**324**	365	22	**350**	390	5	**365**	409	20
300	344	20	**325**	360	20	**350**	390	16	**366**	410	5
300	344	22	**325**	363	16	**350**	390	18	**367**	405	18
300	345	22	**325**	365	16	**350**	390	20	**370**	410	5
300	345	25	**325**	365	18	**350**	391	16	**370**	410	15
300	350	24	**325**	365	20	**350**	394	5	**370**	410	16
300	350	25	**325**	368	20	**350**	394	20	**370**	410	18
300	360	20	**325**	369	19,3	**350**	394	20,1	**370**	410	20
300	360	25	**325**	369	20	**350**	394	21	**370**	414	5
300	390	20	**325**	370	20	**350**	394	22	**370**	414	13
300	390	25	**325**	375	22,8	**350**	400	5	**370**	414	16
302	342	16	**325**	375	25	**350**	400	17	**370**	414	19
304	348	20	**328**	372	20,2	**350**	400	25	**370**	414	20
305	345	20	**330**	360	14	**350,6**	395	5	**370**	420	5
305	349	20	**330**	360	18	**351**	390	20	**370**	420	15
305	355	22,5	**330**	365	14	**351**	391	16	**370**	420	20
308	352	20	**330**	370	14	**351**	407	24	**370**	420	25
310	310	16	**330**	370	15	**355**	393	18	**375**	419	5
310	340	15	**330**	370	16	**355**	393	20	**375**	419	20
310	340	20	**330**	370	18	**355**	394	20	**375**	420	16
310	345	18	**330**	370	20	**355**	395	5	**375**	420	18
310	350	16	**330**	370	21	**355**	395	20	**375**	435	25
310	350	18	**330**	370	25	**355**	399	5	**376**	427	5
310	350	20	**330**	374	17	**355**	399	20	**380**	412	16
310	353	20	**330**	374	18	**355**	405	5	**380**	418	19
310	354	19,3	**330**	374	19	**355**	405	20	**380**	419	24
310	354	20	**330**	374	20	**356**	400	5	**380**	419	25
310	354	20,5	**330**	380	19	**356**	400	16	**380**	420	5
310	355	20	**330**	380	20	**356**	400	20	**380**	420	15
310	355	24	**330**	380	22	**356**	432	5	**380**	420	16

Please use size tables in section *Size options of heavy industrial seals* on ***page 200*** to determine your required seal type and size.

d_1 **380–490** mm

Principal dimensions

d1	D	B
380	420	18
380	420	19
380	420	20
380	420	22
380	420	22,2
380	420	25
380	423,9	5
380	424	5
380	424	20
380	425	20
380	429	5
380	429	24
380	430	19
380	430	20
380	430,8	5
380	435	5
380	435	25
380	440	5
380	440	16
380	440	23
380	440	25
384	414	15
385	421	16
385	425	18
385	425	18,3
385	429	5
385	429	20
385	432	15
385	435	5
385	435	22
385	435	25
387	431	5
387	431	22
387	431	22,5
387	438	5
387,4	431	5
388	418	15
390	420	14
390	420	16
390	420	20
390	424,8	13,5
390	430	5
390	430	16
390	430	18
390	430	19
390	430	20
390	434	5
390	434	18
390	434	20
390	434	22
390	435	25
390	450	25
392	432	18
395	430	16
395	430	18
395	430	20
395	439	5
395	439	19
395	439	20
395	439	20,5
399	431	19
400	430	20
400	440	5
400	440	14
400	440	18
400	440	20
400	440	22
400	444	5
400	444	13,5
400	444	20
400	444	22
400	444,5	22
400	447	20
400	450	5

d_1	D	B
400	450	17,5
400	450	18
400	450	18,1
400	450	20
400	450	22
400	450	22,5
400	450	25
400	451	5
400	451	22,2
400	460	5
400	460	25
405	449	5
405	449	20
405	455	5
405	455	22
405	455,6	5
410	350	18
410	440	16
410	450	5
410	450	17,5
410	450	18
410	450	20
410	454	5
410	454	19
410	454	20
410	460	5
410	460	22
410	460	25
410	470	16
410	470	25
413	463	5
413	463	22
415	465	5
415	465	20
415	465	22
415	465	25
416	466	5
416	466	21,5
418	455	16
419	451	19
420	460	5
420	460	15
420	460	17
420	460	18
420	460	20
420	460	22,2
420	464	5
420	464	20
420	470	5
420	470	20
420	470	22
420	470	23
420	470	25
420	480	5
420	480	24
420	480	25
425	465	20
425	475	5
425	475	25
425	480	22
425	483	5
425	483	23
430	460	15
430	468	22
430	470	20
430	474	5
430	474	20
430	480	5
430	480	16
430	480	18
430	480	20
430	480	21,5
430	480	22
430	480	25

d_1	D	B
430	480	27,5
430	480	30
430	490	25
431	488	19
432	463	17
432	470	21,5
432	470	22
435	475	20
435	485	5
435	485	18
435	485	22
435	485	22,6
435	485	23
438	476	24
440	470	20
440	472	16
440	472	20
440	480	5
440	480	20
440	480	21
440	480	22,2
440	480	26
440	484	20
440	484,3	19
440	490	5
440	490	20
440	490	20,5
440	490	22
440	490	25
440	490	28
442	472	20
445	485	18
445	485	20
445	495	5
445	495	22
446	486	16
446	486	16,5
446	496	22
448	480	16
449	500	5
449	500	23
450	480	17,5
450	480	20
450	490	18
450	490	20
450	490	22
450	494	5
450	494	20
450	500	5
450	500	18
450	500	20
450	500	22
450	500	22,4
450	500	23
450	500	24
450	500	25
450	510	25
452	496	15
452	503	20,7
454	500	18
454	504	5
454	504	21
455	505	5
455	505	21,8
455	505	22
455	505	25
457	508	5
458	494	18
458	505	20,6
460	500	5
460	500	16
460	500	18
460	500	20
460	500	22

d_1	D	B
460	500	23
460	504	20
460	510	5
460	510	20
460	510	20,6
460	510	21
460	510	21,5
460	510	22
460	510	25
460	520	20
460	520	25
461	495	20
461,5	540	5
461,5	540	31
463	528	20
465	495	20
465	510	20
465	510	22
465	520	22
467	510	5
467	510	20
467	510	25
467,1	510	5
468	530	20
470	508	19
470	510	5
470	510	18
470	510	20
470	510	22
470	520	5
470	520	20
470	520	20,7
470	520	22
470	520	24
470	520	25
470	530	5
470	530	20
470	530	25
470	530	30
474	514	5
474	514	20
475	505	17
475	525	5
475	525	22
475	525	25
475	525,8	5
475	530	18
475,8	520	5
475,8	520	22
480	450	20
480	514	15
480	520	5
480	520	18
480	520	20
480	520	22
480	524	5
480	524	20
480	530	5
480	530	18
480	530	20
480	530	22
480	530	25
480	540	20
480	540	25
480	550	5
480	550	25
485	530	20
485	535	5
485	535	19
485	535	20
485	535	22
490	530	5
490	530	20
490	530	20,5

Please use size tables in section *Size options of heavy industrial seals* on ***page 200*** to determine your required seal type and size.

Principal dimensions

d1	D	B	d_1	D	B	d_1	D	B	d_1	D	B
490	540	5	**520**	560	18	**550**	600	20	**590**	640	5
490	540	22	**520**	560	20	**550**	600	22	**590**	640	20
490	540	25	**520**	564	5	**550**	600	22,3	**590**	640	22
490	541	21	**520**	564	20	**550**	600	23,5	**590**	640	22,8
493	543	5	**520**	570	5	**550**	600	25	**590**	640	25
493	543	26	**520**	570	18	**550**	610	5	**600**	640	5
495	545	5	**520**	570	22	**550**	610	25	**600**	640	18
495	545	22	**520**	570	22,6	**550**	620	25	**600**	640	20
495	560	25	**520**	570	24	**550**	660	23,5	**600**	640	25
495,5	546	5	**520**	570	25	**555**	605	5	**600**	649,2	5
495,5	546	22	**520**	580	20	**555**	605	22	**600**	650	5
497	540	5	**520**	580	25	**556**	610	25	**600**	650	18
497	540	20	**524**	574	25	**559**	597	19	**600**	650	22
500	540	5	**525**	555	18	**560**	590	20	**600**	650	25
500	540	16	**525**	569	5	**560**	600	5	**600**	660	5
500	540	20	**525**	569	20	**560**	600	18	**600**	660	18
500	540	22	**525**	575	5	**560**	600	20	**600**	660	25
500	544	5	**525**	575	20	**560**	603	5	**600**	660	30
500	544	20	**525**	575	22	**560**	603	20	**600**	664	5
500	544	22	**525**	575	25	**560**	604	5	**600**	664	25
500	544,5	5	**528**	578	5	**560**	604	16	**604**	640	22
500	545	5	**528**	578	22	**560**	604	20	**605**	640	20
500	545	20	**530**	570	20	**560**	610	5	**605**	645	18
500	545	20,5	**530**	570	22	**560**	610	20	**605**	655	5
500	550	5	**530**	574	20	**560**	610	22	**605**	655	20
500	550	18	**530**	575	20	**560**	610	22,3	**605**	655	22
500	550	19	**530**	576	21	**560**	610	25	**610**	620	20
500	550	20	**530**	580	5	**560**	610	26	**610**	650	20
500	550	22	**530**	580	20	**560**	620	25	**610**	650	22,5
500	550	24,5	**530**	580	20,6	**565**	601	20	**610**	650	25
500	550	25	**530**	580	22	**565**	615	5	**610**	654	20
500	550,8	5	**530**	580	22,3	**565**	615	22	**610**	660	5
500	558,8	5	**530**	580	24,2	**565,2**	616	5	**610**	660	20
500	558,8	22	**530**	580	24,5	**569,9**	619,1	5	**610**	660	22
500	560	5	**530**	580	25	**570**	604	15	**610**	660	25
500	560	18	**530**	580,8	5	**570**	610	18	**610**	674	5
500	560	25	**530**	580,8	21	**570**	610	20	**610**	674	22
500	564	5	**530**	590	5	**570**	616	19	**610**	674	25
500	564	25	**530**	590	38	**570**	620	5	**614**	658	5
502	542	5	**530**	620	5	**570**	620	20	**614**	658	20
502	542	20	**530**	620	22	**570**	620	22	**615**	645	20
503	552	5	**534**	584	5	**570**	620	25	**615**	665	5
503	552	20	**534**	584	22	**574**	610	16	**615**	665	20,5
503	553	5	**535**	580	20	**575**	619	5	**615**	665	24
503	553	22	**535**	585	5	**575**	619	20	**615**	665	24,5
505	535	15	**535**	585	22	**575**	625	5	**616**	666,8	5
505	555	20,6	**535**	585	27	**575**	625	22	**616**	666,8	22
508	558,8	5	**538**	570	20	**580**	550	20	**616**	679,8	5
508	559	19	**538**	590	20	**580**	610	20	**616**	679,8	25
508	560	25	**540**	570	20	**580**	615	20	**616**	680	5
508	565	22,5	**540**	580	20	**580**	616	16	**616**	680	25
510	520	20	**540**	584	5	**580**	616	17	**620**	660	20
510	548	24	**540**	584	20	**580**	620	5	**620**	670	5
510	548	25	**540**	585	18	**580**	620	20	**620**	670	20
510	550	5	**540**	590	5	**580**	620	25	**620**	670	22
510	550	17,5	**540**	590	18	**580**	630	5	**620**	680	20
510	550	20	**540**	590	20	**580**	630	18	**620**	684	5
510	554	5	**540**	590	22	**580**	630	22	**620**	684	25
510	554	19,5	**540**	590	22,6	**580**	630	25	**625**	655	20
510	554	20	**540**	590	25	**580**	640	16	**625**	665	25
510	560	5	**540**	590	27,5	**580**	640	25	**625**	670	5
510	560	22	**540**	590	30	**580**	650	25	**625**	670	20
510	560	22,5	**540**	600	20	**585**	620	20	**625**	675	25
510	560	25	**542**	578	16	**585**	635	5	**625**	675,8	19
511	561	22	**542**	578	18	**585**	635	22	**625**	676	19
513	543	16	**545**	595	5	**586**	646	5	**625**	689	5
515	555	5	**545**	595	22	**586**	646	22	**625**	689	25
515	555	20	**548**	610	25	**586**	650	25	**630**	660	15
515	565	5	**549**	600,8	5	**587**	637	5	**630**	660	25
515	565	22	**549,3**	600,1	5	**587**	637	22	**630**	670	20
515	565	25	**550**	590	5	**588**	638	5	**630**	674	20
519	560	21	**550**	590	20	**588**	638	23	**630**	680	5
519	560	25	**550**	600	5	**590**	630	20	**630**	680	22
520	560	5	**550**	600	19	**590**	630	22	**630**	680	25

Please use size tables in section *Size options of heavy industrial seals* on ***page 200*** to determine your required seal type and size.

d_1 **630–800** mm

Principal dimensions

d1	D	B
630	690	5
630	690	20
630	690	25
630	690	30
630	694	5
630	694	25
635	685	5
635	685	22
635	699	5
635	699	25
635	705	5
635	705	30
636	692	5
636	692	30,5
638	678	20
640	680	5
640	680	20
640	680	25
640	684	5
640	684	20
640	688	5
640	688	20
640	690	5
640	690	22
640	690	25
640	700	25
640	704	5
640	704	25
641	707	5
641	707	25
645	695	5
645	695	22
645	700	22
647	700	25
648	690	20
650	680	15
650	686	20
650	690	5
650	690	18
650	690	20
650	690	22
650	690	25
650	700	5
650	700	20
650	700	22
650	700	25
650	710	25
650	714	5
650	714	25
655	690	20
658	703	25
658	716	25
660	650	20
660	690	18
660	700	5
660	700	15
660	700	18
660	700	20
660	700	25
660	704	5
660	704	18
660	704	20
660	710	5
660	710	22
660	710	25
660	716	25
660	720	22
660	724	5
660	724	25
664	715	25
665	715	5
665	715	22
665	729	5
665	729	25

d_1	D	B
668	706	25
670	704	15
670	710	5
670	710	18
670	710	20
670	714	5
670	714	20
670	714	22
670	720	24
670	720	25
670	730	25
670	734	5
670	734	22
670	734	25
672	737	5
672	737	25
676	740	5
676	740	22
676	740	25
676	740	28
679,5	743	5
679,5	743	25
680	700	20
680	720	5
680	720	20
680	730	5
680	730	20
680	730	22
680	730	25
680	744	5
680	744	25
680	780	5
680	780	20
685	720	20
685	735	5
685	735	22
685	737	5
685	737	22
685	749	5
685	749	25
686	740	5
686	740	25
690	730	20
690	734	20
690	740	5
690	740	22
690	740	25
690	754	5
690	754	25
692	732	15
700	740	20
700	750	5
700	750	20
700	750	25
700	760	5
700	760	25
700	760	30
700	764	5
700	764	20
700	764	25
700	765	25
710	750	20
710	750	23
710	760	5
710	760	20
710	760	22
710	760	22,2
710	760	24,9
710	760	25
710	770	5
710	770	25
710	770	30
710	774	5
710	774	22

d_1	D	B
710	774	25
710	774	30
711	775	5
711	775	25
712	757	20,5
715	779	25
716	780	5
716	780	25
720	760	18
720	770	25
720	771,1	21
720	780	5
720	780	25
720	784	5
720	784	23
720	784	25
724	775	5
724	775	22
725	775	25
725	789,2	25
730	770	5
730	770	20
730	780	5
730	780	20
730	780	22
730	780	25
730	790	25
730	794	5
730	794	25
735	795	25
735	799	5
735	799	25
736	800	5
736	800	25
737	790	16
740	780	5
740	780	16,5
740	780	18
740	780	25
740	782	18
740	785	18
740	790	16
740	790	20
740	790	25
740	804	5
740	804	25
744	808	5
744	808	25
744	808	30
748	812	5
748	812	25
750	780	18
750	790	5
750	790	20
750	790	23
750	800	5
750	800	22
750	800	25
750	800	27,5
750	800	28
750	810	5
750	810	22
750	810	25
750	810	30
750	810	36
750	814	5
750	814	25
750	814	28
750	840	5
750	840	25
750,1	810	5
760	800	5
760	800	20
760	800	20,6

d_1	D	B
760	804	5
760	804	20
760	810	20,6
760	810	25
760	813	22
760	820	5
760	820	18
760	820	25
760	820	30
760	824	22
760	824	25
760	830	5
760	830	30
762	791	13
762	812,8	5
762	825,5	5
770	810	20
770	834	5
770	834	20
770	834	25
775	825	5
775	825	25
775	839	5
775	839	25
775	839	31
776	820	5
776	820	20
778	818	20,5
780	820	18
780	820	19
780	820	20
780	830	5
780	830	22
780	830	25
780	830	27,5
780	844	5
780	844	20
780	844	25
786	836	5
786	836	25
790	830	5
790	830	23
790	834	5
790	834	25
790	840	5
790	840	20
790	840	22
790	840	25
790	845	5
790	845	25
790	850	5
790	850	25
790	850	30
790	854	5
790	854	25
799	860	5
799	860	26
800	840	5
800	840	16
800	840	18
800	840	20
800	840	25
800	850	20
800	850	25
800	860	5
800	860	16
800	860	25
800	860	30
800	864	5
800	864	23
800	864	25
800	865	5
800	865	25
800	870	5

Please use size tables in section *Size options of heavy industrial seals* on ***page 200*** to determine your required seal type and size.

Principal dimensions

d1	D	B	d_1	D	B	d_1	D	B	d_1	D	B
800	870	25	**850**	924	25	**920**	984	25	**1 000**	1 035	20
800	870	30	**850**	925	25	**925**	975	22	**1 000**	1 050	20
800	874	5	**853**	917	20	**927**	978	22	**1 000**	1 050	23
800	874	25	**853**	917	22,1	**930**	980	5	**1 000**	1 050	25
805	869	5	**853**	917	25	**930**	980	20	**1 000**	1 060	5
805	869	25	**860**	900	20	**930**	980	22,2	**1 000**	1 060	20
810	850	17	**860**	920	5	**930**	980	25	**1 000**	1 060	25
810	850	20	**860**	920	22	**930**	990	5	**1 000**	1 060	30
810	854	5	**860**	920	25	**930**	990	25	**1 000**	1 064	5
810	854	20	**860**	924	5	**930**	994	5	**1 000**	1 064	25
810	860	5	**860**	924	16	**930**	994	25	**1 020**	1 070	20
810	860	21	**860**	924	25	**930**	1 000	5	**1 020**	1 070	25
810	860	25	**860**	950	5	**930**	1 000	30	**1 020**	1 080	5
810	870	5	**860**	950	32	**934**	984	5	**1 020**	1 080	20,5
810	870	25	**864**	928	5	**934**	984	22	**1 020**	1 080	25
810	874	5	**864**	928	25	**934**	984	25	**1 020**	1 084	5
810	874	22	**865**	911	18	**939**	971	22,2	**1 020**	1 084	25
810	874	23	**867**	920	16	**940**	995	5	**1 026**	1 066	20
810	874	25	**870**	910	20	**940**	995	25	**1 026**	1 076	25
815	865	5	**870**	920	5	**940**	1 000	25	**1 040**	1 100	5
815	865	25	**870**	920	16	**940**	1 004	5	**1 040**	1 100	20
816	866,8	5	**870**	920	20	**940**	1 004	25	**1 040**	1 100	25
820	860	16	**870**	920	25	**950**	980	18	**1 040**	1 104	5
820	860	18	**870**	930	25	**950**	990	18	**1 040**	1 104	25
820	860	20	**870**	934	5	**950**	990	20	**1 050**	1 090	20
820	870	5	**870**	934	24	**950**	1 000	5	**1 050**	1 114	5
820	870	22	**870**	934	25	**950**	1 000	25	**1 050**	1 114	25
820	870	25	**870**	935	23	**950**	1 006	20	**1 054**	1 105	20
820	884	5	**880**	940	5	**950**	1 010	5	**1 055**	1 100	25
820	884	25	**880**	940	25	**950**	1 010	25	**1 055**	1 119	5
820	884	28	**880**	940	30	**950**	1 010	30	**1 055**	1 119	25
825	860	20	**880**	944	5	**950**	1 014	5	**1 056**	1 120	5
825	875	5	**880**	944	22	**950**	1 014	25	**1 056**	1 120	25
825	875	22	**880**	944	25	**953**	1 003	5	**1 060**	1 100	20
825	875	25	**880**	944	25,6	**953**	1 003	22	**1 060**	1 110	5
825,5	877	20	**885**	919	15	**953**	1 003	25	**1 060**	1 110	20
826	876	5	**890**	930	18	**954**	1 004	5	**1 060**	1 110	25
826	876	30	**890**	930	20	**954**	1 004	22	**1 060**	1 120	5
830	874	20	**890**	930	23	**954**	1 004	25	**1 060**	1 120	30
830	890	5	**890**	940	5	**955**	1 019	5	**1 060**	1 124	5
830	890	23	**890**	940	25	**955**	1 019	25	**1 060**	1 124	25
830	894	5	**890**	954	5	**960**	1 000	20	**1 070**	1 120	20
830	894	22	**890**	954	22	**960**	1 000	25	**1 070**	1 125	25
830	894	25	**890**	954	25	**960**	1 020	25	**1 070**	1 140	25
835	899	5	**893**	925	20	**960**	1 024	5	**1 073**	1 104	15
835	899	25	**900**	940	5	**960**	1 024	25	**1 080**	1 130	20
836	896	5	**900**	940	20	**960**	1 040	23	**1 080**	1 140	5
836	896	30	**900**	950	25	**965**	1 015	5	**1 080**	1 140	25
837	889	22,2	**900**	960	5	**965**	1 015	22	**1 080**	1 145	25
838	880	5	**900**	960	25	**965**	1 015	25	**1 090**	1 150	5
838	880	20	**900**	960	27	**970**	1 020	5	**1 090**	1 150	30
840	880	18	**900**	960	30	**970**	1 020	22	**1 100**	1 140	20
840	880	23	**900**	964	5	**970**	1 020	25	**1 105**	1 154	25
840	890	25	**900**	964	25	**970**	1 030	5	**1 105**	1 155	5
840	892	18	**900**	964	32	**970**	1 030	21,5	**1 105**	1 155	22
840	900	25	**900**	980	5	**970**	1 030	22	**1 105**	1 155	25
840	904	5	**900**	980	23	**970**	1 030	25	**1 105**	1 160	5
840	904	25	**910**	950	25	**970**	1 034	5	**1 105**	1 160	22
840	910	25	**910**	960	5	**970**	1 034	25	**1 105**	1 160	25
850	890	5	**910**	960	25	**975**	1 034	25	**1 105**	1 169	25
850	890	20	**910**	966	17,9	**978**	1 018	18	**1 110**	1 160	5
850	900	5	**910**	966	18	**980**	1 030	5	**1 110**	1 160	22
850	900	19	**910**	967	17,9	**980**	1 030	30	**1 110**	1 160	25
850	900	20	**910**	974	5	**985**	1 045	5	**1 110**	1 174	5
850	900	22	**910**	974	22	**985**	1 045	25	**1 110**	1 174	25
850	904	5	**910**	974	25	**990**	1 030	20	**1 120**	1 160	20
850	904	25	**920**	958	19	**990**	1 040	5	**1 120**	1 184	5
850	910	5	**920**	970	5	**990**	1 040	22	**1 120**	1 184	25
850	910	22	**920**	970	20	**990**	1 040	25	**1 130**	1 194	5
850	910	25	**920**	970	25	**990**	1 045	25	**1 130**	1 194	25
850	910	30	**920**	980	5	**990**	1 054	5	**1 135**	1 198	25
850	914	5	**920**	980	25	**990**	1 054	25	**1 140**	1 180	20
850	914	25	**920**	980	30	**992**	1 037	25	**1 140**	1 190	5
850	924	5	**920**	984	5	**995**	1 025	15	**1 140**	1 190	25

Please use size tables in section *Size options of heavy industrial seals* on ***page 200*** to determine your required seal type and size.

d_1 **1 140–5 220** mm

Principal dimensions

d1	D	B
1 140	1 210	25
1 150	1 200	18
1 160	1 200	18
1 160	1 200	20
1 166	1 230	5
1 166	1 230	25
1 175	1 239	5
1 175	1 239	25
1 178	1 242	5
1 178	1 242	25
1 178	1 245	25
1 180	1 230	20
1 180	1 244	25
1 184	1 248	25
1 200	1 250	5
1 200	1 250	22
1 200	1 250	25
1 200	1 264	5
1 200	1 264	22,2
1 200	1 264	25
1 220	1 255	20
1 220	1 284	5
1 220	1 284	25
1 238	1 338	25
1 248	1 298	21
1 250	1 300	5
1 250	1 300	20
1 250	1300	25
1 250	1 314	5
1 250	1 314	21,5
1 250	1 314	25
1 260	1 300	18
1 270	1 320	25
1 280	1 340	25
1 280	1 344	5
1 280	1 344	25
1 285	1 350	5
1 285	1 350	25
1 305	1 355	5
1 305	1 355	25
1 310	1 374	5
1 310	1 374	25
1 320	1 370	5
1 320	1 370	20
1 320	1 370	25
1 320	1 384	5
1 320	1 384	25
1 330	1 380	5
1 330	1 380	25
1 330	1 394	5
1 330	1 394	25
1 336	1 400	5
1 336	1 400	25
1 350	1 415	25
1 356	1 420	5
1 356	1 420	25
1 360	1 400	18
1 370	1 420	19
1 370	1 420	19,8
1 370	1 420	20
1 375	1 425	19,8
1 380	1 420	18
1 380	1 440	25
1 380	1 445	25
1 380	1 458	5
1 380	1 458	32
1 385	1 435	5
1 385	1 435	25
1 400	1 464	5
1 400	1 464	20
1 400	1 464	25
1 400	1 464	35
1 410	1 470	5
1 410	1 470	30

d_1	D	B
1 415	1 479	5
1 415	1 479	25
1 435	1 499	5
1 435	1 499	25
1 437	1 505	5
1 437	1 505	25
1 475	1 598	25
1 480	1 544	5
1 480	1 544	25
1 530	1 580	20
1 540	1 580	20
1 540	1 590	5
1 540	1 590	22
1 540	1 590	25
1 550	1 610	25
1 550	1 614	5
1 550	1 614	25
1 556	1 620	5
1 556	1 620	25
1 560	1 624	5
1 560	1 624	25
1 566	1 616	17,5
1 580	1 644	25
1 587,5	1 625,8	22,2
1 600	1 664	5
1 600	1 664	25,3
1 610	1 660	5
1 610	1 660	20
1 610	1 660	25
1 610	1 670	5
1 610	1 670	20
1 610	1 670	25
1 620	1 684	5
1 620	1 684	25
1 625	1 675	5
1 625	1 675	25
1 650	1 700	5
1 650	1 700	20
1 650	1 700	25
1 656	1 720	5
1 656	1 720	25
1 660	1 708	17,5
1 675	1 725	20
1 675	1 725	20,6
1 710	1 770	5
1 710	1 770	25
1 750	1 810	25
1 760	1 824	25
1 810	1 860	20
1 810	1 860	20,6
1 835	1 891	5
1 835	1 891	25
1 835	1 899	25
1 890	1 950	5
1 890	1 950	25
1 908	1 958	21
1 910	1 974	25
1 958	2 016	5
1 958	2 016	30
2 000	2 050	20
2 000	2 056	5
2 000	2 056	25
2 016	2 080	5
2 016	2 080	25
2 047	2 105	5
2 047	2 105	30
2 080	2 144	5
2 080	2 144	25
2 130	2 194	25
2 130,5	2 194	5
2 130,5	2 194	25
2 140	2 204	5
2 140	2 204	25
2 160	2 220	5

d_1	D	B
2 160	2 220	25
2 197	2 257	24
2 204	2 264	24
2 247	2 300	5
2 247	2 300	25
2 247,8	2 300	5
2 248	2 300	25
2 320	2 384	25
2 340	2 404	25
2 350	2 414	5
2 350	2 414	25
2 422	2 486	5
2 422	2 486	25
2 470	2 534	25
2 480	2 544	5
2 480	2 544	35
2 680	2 740	5
2 680	2 740	30
2 680	2 744	5
2 680	2 744	25
2 850	2 900	20,6
2 900	2 959	17,3
2 917	2 985	5
2 917	2 985	25
2 920	2 955	25
2 920	2 985	5
2 920	2 985	25
2 925	2 985	5
2 925	2 985	25
3 000	3 050	20,6
3 060	3 110	20
3 170	3 234	5
3 170	3 234	25
3 170	3 234	35
3 560	3 680	25
3 572	3 636	25
3 820	3 890	5
3 820	3 890	35
4 760	4 883	25
4 800	4 860	25
4 800	4 920	25
5 220	5 340	25

Please use size tables in section *Size options of heavy industrial seals* on ***page 200*** to determine your required seal type and size.

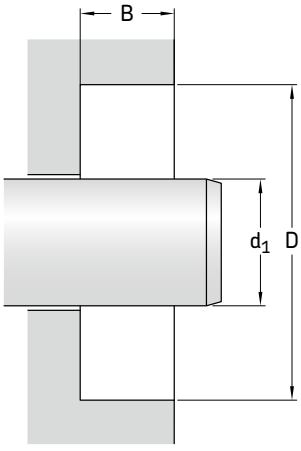

In all listed sizes seals can be configured to application requirements. Not all combinations of sizes and designs are possible, please refer to tables for seal design selection **pages 176** to **183** and size capabilities **page 201** to **202** or contact your SKF representative.

Principal dimensions

d1	D	B	d_1	D	B	d_1	D	B	d_1	D	B
4	5	0.438	**4.063**	5.5	0.5	**4.188**	5.875	0.625	**4.313**	5.75	0.5
4	5	0.469	**4.063**	5.5	0.563	**4.188**	6	0.5	**4.313**	5.75	0.563
4	5	0.5	**4.063**	5.875	0.5	**4.188**	6	0.906	**4.313**	5.75	0.625
4	5	0.625	**4.063**	6	0.906	**4.188**	6.125	0.5	**4.313**	6	0.5
4	5	0.719	**4.125**	5.125	0.5	**4.219**	5.281	0.5	**4.313**	6.25	0.5
4	5	0.75	**4.125**	5.125	0.625	**4.25**	5.25	0.5	**4.328**	5.5	0.438
4	5	0.906	**4.125**	5.125	0.719	**4.25**	5.25	0.563	**4.375**	5.375	0.5
4	5.016	0.5	**4.125**	5.125	0.75	**4.25**	5.25	0.625	**4.375**	5.375	0.625
4	5.031	0.5	**4.125**	5.125	0.906	**4.25**	5.25	0.75	**4.375**	5.375	0.688
4	5.125	0.438	**4.125**	5.188	0.5	**4.25**	5.25	0.781	**4.375**	5.375	0.719
4	5.125	0.5	**4.125**	5.25	0.5	**4.25**	5.25	0.906	**4.375**	5.375	0.75
4	5.125	0.563	**4.125**	5.25	0.563	**4.25**	5.375	0.5	**4.375**	5.375	0.906
4	5.125	0.625	**4.125**	5.25	0.625	**4.25**	5.375	0.563	**4.375**	5.5	0.5
4	5.125	0.906	**4.125**	5.25	0.75	**4.25**	5.375	0.625	**4.375**	5.5	0.563
4	5.125	0.969	**4.125**	5.25	0.906	**4.25**	5.375	0.75	**4.375**	5.5	0.625
4	5.25	0.438	**4.125**	5.281	0.5	**4.25**	5.375	0.906	**4.375**	5.5	0.75
4	5.25	0.469	**4.125**	5.375	0.5	**4.25**	5.438	0.375	**4.375**	5.5	0.969
4	5.25	0.5	**4.125**	5.375	0.625	**4.25**	5.438	0.5	**4.375**	5.563	0.5
4	5.25	0.563	**4.125**	5.375	0.75	**4.25**	5.5	0.5	**4.375**	5.625	0.5
4	5.25	0.625	**4.125**	5.375	0.906	**4.25**	5.5	0.563	**4.375**	5.75	0.5
4	5.25	0.75	**4.125**	5.5	0.438	**4.25**	5.5	0.625	**4.375**	5.813	0.5
4	5.25	0.906	**4.125**	5.5	0.5	**4.25**	5.5	0.75	**4.375**	5.828	0.484
4	5.266	0.5	**4.125**	5.5	0.563	**4.25**	5.625	0.5	**4.375**	5.875	0.5
4	5.375	0.5	**4.125**	5.5	0.969	**4.25**	5.625	0.625	**4.375**	6	0.5
4	5.375	0.625	**4.125**	5.625	0.5	**4.25**	5.688	0.5	**4.375**	6	0.563
4	5.375	0.75	**4.125**	5.625	0.625	**4.25**	5.703	0.484	**4.375**	6	0.75
4	5.5	0.438	**4.125**	5.75	0.625	**4.25**	5.75	0.5	**4.375**	6.125	0.5
4	5.5	0.5	**4.125**	5.875	0.5	**4.25**	5.75	0.563	**4.375**	6.25	0.5
4	5.5	0.563	**4.125**	6	0.5	**4.25**	5.75	0.625	**4.375**	6.25	0.563
4	5.5	0.625	**4.156**	5.406	0.5	**4.25**	5.75	0.906	**4.406**	5.5	0.5
4	5.5	0.719	**4.188**	5.188	0.5	**4.25**	5.875	0.625	**4.438**	5.438	0.5
4	5.5	0.75	**4.188**	5.188	0.625	**4.25**	6	0.5	**4.438**	5.438	0.75
4	5.625	0.5	**4.188**	5.188	0.75	**4.25**	6.125	0.5	**4.438**	5.5	0.5
4	5.626	0.5	**4.188**	5.25	0.469	**4.25**	6.25	0.5	**4.438**	5.5	0.563
4	5.75	0.5	**4.188**	5.25	0.5	**4.25**	6.25	0.563	**4.438**	5.5	0.625
4	5.75	0.563	**4.188**	5.25	0.625	**4.313**	5.313	0.438	**4.438**	5.5	0.75
4	5.75	0.781	**4.188**	5.25	0.75	**4.313**	5.313	0.5	**4.438**	5.5	0.906
4	5.875	0.5	**4.188**	5.25	0.969	**4.313**	5.313	0.625	**4.438**	5.563	0.5
4	6	0.5	**4.188**	5.313	0.5	**4.313**	5.313	0.75	**4.438**	5.563	0.75
4	6	0.906	**4.188**	5.313	0.563	**4.313**	5.375	0.5	**4.438**	5.625	0.5
4.016	5.234	0.625	**4.188**	5.375	0.5	**4.313**	5.438	0.5	**4.438**	5.625	0.625
4.016	5.438	0.5	**4.188**	5.375	0.625	**4.313**	5.5	0.438	**4.438**	5.688	0.5
4.063	5.063	0.5	**4.188**	5.438	0.5	**4.313**	5.5	0.5	**4.438**	5.688	0.625
4.063	5.063	0.75	**4.188**	5.5	0.5	**4.313**	5.5	0.625	**4.438**	5.75	0.5
4.063	5.125	0.469	**4.188**	5.5	0.563	**4.313**	5.5	0.75	**4.438**	5.75	0.563
4.063	5.125	0.5	**4.188**	5.5	0.625	**4.313**	5.5	0.969	**4.438**	5.75	0.625
4.063	5.125	0.75	**4.188**	5.625	0.5	**4.313**	5.563	0.5	**4.438**	5.75	0.719
4.063	5.25	0.5	**4.188**	5.75	0.5	**4.313**	5.625	0.5	**4.438**	5.813	0.5
4.063	5.313	0.5	**4.188**	5.875	0.5	**4.313**	5.688	0.75	**4.438**	5.875	0.5

Please use size tables in section *Size options of heavy industrial seals* on ***page 200*** to determine your required seal type and size.

d_1 **4.438–5.297** in

Principal dimensions

d1	D	B
4.438	5.891	0.484
4.438	5.891	0.625
4.438	5.937	0.5
4.438	5.938	0.625
4.438	6	0.5
4.438	6	0.563
4.438	6	0.594
4.438	6.125	0.5
4.438	6.203	0.828
4.438	6.25	0.5
4.438	6.25	0.563
4.5	5.5	0.375
4.5	5.5	0.5
4.5	5.5	0.531
4.5	5.5	0.563
4.5	5.5	0.625
4.5	5.5	0.719
4.5	5.5	0.75
4.5	5.5	0.906
4.5	5.5	0.969
4.5	5.625	0.5
4.5	5.625	0.563
4.5	5.625	0.625
4.5	5.625	0.719
4.5	5.688	0.5
4.5	5.688	0.625
4.5	5.75	0.5
4.5	5.75	0.563
4.5	5.75	0.625
4.5	5.75	0.75
4.5	5.75	0.969
4.5	5.813	0.578
4.5	5.875	0.5
4.5	5.938	0.5
4.5	5.984	0.625
4.5	6	0.5
4.5	6	0.563
4.5	6	0.625
4.5	6	0.75
4.5	6	0.906
4.5	6.125	0.5
4.5	6.25	0.5
4.5	6.25	0.625
4.5	6.25	0.969
4.5	6.375	0.5
4.5	6.375	0.625
4.5	6.5	0.5
4.516	5.516	0.75
4.531	5.531	0.5
4.563	5.563	0.625
4.563	5.563	0.75
4.563	5.625	0.5
4.563	5.688	0.5
4.563	5.75	0.5
4.563	5.75	0.563
4.563	5.75	0.625
4.563	5.813	0.5
4.563	5.875	0.5
4.563	5.875	0.563
4.563	6	0.5
4.563	6.063	0.5
4.563	6.125	0.5
4.563	6.25	0.5
4.563	6.375	0.5
4.625	5.625	0.5
4.625	5.625	0.563
4.625	5.625	0.625
4.625	5.625	0.75
4.625	5.75	0.5
4.625	5.75	0.563
4.625	5.75	0.906
4.625	5.875	0.5
4.625	6	0.5
4.625	6	0.625

d_1	D	B
4.625	6	0.719
4.625	6	0.969
4.625	6.078	0.484
4.625	6.094	0.5
4.625	6.125	0.5
4.625	6.125	0.563
4.625	6.25	0.5
4.641	5.641	0.75
4.656	6.031	0.5
4.688	5.688	0.5
4.688	5.688	0.75
4.688	5.75	0.5
4.688	5.75	0.563
4.688	5.75	0.906
4.688	5.813	0.5
4.688	5.875	0.5
4.688	5.938	0.5
4.688	6	0.5
4.688	6	0.781
4.688	6	0.906
4.688	6.25	0.5
4.688	6.25	0.969
4.688	6.375	0.5
4.734	5.984	0.5
4.75	5.75	0.391
4.75	5.75	0.484
4.75	5.75	0.5
4.75	5.75	0.563
4.75	5.75	0.625
4.75	5.75	0.75
4.75	5.75	0.938
4.75	5.875	0.5
4.75	5.875	0.563
4.75	5.875	0.625
4.75	5.938	0.5
4.75	6	0.5
4.75	6	0.563
4.75	6	0.625
4.75	6	0.75
4.75	6	0.906
4.75	6.125	0.5
4.75	6.25	0.5
4.75	6.25	0.625
4.75	6.25	0.75
4.75	6.25	0.906
4.75	6.375	0.5
4.75	6.5	0.625
4.813	5.813	0.5
4.813	5.813	0.75
4.813	5.875	0.5
4.813	5.875	0.625
4.813	5.905	0.563
4.813	5.938	0.5
4.813	6	0.5
4.813	6.125	0.5
4.813	6.25	0.5
4.813	6.313	0.5
4.813	6.375	0.625
4.875	5.875	0.5
4.875	5.875	0.625
4.875	5.875	0.75
4.875	5.938	0.5
4.875	6	0.5
4.875	6	0.625
4.875	6	0.906
4.875	6.063	0.5
4.875	6.125	0.5
4.875	6.125	0.625
4.875	6.125	0.906
4.875	6.25	0.5
4.875	6.25	0.563
4.875	6.25	0.859
4.875	6.375	0.5

d_1	D	B
4.875	6.5	0.5
4.875	6.5	0.625
4.875	6.5	0.906
4.875	6.625	0.5
4.875	6.625	0.906
4.875	6.625	0.969
4.875	6.75	0.5
4.922	5.906	0.5
4.922	5.922	0.5
4.922	5.984	0.5
4.922	6.125	0.438
4.922	6.891	0.625
4.938	5.938	0.438
4.938	5.938	0.5
4.938	5.938	0.625
4.938	5.938	0.75
4.938	6	0.5
4.938	6	0.625
4.938	6	0.75
4.938	6.063	0.5
4.938	6.125	0.5
4.938	6.188	0.5
4.938	6.25	0.5
4.938	6.25	0.563
4.938	6.25	0.625
4.938	6.375	0.5
4.938	6.375	0.563
4.938	6.438	0.5
4.938	6.438	0.563
4.938	6.438	0.75
4.938	6.5	0.5
4.938	6.5	0.625
4.938	6.5	0.719
4.938	6.5	0.906
4.938	6.75	0.5
4.969	6.375	0.5
4.984	6.234	0.5
5	6	0.375
5	6	0.438
5	6	0.5
5	6	0.563
5	6	0.625
5	6	0.688
5	6	0.719
5	6	0.75
5	6	0.906
5	6	0.969
5	6.063	0.5
5	6.125	0.5
5	6.125	0.563
5	6.219	0.5
5	6.25	0.5
5	6.25	0.563
5	6.25	0.625
5	6.25	0.75
5	6.25	0.906
5	6.25	0.969
5	6.313	0.781
5	6.375	0.5
5	6.375	0.625
5	6.375	0.719
5	6.375	0.75
5	6.438	0.5
5	6.5	0.5
5	6.5	0.563
5	6.5	0.625
5	6.5	0.75
5	6.5	0.906
5	6.563	0.5
5	6.625	0.5
5	6.75	0.5
5	6.75	0.625
5	6.875	0.5
5	7	0.5

d_1	D	B
5	7	0.625
5	7	0.75
5.063	6.063	0.5
5.063	6.063	0.75
5.063	6.125	0.5
5.063	6.25	0.5
5.063	6.25	0.625
5.063	6.375	0.563
5.063	6.75	0.5
5.125	6.125	0.438
5.125	6.125	0.5
5.125	6.125	0.625
5.125	6.125	0.75
5.125	6.125	0.844
5.125	6.125	0.906
5.125	6.125	0.969
5.125	6.25	0.5
5.125	6.25	0.563
5.125	6.25	0.906
5.125	6.375	0.5
5.125	6.375	0.563
5.125	6.375	0.625
5.125	6.5	0.5
5.125	6.5	0.625
5.125	6.5	0.906
5.125	6.625	0.484
5.125	6.625	0.5
5.125	6.625	0.75
5.125	6.688	0.625
5.125	6.75	0.5
5.125	7	0.5
5.125	7	0.625
5.125	7	0.719
5.188	6.188	0.5
5.188	6.188	0.625
5.188	6.188	0.75
5.188	6.25	0.5
5.188	6.25	0.625
5.188	6.375	0.5
5.188	6.438	0.5
5.188	6.438	0.625
5.188	6.5	0.5
5.188	6.5	0.625
5.188	6.625	0.5
5.188	6.75	0.5
5.188	7	0.5
5.188	7	0.75
5.203	6.313	0.5
5.25	6.25	0.5
5.25	6.25	0.625
5.25	6.25	0.75
5.25	6.313	0.5
5.25	6.375	0.5
5.25	6.438	0.5
5.25	6.5	0.5
5.25	6.5	0.625
5.25	6.5	0.719
5.25	6.5	0.75
5.25	6.5	0.969
5.25	6.563	0.75
5.25	6.625	0.5
5.25	6.625	0.625
5.25	6.75	0.5
5.25	6.75	0.625
5.25	6.75	0.688
5.25	6.75	0.75
5.25	6.75	0.906
5.25	6.875	0.5
5.25	7	0.5
5.25	7.125	0.5
5.25	7.125	0.906
5.25	7.25	0.625
5.28	6.28	0.5
5.297	6.297	0.5

Please use size tables in section *Size options of heavy industrial seals* on ***page 200*** to determine your required seal type and size.

Principal dimensions

d1	D	B
5.313	6.297	0.5
5.313	6.313	0.5
5.313	6.313	0.75
5.313	6.375	0.5
5.313	6.5	0.5
5.313	6.563	0.625
5.313	6.578	0.5
5.313	6.625	0.5
5.313	6.625	0.719
5.313	6.688	0.625
5.313	6.75	0.5
5.313	6.813	0.5
5.313	6.875	0.5
5.313	6.875	0.625
5.313	6.938	0.5
5.313	7.25	0.5
5.375	6.375	0.5
5.375	6.375	0.75
5.375	6.5	0.5
5.375	6.5	0.563
5.375	6.5	0.625
5.375	6.5	0.75
5.375	6.625	0.5
5.375	6.625	0.563
5.375	6.625	0.625
5.375	6.688	0.563
5.375	6.75	0.5
5.375	6.75	0.625
5.375	6.875	0.5
5.375	6.875	0.625
5.375	6.875	0.75
5.375	7	0.625
5.375	7.125	0.625
5.422	6.625	0.5
5.438	6.438	0.5
5.438	6.438	0.75
5.438	6.5	0.5
5.438	6.625	0.5
5.438	6.688	0.625
5.438	6.719	0.625
5.438	6.75	0.5
5.438	6.75	0.563
5.438	6.75	0.625
5.438	6.75	0.75
5.438	6.75	0.781
5.438	6.875	0.5
5.438	6.875	0.75
5.438	6.875	0.969
5.438	6.938	0.625
5.438	6.938	0.75
5.438	7	0.5
5.438	7.125	0.5
5.438	7.25	0.5
5.469	6.469	0.5
5.5	6.5	0.5
5.5	6.5	0.625
5.5	6.5	0.719
5.5	6.5	0.75
5.5	6.5	0.906
5.5	6.563	0.5
5.5	6.625	0.5
5.5	6.625	0.563
5.5	6.625	0.625
5.5	6.688	0.625
5.5	6.75	0.5
5.5	6.75	0.563
5.5	6.75	0.625
5.5	6.75	0.688
5.5	6.75	0.719
5.5	6.75	0.75
5.5	6.75	0.906
5.5	6.766	0.5
5.5	6.875	0.5
5.5	6.875	0.563

d_1	D	B
5.5	7	0.5
5.5	7	0.625
5.5	7	0.75
5.5	7	0.828
5.5	7	0.969
5.5	7.125	0.5
5.5	7.188	0.625
5.5	7.25	0.5
5.5	7.25	0.625
5.5	7.5	0.5
5.563	6.563	0.5
5.563	6.563	0.75
5.563	6.625	0.5
5.563	6.75	0.5
5.563	6.75	0.625
5.563	6.875	0.906
5.563	7.125	0.625
5.563	7.25	0.5
5.563	7.375	0.5
5.563	7.5	0.625
5.625	6.625	0.5
5.625	6.625	0.625
5.625	6.625	0.75
5.625	6.75	0.5
5.625	6.75	0.625
5.625	6.75	0.906
5.625	6.875	0.5
5.625	6.875	0.563
5.625	6.875	0.625
5.625	6.875	0.719
5.625	6.875	0.75
5.625	6.875	0.969
5.625	7	0.5
5.625	7	0.75
5.625	7.125	0.5
5.625	7.125	0.75
5.625	7.25	0.5
5.625	7.25	0.625
5.625	7.375	0.5
5.625	7.5	0.5
5.625	7.5	0.719
5.688	6.688	0.75
5.688	6.75	0.5
5.688	6.75	0.625
5.688	6.875	0.625
5.688	6.938	0.5
5.688	6.938	0.625
5.688	7	0.5
5.688	7	0.625
5.688	7.188	0.5
5.688	7.375	0.5
5.688	7.375	0.625
5.688	7.5	0.5
5.688	7.5	0.906
5.75	6.75	0.438
5.75	6.75	0.5
5.75	6.75	0.563
5.75	6.75	0.625
5.75	6.75	0.75
5.75	6.75	0.906
5.75	6.875	0.5
5.75	6.875	0.563
5.75	6.875	0.625
5.75	6.938	0.5
5.75	6.969	0.5
5.75	7	0.5
5.75	7	0.563
5.75	7	0.626
5.75	7	0.844
5.75	7	0.906
5.75	7	0.969
5.75	7.125	0.5
5.75	7.125	0.563
5.75	7.203	0.734

d_1	D	B
5.75	7.25	0.5
5.75	7.25	0.625
5.75	7.25	0.75
5.75	7.25	0.906
5.75	7.375	0.5
5.75	7.375	0.625
5.75	7.5	0.5
5.75	7.5	0.563
5.75	7.5	0.75
5.78	7.031	0.625
5.813	6.813	0.5
5.813	6.813	0.75
5.813	6.875	0.5
5.813	6.938	0.5
5.813	7	0.5
5.813	7	0.563
5.813	7.125	0.625
5.813	7.25	0.5
5.813	7.25	0.625
5.813	7.375	0.5
5.813	7.5	0.5
5.875	6.875	0.438
5.875	6.875	0.5
5.875	6.875	0.75
5.875	6.875	0.969
5.875	7	0.5
5.875	7.125	0.453
5.875	7.125	0.5
5.875	7.125	0.563
5.875	7.125	0.625
5.875	7.125	0.75
5.875	7.125	0.828
5.875	7.141	0.563
5.875	7.25	0.5
5.875	7.25	0.906
5.875	7.375	0.5
5.875	7.375	0.563
5.875	7.375	0.625
5.875	7.375	0.75
5.875	7.5	0.5
5.875	7.5	0.563
5.875	7.5	0.625
5.875	7.5	0.75
5.906	6.906	0.5
5.906	6.906	0.75
5.906	7.203	0.547
5.906	7.219	0.781
5.906	7.406	0.5
5.906	7.906	0.5
5.938	6.938	0.5
5.938	6.938	0.75
5.938	7	0.5
5.938	7	0.563
5.938	7	0.625
5.938	7.125	0.5
5.938	7.188	0.5
5.938	7.188	0.625
5.938	7.25	0.5
5.938	7.25	0.625
5.938	7.375	0.5
5.938	7.438	0.5
5.938	7.438	0.75
5.938	7.5	0.5
5.938	7.5	0.906
5.938	7.625	0.5
5.938	7.688	0.625
6	7	0.438
6	7	0.5
6	7	0.563
6	7	0.625
6	7	0.75
6	7	0.969
6	7.125	0.5
6	7.125	0.563

d_1	D	B
6	7.125	0.625
6	7.125	0.719
6	7.125	0.906
6	7.188	0.75
6	7.203	0.75
6	7.25	0.5
6	7.25	0.625
6	7.25	0.969
6	7.375	0.5
6	7.375	0.75
6	7.453	0.734
6	7.5	0.5
6	7.5	0.625
6	7.5	0.719
6	7.5	0.75
6	7.5	0.906
6	7.563	0.781
6	7.625	0.5
6	7.625	0.563
6	7.625	0.625
6	7.625	0.75
6	8	0.5
6.031	7.313	0.5
6.063	7.0469	0.75
6.063	7.063	0.438
6.063	7.063	0.5
6.063	7.063	0.75
6.063	7.125	0.5
6.063	7.313	0.625
6.063	7.375	0.5
6.063	7.5	0.5
6.063	7.5	0.75
6.063	7.5	0.906
6.063	7.563	0.75
6.063	7.688	0.5
6.125	7.125	0.5
6.125	7.125	0.563
6.125	7.125	0.625
6.125	7.125	0.75
6.125	7.188	0.5
6.125	7.25	0.5
6.125	7.25	0.625
6.125	7.375	0.5
6.125	7.375	0.625
6.125	7.5	0.5
6.125	7.5	0.75
6.125	7.5	0.906
6.125	7.5	0.969
6.125	7.625	0.5
6.125	7.625	0.625
6.125	7.625	0.688
6.125	7.625	0.75
6.188	7.188	0.5
6.188	7.188	0.75
6.188	7.25	0.5
6.188	7.25	0.734
6.188	7.438	0.5
6.188	7.438	0.625
6.188	7.5	0.5
6.188	7.5	0.625
6.188	7.688	0.75
6.219	7.75	0.625
6.219	8.063	0.75
6.25	7.25	0.5
6.25	7.25	0.625
6.25	7.25	0.75
6.25	7.25	0.906
6.25	7.25	0.969
6.25	7.375	0.5
6.25	7.375	0.563
6.25	7.375	0.625
6.25	7.5	0.5
6.25	7.5	0.563
6.25	7.5	0.625

Please use size tables in section *Size options of heavy industrial seals* on ***page 200*** to determine your required seal type and size.

d_1 **6.25–7.75** in

Principal dimensions

d1	D	B
6.25	7.5	0.75
6.25	7.625	0.5
6.25	7.688	0.625
6.25	7.75	0.5
6.25	7.75	0.625
6.25	7.75	0.719
6.25	7.75	0.75
6.25	7.75	0.906
6.25	7.875	0.625
6.28	7.531	0.625
6.297	7.297	0.5
6.297	7.547	0.625
6.297	7.874	0.531
6.313	7.313	0.5
6.313	7.313	0.625
6.313	7.313	0.75
6.375	7.375	0.5
6.375	7.375	0.75
6.375	7.5	0.5
6.375	7.5	0.625
6.375	7.5	0.75
6.375	7.5	0.969
6.375	7.625	0.5
6.375	7.625	0.625
6.375	7.688	0.625
6.375	7.75	0.5
6.375	7.75	0.625
6.375	7.875	0.5
6.375	7.875	0.625
6.375	7.875	0.75
6.438	7.438	0.5
6.438	7.438	0.75
6.438	7.5	0.5
6.438	7.5	0.625
6.438	7.5	0.906
6.438	7.688	0.625
6.438	7.688	0.75
6.438	7.75	0.75
6.438	7.938	0.625
6.438	7.938	0.75
6.438	7.969	0.75
6.469	7.469	0.5
6.5	7.5	0.438
6.5	7.5	0.5
6.5	7.5	0.563
6.5	7.5	0.625
6.5	7.5	0.75
6.5	7.5	0.781
6.5	7.5	0.844
6.5	7.5	0.906
6.5	7.625	0.625
6.5	7.688	0.625
6.5	7.75	0.5
6.5	7.75	0.625
6.5	7.75	0.75
6.5	7.875	0.625
6.5	7.875	0.75
6.5	7.938	0.625
6.5	8	0.5
6.5	8	0.563
6.5	8	0.625
6.5	8	0.75
6.5	8	0.844
6.5	8.063	0.625
6.5	8.125	0.625
6.563	7.563	0.5
6.625	7.625	0.5
6.625	7.625	0.625
6.625	7.625	0.75
6.625	7.75	0.625
6.625	7.875	0.5
6.625	7.875	0.625
6.625	7.938	0.5
6.625	7.938	0.625

d_1	D	B
6.625	8	0.5
6.625	8	0.625
6.625	8	0.75
6.625	8	0.844
6.625	8.125	0.5
6.625	8.125	0.625
6.625	8.125	0.688
6.625	8.125	0.75
6.625	8.125	0.969
6.625	8.25	0.625
6.625	8.25	0.75
6.625	8.375	0.5
6.625	8.375	0.625
6.625	8.5	0.625
6.688	7.688	0.5
6.688	7.75	0.5
6.688	7.75	0.625
6.688	7.938	0.5
6.688	7.938	0.625
6.703	7.953	0.5
6.75	7.75	0.438
6.75	7.75	0.5
6.75	7.75	0.625
6.75	7.75	0.75
6.75	7.875	0.5
6.75	7.875	0.625
6.75	8	0.5
6.75	8	0.625
6.75	8	0.719
6.75	8	0.75
6.75	8	0.844
6.75	8.125	0.625
6.75	8.125	0.75
6.75	8.25	0.5
6.75	8.25	0.563
6.75	8.25	0.625
6.75	8.25	0.75
6.75	8.25	0.781
6.75	8.375	0.625
6.75	8.5	0.5
6.75	8.5	0.625
6.75	8.625	0.625
6.75	8.75	0.625
6.75	8.75	0.875
6.781	8.031	0.625
6.813	8.313	0.75
6.875	7.875	0.438
6.875	7.875	0.5
6.875	7.875	0.625
6.875	7.875	0.75
6.875	7.875	0.969
6.875	8	0.438
6.875	8	0.5
6.875	8	0.625
6.875	8.063	0.563
6.875	8.125	0.5
6.875	8.125	0.563
6.875	8.125	0.625
6.875	8.25	0.625
6.875	8.25	0.75
6.875	8.375	0.5
6.875	8.375	0.625
6.875	8.375	0.75
6.875	8.5	0.5
6.875	8.5	0.625
6.875	8.5	0.75
6.875	8.75	0.625
6.891	7.875	0.5
6.891	7.891	0.5
6.891	8.375	0.75
6.906	8.156	0.625
6.938	7.938	0.5
6.938	8	0.625
6.938	8.063	0.5

d_1	D	B
6.938	8.125	0.625
6.938	8.125	0.75
6.938	8.375	0.625
6.938	8.438	0.5
6.938	8.5	0.625
7	8	0.5
7	8	0.625
7	8	0.75
7	8	0.844
7	8.125	0.625
7	8.125	0.75
7	8.141	0.75
7	8.188	0.625
7	8.25	0.5
7	8.25	0.625
7	8.25	0.75
7	8.375	0.5
7	8.375	0.625
7	8.375	0.688
7	8.375	0.75
7	8.5	0.5
7	8.5	0.625
7	8.5	0.75
7	8.5	0.875
7	8.5	0.969
7	8.563	0.781
7	8.75	0.5
7	8.75	0.625
7	8.75	0.813
7	9	0.813
7.063	8.063	0.5
7.063	8.063	0.625
7.063	8.563	0.5
7.063	8.563	0.75
7.063	8.625	0.625
7.078	8.563	0.5
7.078	8.578	0.625
7.125	8.125	0.5
7.125	8.125	0.625
7.125	8.25	0.469
7.125	8.25	0.5
7.125	8.25	0.625
7.125	8.25	0.75
7.125	8.25	0.969
7.125	8.375	0.5
7.125	8.375	0.625
7.125	8.5	0.5
7.125	8.5	0.625
7.125	8.625	0.5
7.125	8.625	0.625
7.125	8.625	0.75
7.125	8.75	0.625
7.125	8.75	0.75
7.188	8.188	0.5
7.188	8.438	0.5
7.188	8.438	0.625
7.188	8.5	0.5
7.188	8.563	0.625
7.188	8.641	0.625
7.188	8.688	0.625
7.25	8.25	0.438
7.25	8.25	0.5
7.25	8.25	0.625
7.25	8.25	0.75
7.25	8.375	0.625
7.25	8.5	0.5
7.25	8.5	0.625
7.25	8.5	0.75
7.25	8.625	0.625
7.25	8.625	0.75
7.25	8.703	0.609
7.25	8.75	0.5
7.25	8.75	0.625
7.25	8.75	0.75

d_1	D	B
7.25	8.75	0.875
7.25	9	0.5
7.281	8.281	0.5
7.281	8.859	0.625
7.312	8.375	0.625
7.312	8.438	0.563
7.375	8.375	0.5
7.375	8.375	0.625
7.375	8.375	0.75
7.375	8.5	0.5
7.375	8.5	0.625
7.375	8.625	0.625
7.375	8.625	0.75
7.375	8.75	0.625
7.375	8.875	0.625
7.375	8.875	0.75
7.375	9	0.625
7.375	9.125	0.625
7.375	9.125	0.75
7.375	9.25	0.625
7.438	8.438	0.5
7.438	8.5	0.5
7.438	8.5	0.625
7.438	8.688	0.625
7.438	8.938	0.75
7.469	8.469	0.688
7.5	8.5	0.5
7.5	8.5	0.625
7.5	8.5	0.688
7.5	8.5	0.75
7.5	8.563	0.5
7.5	8.625	0.625
7.5	8.75	0.5
7.5	8.75	0.625
7.5	8.875	0.5
7.5	8.875	0.625
7.5	9	0.5
7.5	9	0.563
7.5	9	0.625
7.5	9	0.719
7.5	9	0.75
7.5	9	0.844
7.5	9	0.938
7.5	9.125	0.625
7.5	9.125	0.75
7.5	9.25	0.625
7.5	9.25	0.75
7.5	9.25	0.938
7.531	8.781	0.625
7.563	9.063	0.625
7.563	9.063	0.75
7.625	8.625	0.5
7.625	8.625	0.625
7.625	8.75	0.625
7.625	8.875	0.625
7.625	8.938	0.781
7.625	9	0.625
7.625	9	0.75
7.625	9.125	0.5
7.625	9.125	0.625
7.625	9.125	0.75
7.625	9.188	0.625
7.625	9.25	0.625
7.688	8.688	0.5
7.688	9.188	0.75
7.688	9.25	0.625
7.75	8.75	0.438
7.75	8.75	0.5
7.75	8.75	0.625
7.75	8.813	0.5
7.75	8.875	0.625
7.75	8.875	0.75
7.75	8.938	0.625
7.75	9	0.5

Please use size tables in section *Size options of heavy industrial seals* on ***page 200*** to determine your required seal type and size.

Principal dimensions

d1	D	B
7.75	9	0.625
7.75	9	0.75
7.75	9.063	0.781
7.75	9.125	0.625
7.75	9.25	0.5
7.75	9.25	0.625
7.75	9.25	0.75
7.75	9.25	0.844
7.75	9.25	0.875
7.75	9.25	0.969
7.75	9.375	0.625
7.813	8.813	0.438
7.813	8.813	0.5
7.813	9	0.625
7.813	9.063	0.625
7.813	9.25	0.5
7.813	9.313	0.75
7.844	8.844	0.5
7.875	8.875	0.5
7.875	8.875	0.625
7.875	8.875	0.75
7.875	8.938	0.5
7.875	9	0.438
7.875	9	0.5
7.875	9	0.625
7.875	9.125	0.5
7.875	9.125	0.625
7.875	9.25	0.625
7.875	9.25	0.75
7.875	9.359	0.688
7.875	9.375	0.5
7.875	9.375	0.625
7.875	9.375	0.688
7.875	9.375	0.75
7.875	9.375	0.969
7.875	9.438	0.625
7.875	9.5	0.75
7.875	9.875	0.625
7.938	8.938	0.5
7.938	8.938	0.75
7.938	9	0.5
7.938	9.125	0.625
7.938	9.125	0.969
7.938	9.188	0.625
7.938	9.25	0.625
7.938	9.438	0.75
8	9	0.438
8	9	0.5
8	9	0.625
8	9	0.75
8	9	0.969
8	9.125	0.5
8	9.125	0.625
8	9.125	0.75
8	9.25	0.5
8	9.25	0.625
8	9.25	0.75
8	9.25	0.844
8	9.25	1
8	9.375	0.625
8	9.438	0.5
8	9.5	0.5
8	9.5	0.625
8	9.5	0.688
8	9.5	0.75
8	9.5	0.969
8	9.5	1.094
8	9.594	0.609
8	9.625	0.75
8	9.75	0.75
8	9.875	0.813
8	10	0.625
8	10	0.688
8	10	0.75

d_1	D	B
8	10	0.813
8	10	1
8.063	9.313	0.5
8.063	9.313	0.625
8.063	9.563	0.5
8.063	9.563	0.75
8.063	10	1
8.063	10.063	1
8.125	9.125	0.438
8.125	9.125	0.5
8.125	9.188	0.5
8.125	9.25	0.625
8.125	9.375	0.625
8.125	9.625	0.5
8.125	9.625	0.75
8.125	10	0.75
8.125	10	1
8.125	10.125	0.625
8.125	10.125	0.688
8.125	10.125	0.75
8.125	10.125	0.875
8.188	9.188	0.5
8.188	9.313	0.5
8.188	9.688	0.5
8.25	9.25	0.438
8.25	9.25	0.5
8.25	9.25	0.625
8.25	9.25	0.75
8.25	9.375	0.5
8.25	9.375	0.625
8.25	9.5	0.5
8.25	9.5	0.625
8.25	9.5	0.75
8.25	9.5	0.844
8.25	9.5	1.125
8.25	9.563	0.781
8.25	9.688	0.75
8.25	9.75	0.5
8.25	9.75	0.625
8.25	9.75	0.75
8.25	9.813	0.75
8.25	9.844	0.625
8.25	10	0.75
8.25	10.25	0.625
8.25	10.25	0.75
8.25	10.25	0.813
8.25	10.25	1
8.25	10.25	1.219
8.25	10.5	0.875
8.313	9.313	0.5
8.313	9.563	0.625
8.375	9.375	0.5
8.375	9.5	0.625
8.375	9.5	0.75
8.375	9.563	0.75
8.375	9.625	0.5
8.375	9.625	0.625
8.375	9.75	0.625
8.375	9.75	0.75
8.375	9.75	1.156
8.375	9.875	0.5
8.375	9.875	0.625
8.375	9.875	0.688
8.375	9.875	0.75
8.375	9.875	1.156
8.375	10	0.5
8.375	10	0.625
8.375	10.375	0.75
8.375	10.375	0.813
8.375	10.375	1
8.375	10.375	1.25
8.375	10.5	0.875
8.406	9.406	0.5
8.438	9.563	0.5

d_1	D	B
8.438	9.688	0.625
8.438	9.938	0.5
8.438	9.938	0.75
8.438	10	0.625
8.438	10	1
8.469	9.5	0.5
8.469	9.969	0.5
8.469	9.969	0.75
8.5	9.5	0.5
8.5	9.5	0.625
8.5	9.5	0.969
8.5	9.75	0.5
8.5	9.75	0.563
8.5	9.75	0.625
8.5	9.75	0.75
8.5	9.875	0.75
8.5	10	0.5
8.5	10	0.625
8.5	10	0.688
8.5	10	0.75
8.5	10	1
8.5	10	1.25
8.5	10.063	0.75
8.5	10.25	0.75
8.5	10.375	0.625
8.5	10.5	0.5
8.5	10.5	0.625
8.5	10.5	0.75
8.5	10.5	0.813
8.5	10.5	1
8.5	10.5	1.25
8.5	10.625	0.75
8.531	9.781	0.625
8.563	10.063	0.75
8.625	9.625	0.469
8.625	9.625	0.5
8.625	9.625	0.563
8.625	9.813	0.625
8.625	9.875	0.5
8.625	9.875	0.625
8.625	10	0.625
8.625	10	0.75
8.625	10.125	0.5
8.625	10.125	0.609
8.625	10.125	0.625
8.625	10.125	0.688
8.625	10.125	0.75
8.625	10.25	0.625
8.625	10.25	0.688
8.625	10.25	0.75
8.625	10.5	0.5
8.625	10.5	0.75
8.625	10.5	1
8.625	10.625	0.625
8.625	10.625	0.75
8.625	10.625	0.813
8.625	10.625	1
8.625	10.75	0.813
8.625	10.75	0.875
8.625	10.75	1
8.656	10.125	0.75
8.688	9.688	0.5
8.688	9.938	0.5
8.688	9.938	0.625
8.688	9.938	0.75
8.688	10.625	0.75
8.75	9.75	0.5
8.75	9.75	0.563
8.75	9.875	0.625
8.75	9.875	0.688
8.75	9.875	0.75
8.75	10	0.516
8.75	10	0.625
8.75	10	0.75

d_1	D	B
8.75	10	1
8.75	10.25	0.5
8.75	10.25	0.563
8.75	10.25	0.625
8.75	10.25	0.656
8.75	10.25	0.688
8.75	10.25	0.75
8.75	10.313	0.625
8.75	10.375	0.75
8.75	10.5	0.688
8.75	10.5	0.75
8.75	10.5	0.813
8.75	10.625	0.75
8.75	10.75	0.625
8.75	10.75	0.75
8.75	10.75	0.813
8.75	10.75	1
8.75	10.875	0.813
8.78	10.781	0.75
8.813	9.813	0.5
8.813	10.313	0.5
8.813	10.313	0.75
8.859	9.859	0.5
8.859	10.359	0.75
8.859	11.016	0.906
8.875	9.875	0.5
8.875	10.125	0.625
8.875	10.125	0.75
8.875	10.25	0.75
8.875	10.375	0.5
8.875	10.375	0.75
8.875	10.5	0.75
8.875	10.625	0.813
8.875	10.75	0.75
8.875	10.875	0.625
8.875	10.875	0.75
8.875	10.875	0.813
8.875	10.875	1
8.875	11	0.875
8.938	9.938	0.5
8.938	10.188	0.625
8.938	10.438	0.75
8.938	10.5	0.75
8.97	10.5	0.5
8.97	10.5	0.75
9	10	0.5
9	10.188	0.625
9	10.25	0.5
9	10.25	0.625
9	10.25	0.75
9	10.375	0.5
9	10.375	0.625
9	10.375	0.75
9	10.5	0.5
9	10.5	0.563
9	10.5	0.609
9	10.5	0.625
9	10.5	0.656
9	10.5	0.688
9	10.5	0.75
9	10.5	0.813
9	10.563	0.625
9	10.625	0.625
9	10.625	0.75
9	10.672	0.75
9	10.75	0.75
9	10.875	0.75
9	11	0.625
9	11	0.75
9	11	0.813
9	11	0.875
9	11	1
9	11	1.25
9	11.25	0.875

Please use size tables in section *Size options of heavy industrial seals* on ***page 200*** to determine your required seal type and size.

d_1 **9.063–10.75** in

Principal dimensions

d1	D	B
9.063	10.063	0.5
9.063	10.5	0.75
9.063	10.563	0.75
9.063	10.625	0.625
9.063	10.75	0.75
9.063	11.063	0.75
9.094	10.406	0.781
9.125	10.125	0.5
9.125	10.375	0.625
9.125	10.5	0.625
9.125	10.625	0.563
9.125	10.625	0.625
9.125	10.625	0.688
9.125	10.625	0.75
9.125	10.625	1.25
9.125	10.75	0.625
9.125	10.75	0.75
9.125	10.797	0.703
9.125	11	0.75
9.125	11.125	0.625
9.125	11.125	0.75
9.125	11.125	0.813
9.125	11.125	1
9.125	11.125	1.25
9.156	10.656	0.75
9.188	10.375	0.75
9.188	10.688	0.75
9.25	10.25	0.5
9.25	10.5	0.5
9.25	10.5	0.625
9.25	10.5	0.75
9.25	10.625	0.75
9.25	10.75	0.5
9.25	10.75	0.625
9.25	10.75	0.656
9.25	10.75	0.688
9.25	10.75	0.75
9.25	10.813	0.625
9.25	10.828	0.625
9.25	10.875	0.75
9.25	11	0.625
9.25	11	0.75
9.25	11.25	0.563
9.25	11.25	0.625
9.25	11.25	0.688
9.25	11.25	0.75
9.25	11.25	0.813
9.25	11.25	1
9.25	11.375	0.875
9.25	11.5	0.875
9.313	10.625	0.781
9.313	11.125	0.688
9.313	11.313	1
9.375	10.375	0.5
9.375	10.625	0.5
9.375	10.625	0.625
9.375	10.875	0.75
9.375	11	0.625
9.375	11	0.75
9.375	11.25	0.75
9.375	11.375	0.625
9.375	11.375	0.75
9.375	11.375	0.813
9.375	11.375	1
9.438	10.438	0.5
9.438	10.625	0.625
9.438	10.625	0.75
9.438	10.688	0.625
9.438	10.75	0.625
9.438	10.813	0.703
9.438	10.938	0.75
9.438	11.5	0.875
9.438	11.5	1
9.5	10.5	0.5

d_1	D	B
9.5	10.75	0.5
9.5	10.75	0.563
9.5	10.75	0.625
9.5	10.875	0.75
9.5	10.938	0.75
9.5	11	0.5
9.5	11	0.625
9.5	11	0.688
9.5	11	0.75
9.5	11.125	0.625
9.5	11.25	0.625
9.5	11.25	0.75
9.5	11.375	0.625
9.5	11.438	0.625
9.5	11.5	0.5
9.5	11.5	0.578
9.5	11.5	0.625
9.5	11.5	0.688
9.5	11.5	0.75
9.5	11.5	0.813
9.5	11.5	1
9.5	11.5	1.25
9.563	10.563	0.5
9.563	10.813	0.625
9.563	11.063	0.625
9.625	10.625	0.5
9.625	10.875	0.5
9.625	10.875	0.625
9.625	10.875	0.75
9.625	11	0.75
9.625	11.125	0.5
9.625	11.125	0.625
9.625	11.125	0.75
9.625	11.625	0.75
9.625	11.625	0.813
9.625	11.625	1
9.688	10.875	0.625
9.688	11.125	0.75
9.688	11.188	0.75
9.75	10.75	0.5
9.75	11	0.5
9.75	11	0.625
9.75	11	0.75
9.75	11.125	0.563
9.75	11.125	0.625
9.75	11.125	0.75
9.75	11.25	0.625
9.75	11.25	0.688
9.75	11.25	0.75
9.75	11.25	1
9.75	11.375	0.75
9.75	11.5	0.75
9.75	11.75	0.625
9.75	11.75	0.688
9.75	11.75	0.75
9.75	11.75	1
9.75	12	0.875
9.813	11.125	0.781
9.813	11.406	0.625
9.844	10.844	0.5
9.844	11.094	0.625
9.844	11.156	0.781
9.844	11.25	0.688
9.844	11.344	0.75
9.844	11.344	0.813
9.844	11.469	0.75
9.844	11.844	0.75
9.859	10.859	0.5
9.875	10.875	0.5
9.875	11.375	0.625
9.875	11.375	0.75
9.875	11.438	0.625
9.875	11.5	0.75
9.875	11.75	0.875

d_1	D	B
9.875	11.875	0.75
9.875	11.875	0.969
9.875	12	0.875
9.938	10.938	0.5
9.938	11.188	0.625
9.938	11.438	0.563
9.938	11.438	0.75
9.938	11.5	0.625
9.938	11.5	0.75
9.938	11.938	0.625
9.938	11.938	0.75
9.938	12	0.75
9.938	12	1
9.938	12.125	1
10	11	0.5
10	11.25	0.5
10	11.25	0.563
10	11.25	0.625
10	11.25	0.688
10	11.25	0.75
10	11.25	1
10	11.313	0.781
10	11.375	0.5
10	11.375	0.563
10	11.375	0.75
10	11.438	0.75
10	11.5	0.563
10	11.5	0.625
10	11.5	0.688
10	11.5	0.75
10	11.5	1.063
10	11.625	0.75
10	11.641	0.75
10	11.75	0.563
10	11.75	0.625
10	11.75	0.75
10	11.875	0.563
10	11.875	0.813
10	12	0.625
10	12	0.688
10	12	0.703
10	12	0.75
10	12	0.813
10	12	0.875
10	12	1
10	12	1.25
10	12.25	0.813
10	12.25	0.875
10.063	11.688	0.75
10.063	11.813	0.781
10.125	11.375	0.625
10.125	11.5	0.625
10.125	11.5	0.75
10.125	11.625	0.5
10.125	11.625	0.688
10.125	11.625	0.75
10.125	11.75	0.688
10.125	11.75	0.75
10.125	12	0.75
10.125	12	1
10.188	11.188	0.5
10.188	11.438	0.625
10.188	12.25	1
10.236	11.484	0.625
10.236	11.736	0.625
10.236	11.736	0.75
10.236	11.969	0.75
10.236	12	0.813
10.25	11.25	0.5
10.25	11.5	0.5
10.25	11.5	0.625
10.25	11.688	0.625
10.25	11.75	0.625
10.25	11.75	0.688

d_1	D	B
10.25	11.75	0.75
10.25	11.813	0.703
10.25	11.813	0.781
10.25	12	0.625
10.25	12	0.75
10.25	12.25	0.625
10.25	12.25	0.75
10.25	12.25	0.813
10.25	12.25	1
10.25	12.5	0.75
10.25	12.5	0.813
10.266	11.813	0.547
10.313	11.938	0.813
10.375	11.625	0.625
10.375	11.875	0.5
10.375	11.875	0.75
10.375	12	0.75
10.375	12.25	0.75
10.375	12.5	0.875
10.438	11.688	0.813
10.438	11.938	0.625
10.438	11.938	0.75
10.438	12	0.625
10.438	12	0.75
10.438	12.438	0.75
10.438	12.438	0.875
10.438	12.5	1
10.5	11.5	0.5
10.5	11.75	0.5
10.5	11.75	0.625
10.5	11.75	0.75
10.5	11.75	0.875
10.5	11.906	0.766
10.5	12	0.5
10.5	12	0.625
10.5	12	0.688
10.5	12	0.75
10.5	12.125	0.625
10.5	12.125	0.75
10.5	12.25	0.75
10.5	12.5	0.5
10.5	12.5	0.625
10.5	12.5	0.75
10.5	12.5	0.813
10.5	12.5	0.875
10.5	12.5	1
10.5	12.625	1
10.5	13.375	0.75
10.531	12.031	0.625
10.563	12.563	0.75
10.625	11.813	0.625
10.625	11.875	0.625
10.625	12	0.75
10.625	12.125	0.75
10.625	12.188	0.625
10.625	12.25	0.75
10.625	12.375	0.75
10.625	12.375	0.781
10.625	12.5	0.75
10.625	12.5	0.969
10.625	12.5	1
10.625	12.625	0.75
10.625	12.625	0.813
10.625	13	0.75
10.688	12.25	0.625
10.688	12.5	0.625
10.688	12.688	0.75
10.75	11.75	0.5
10.75	12	0.563
10.75	12	0.594
10.75	12	0.625
10.75	12.063	0.781
10.75	12.25	0.563
10.75	12.25	0.594

Please use size tables in section *Size options of heavy industrial seals* on ***page 200*** to determine your required seal type and size.

Principal dimensions

d1	D	B
10.75	12.25	0.625
10.75	12.25	0.688
10.75	12.25	0.75
10.75	12.375	0.563
10.75	12.375	0.625
10.75	12.5	0.563
10.75	12.5	0.625
10.75	12.5	0.875
10.75	12.625	0.75
10.75	12.688	0.578
10.75	12.75	0.563
10.75	12.75	0.625
10.75	12.75	0.75
10.75	12.75	0.813
10.75	12.75	0.875
10.75	12.75	1
10.75	13	0.813
10.75	13	0.875
10.75	13.25	0.813
10.813	12.406	0.781
10.826	11.828	0.5
10.875	12.375	0.688
10.875	12.375	0.75
10.875	12.5	0.688
10.875	12.5	1
10.875	12.625	0.75
10.875	12.875	0.5
10.875	12.875	0.578
10.875	12.875	0.813
10.938	12.188	0.813
10.938	12.438	0.625
10.938	12.5	0.625
10.938	12.938	0.75
11	12	0.5
11	12	0.625
11	12.25	0.563
11	12.25	0.609
11	12.25	0.625
11	12.25	0.688
11	12.313	0.781
11	12.375	0.75
11	12.5	0.5
11	12.5	0.625
11	12.5	0.688
11	12.5	0.75
11	12.563	0.813
11	12.594	0.781
11	12.625	0.625
11	12.625	0.75
11	12.719	0.781
11	12.75	0.75
11	12.813	0.625
11	12.875	0.813
11	13	0.5
11	13	0.625
11	13	0.688
11	13	0.75
11	13	0.813
11	13	0.938
11	13	1
11	13.25	1
11.031	12.031	0.5
11.063	12.25	0.75
11.063	12.313	0.625
11.063	12.5	0.75
11.063	12.75	0.75
11.063	13	0.75
11.125	12.375	0.625
11.125	12.5	0.75
11.125	12.75	1
11.125	13	0.688
11.125	13	0.75
11.125	13	1
11.125	13.125	0.813

d_1	D	B
11.125	13.25	0.813
11.125	13.25	0.875
11.125	13.375	0.75
11.188	12.188	0.5
11.188	12.5	0.75
11.188	13	0.75
11.25	12.5	0.625
11.25	12.531	0.625
11.25	12.75	0.625
11.25	12.75	0.688
11.25	12.75	0.75
11.25	13.25	0.625
11.25	13.25	0.688
11.25	13.25	0.813
11.25	13.25	1
11.25	13.5	0.875
11.25	13.5	1
11.313	12.813	0.75
11.344	12.594	0.625
11.359	13.75	0.875
11.375	12.375	0.5
11.375	12.625	0.625
11.375	12.875	0.625
11.375	12.875	0.75
11.375	13	0.625
11.375	13	0.688
11.375	13	0.75
11.375	13.375	0.813
11.375	13.5	1
11.375	13.5	1.25
11.422	12.922	0.75
11.438	13	0.688
11.438	13.75	0.625
11.5	12.5	0.5
11.5	12.75	0.5
11.5	12.75	0.625
11.5	12.875	0.688
11.5	12.875	0.75
11.5	13	0.5
11.5	13	0.625
11.5	13	0.688
11.5	13	0.703
11.5	13	0.75
11.5	13	0.813
11.5	13	1.25
11.5	13.125	0.813
11.5	13.25	0.75
11.5	13.25	0.813
11.5	13.375	0.75
11.5	13.5	0.5
11.5	13.5	0.625
11.5	13.5	0.75
11.5	13.5	0.813
11.5	13.5	0.906
11.5	13.5	1
11.5	13.5	1.25
11.5	13.672	0.688
11.563	13.063	0.75
11.625	12.625	0.5
11.625	13	0.75
11.625	13.125	0.75
11.625	13.25	0.75
11.625	13.375	0.781
11.625	13.625	0.813
11.625	13.625	1
11.688	13	0.75
11.688	13.188	0.625
11.688	13.188	0.75
11.688	13.25	0.625
11.688	13.75	0.75
11.75	12.75	0.5
11.75	13	0.75
11.75	13	0.813
11.75	13.063	0.781

d_1	D	B
11.75	13.25	0.625
11.75	13.25	0.688
11.75	13.25	0.75
11.75	13.25	0.813
11.75	13.5	0.75
11.75	13.5	0.813
11.75	13.563	0.5
11.75	13.75	0.625
11.75	13.75	0.75
11.75	13.75	0.813
11.75	13.75	1
11.75	14	1
11.75	14.125	1
11.813	12.813	0.5
11.813	13.063	0.625
11.813	13.313	0.75
11.813	13.531	0.781
11.813	13.563	0.781
11.813	13.781	0.75
11.813	13.781	1
11.813	13.813	0.625
11.813	13.813	0.75
11.813	13.813	0.813
11.813	14	0.75
11.875	12.875	0.5
11.875	13.375	0.625
11.875	13.375	0.75
11.875	13.438	0.625
11.875	13.875	0.75
11.906	13.156	0.625
11.938	13.438	0.625
11.938	13.938	0.625
11.938	13.938	0.75
11.938	13.938	0.813
12	13	0.5
12	13.25	0.625
12	13.25	0.75
12	13.313	0.781
12	13.5	0.625
12	13.5	0.688
12	13.5	0.75
12	13.5	0.813
12	13.625	0.625
12	13.625	0.688
12	13.625	0.75
12	13.75	0.688
12	13.75	0.75
12	13.875	0.5
12	13.938	0.813
12	14	0.625
12	14	0.688
12	14	0.75
12	14	0.813
12	14	0.938
12	14	1
12	14	1.25
12	14.188	1
12	14.25	1
12	14.359	0.75
12	14.75	0.813
12	14.75	0.875
12.063	13.313	0.75
12.063	13.563	0.75
12.063	13.625	0.75
12.125	13.125	0.5
12.125	13.375	0.75
12.125	13.625	0.75
12.125	13.875	0.688
12.125	13.875	0.75
12.125	14	0.875
12.125	14	1
12.125	14.125	0.75
12.188	13.438	0.625
12.188	13.688	0.625

d_1	D	B
12.188	14	0.75
12.203	13.203	0.5
12.203	13.688	0.625
12.203	13.781	0.688
12.25	13.5	0.625
12.25	13.5	0.75
12.25	13.75	0.625
12.25	13.75	0.688
12.25	13.75	0.75
12.25	13.75	0.813
12.25	13.813	0.625
12.25	13.813	0.719
12.25	13.875	0.625
12.25	14	0.625
12.25	14	0.688
12.25	14	0.75
12.25	14	0.875
12.25	14.125	0.75
12.25	14.25	0.625
12.25	14.25	0.75
12.25	14.25	0.813
12.25	14.25	1
12.25	14.25	1.25
12.281	13.75	0.688
12.313	13.938	0.75
12.375	13.375	0.5
12.375	13.688	0.781
12.375	13.875	0.625
12.375	13.875	0.688
12.375	13.875	0.75
12.375	14	0.688
12.375	14	0.75
12.375	14.125	0.813
12.375	14.375	0.688
12.375	14.375	1
12.375	14.5	0.813
12.375	14.5	0.875
12.406	13.906	0.75
12.438	14	0.75
12.438	14.375	0.813
12.438	14.438	0.813
12.5	13.5	0.5
12.5	13.75	0.625
12.5	13.75	0.75
12.5	13.813	0.781
12.5	13.906	0.75
12.5	14	0.625
12.5	14	0.688
12.5	14	0.75
12.5	14	0.813
12.5	14.063	0.625
12.5	14.063	0.75
12.5	14.25	0.75
12.5	14.375	0.75
12.5	14.5	0.75
12.5	14.5	0.813
12.5	14.5	0.906
12.5	14.5	1
12.5	14.5	1.25
12.5	14.75	1
12.5	15	0.813
12.563	14.063	0.75
12.625	13.875	0.625
12.625	14	0.75
12.625	14.125	0.688
12.625	14.125	0.75
12.625	14.125	1
12.625	14.5	0.688
12.625	14.5	0.875
12.625	14.625	0.75
12.625	14.625	0.875
12.625	14.625	1
12.688	14.25	0.75
12.688	14.688	0.813

Please use size tables in section *Size options of heavy industrial seals* on ***page 200*** to determine your required seal type and size.

d_1 **12.688–15** in

Principal dimensions

d1	D	B
12.688	14.75	0.813
12.688	14.75	1
12.75	13.75	0.5
12.75	14	0.5
12.75	14	0.75
12.75	14.25	0.625
12.75	14.25	0.688
12.75	14.25	0.75
12.75	14.25	0.813
12.75	14.5	0.75
12.75	14.688	0.813
12.75	14.75	0.688
12.75	14.75	0.75
12.75	14.75	0.813
12.75	14.75	1
12.75	15	0.813
12.75	15	0.875
12.75	15.25	0.875
12.75	15.5	0.875
12.813	14.75	0.891
12.813	14.813	0.75
12.875	13.875	0.5
12.875	14.375	0.75
12.875	14.75	0.813
12.875	14.75	1
12.875	14.875	0.75
12.875	15	0.75
12.875	15	0.828
12.875	15.5	0.875
12.906	14.906	0.75
12.938	14.25	0.625
13	14	0.5
13	14.25	0.625
13	14.25	0.688
13	14.313	0.781
13	14.5	0.625
13	14.5	0.688
13	14.5	0.75
13	14.5	0.813
13	14.5	1
13	14.609	0.75
13	14.625	0.75
13	14.688	0.75
13	14.734	0.703
13	14.75	0.5
13	14.75	0.75
13	14.813	0.625
13	14.875	0.688
13	14.875	0.875
13	15	0.625
13	15	0.75
13	15	0.813
13	15	1
13.094	15.094	0.75
13.125	14.625	0.75
13.125	14.875	0.625
13.125	15	0.75
13.125	15.125	0.75
13.125	15.125	0.813
13.188	14.188	0.5
13.188	14.375	0.625
13.188	14.75	0.703
13.25	14.25	0.5
13.25	14.406	0.625
13.25	14.5	0.625
13.25	14.75	0.625
13.25	14.75	0.688
13.25	14.75	0.75
13.25	14.875	0.688
13.25	14.875	0.75
13.25	15	0.688
13.25	15	0.75
13.25	15.125	0.5
13.25	15.125	0.688

d_1	D	B
13.25	15.125	0.875
13.25	15.25	0.688
13.25	15.25	0.75
13.25	15.25	0.813
13.25	15.25	1
13.25	15.375	1
13.25	15.5	1
13.25	16	0.875
13.313	15.313	0.813
13.375	14.375	0.5
13.375	14.625	0.5
13.375	14.625	0.625
13.375	14.875	0.625
13.375	14.875	0.75
13.375	15	0.75
13.375	15.375	0.813
13.375	15.375	0.875
13.469	14.469	0.5
13.5	14.5	0.5
13.5	15	0.625
13.5	15	0.688
13.5	15	0.75
13.5	15.25	0.75
13.5	15.313	0.625
13.5	15.375	0.75
13.5	15.5	0.688
13.5	15.5	0.75
13.5	15.5	0.813
13.5	15.5	0.875
13.5	15.5	1
13.5	15.75	0.813
13.5	15.75	0.875
13.5	15.75	1
13.5	16.5	1
13.563	15.063	0.75
13.578	14.578	0.5
13.578	15.031	0.75
13.625	14.625	0.5
13.625	14.875	0.688
13.625	14.875	0.75
13.625	15.031	0.75
13.625	15.5	1
13.625	15.625	0.813
13.625	16	0.984
13.625	16.125	1.25
13.75	14.75	0.5
13.75	15	0.75
13.75	15.25	0.5
13.75	15.25	0.625
13.75	15.25	0.688
13.75	15.25	0.75
13.75	15.375	0.75
13.75	15.5	0.75
13.75	15.75	0.625
13.75	15.75	0.75
13.75	15.75	0.813
13.75	15.75	0.969
13.75	15.75	1
13.75	16	0.813
13.75	16	0.875
13.781	15.094	0.781
13.813	16	0.813
13.813	16	1
13.875	14.875	0.5
13.875	15.375	0.75
13.875	15.5	0.688
13.875	15.5	0.813
13.875	15.625	0.625
13.875	15.875	0.5
13.875	15.875	0.813
13.875	16	0.813
13.875	16	1
13.938	15.438	0.625
13.938	15.438	0.688

d_1	D	B
13.938	15.438	0.75
13.938	15.5	0.688
13.938	15.5	0.75
13.938	16	0.688
13.938	16	0.875
13.969	15.469	0.75
14	15	0.5
14	15.25	0.75
14	15.313	0.781
14	15.375	0.531
14	15.5	0.625
14	15.5	0.688
14	15.5	0.75
14	15.5	0.781
14	15.5	1
14	15.563	0.75
14	15.625	0.625
14	15.625	0.75
14	15.625	0.813
14	15.75	0.5
14	15.75	0.688
14	15.75	0.75
14	15.75	0.813
14	15.75	0.875
14	16	0.625
14	16	0.75
14	16	0.813
14	16	1
14	16.25	0.813
14	16.25	1
14	16.5	0.813
14	16.5	1
14	16.625	0.625
14.016	15.5	0.688
14.063	16.063	0.813
14.094	15.5	0.75
14.125	15.125	0.5
14.125	15.625	0.75
14.141	15.641	0.625
14.172	16.734	0.844
14.173	15.672	0.75
14.188	15.5	0.625
14.188	15.5	0.688
14.188	15.688	0.625
14.188	15.688	0.75
14.188	15.75	0.625
14.188	15.75	0.75
14.188	15.906	0.781
14.188	16	0.875
14.188	16.188	0.75
14.188	16.188	0.813
14.188	16.563	0.594
14.188	16.75	0.875
14.25	15.75	0.688
14.25	15.75	0.75
14.25	15.984	0.75
14.25	16	0.688
14.25	16	0.75
14.25	16	0.813
14.25	16	0.875
14.25	16.25	0.625
14.25	16.25	0.75
14.25	16.25	0.813
14.25	16.5	0.813
14.25	16.5	0.875
14.344	16	0.688
14.375	15.875	0.75
14.375	15.938	0.781
14.375	16	0.688
14.375	16.094	0.781
14.375	16.375	0.75
14.375	16.406	0.75
14.438	15.938	0.625
14.438	16	0.75

d_1	D	B
14.484	16.313	0.563
14.5	15.5	0.5
14.5	15.75	0.625
14.5	15.75	0.75
14.5	16	0.563
14.5	16	0.625
14.5	16	0.688
14.5	16	0.75
14.5	16	0.813
14.5	16.25	0.625
14.5	16.25	0.75
14.5	16.375	0.813
14.5	16.5	0.625
14.5	16.5	0.75
14.5	16.5	0.813
14.563	16	0.625
14.563	16.313	0.75
14.563	16.313	0.781
14.625	15.625	0.5
14.625	16	0.625
14.625	16.125	0.75
14.625	16.25	0.688
14.625	16.25	0.75
14.625	16.25	0.875
14.625	16.75	0.813
14.625	16.75	1
14.688	15.688	0.5
14.688	16.188	0.625
14.688	16.188	0.75
14.688	16.688	0.813
14.75	16.125	0.688
14.75	16.125	0.75
14.75	16.25	0.625
14.75	16.25	0.688
14.75	16.25	0.75
14.75	16.5	0.688
14.75	16.5	0.75
14.75	16.5	0.781
14.75	16.5	0.813
14.75	16.5	0.875
14.75	16.625	0.813
14.75	16.75	0.75
14.75	16.75	0.813
14.813	16.813	0.875
14.875	16.375	0.75
14.875	16.5	0.688
14.875	16.5	0.75
14.875	16.75	0.688
14.875	16.75	0.875
14.875	16.875	0.5
14.875	16.875	0.75
14.875	16.875	0.813
14.875	16.875	0.875
14.875	16.875	0.938
14.875	16.875	1
14.875	16.875	1.219
14.875	17	0.813
14.875	17	0.875
14.875	17.5	0.875
14.906	17	0.828
14.906	17	0.875
14.938	16.438	0.75
15	16	0.5
15	16.25	0.625
15	16.25	0.813
15	16.375	0.531
15	16.5	0.625
15	16.5	0.688
15	16.5	0.75
15	16.5	0.813
15	16.5	1.25
15	16.75	0.75
15	16.75	0.813
15	16.875	0.75

Please use size tables in section *Size options of heavy industrial seals* on ***page 200*** to determine your required seal type and size.

Principal dimensions

d1	D	B
15	17	0.5
15	17	0.625
15	17	0.75
15	17	0.813
15	17	0.875
15	17	1
15	17	1.188
15	17	1.25
15	17.25	0.813
15	17.25	0.875
15	17.5	0.813
15	17.5	0.875
15	17.5	0.938
15	17.5	1
15	17.5	1.25
15	17.75	0.813
15	17.75	0.875
15.109	16.75	0.75
15.125	16.75	0.75
15.125	17.125	0.625
15.125	17.125	0.75
15.156	17.125	0.984
15.156	17.156	0.813
15.188	17.188	0.75
15.25	16.25	0.5
15.25	16.563	0.781
15.25	16.625	0.531
15.25	16.75	0.688
15.25	16.75	0.75
15.25	16.969	0.859
15.25	17.25	0.625
15.25	17.25	0.75
15.25	17.25	0.813
15.25	17.25	0.875
15.25	17.25	1
15.313	16.875	0.688
15.313	17.313	0.688
15.313	17.313	0.813
15.359	16.891	0.75
15.359	17.719	0.688
15.375	16.75	0.531
15.375	16.75	0.75
15.375	16.875	0.75
15.375	17.125	0.813
15.375	17.25	0.688
15.375	17.25	0.75
15.375	17.25	0.813
15.375	17.375	0.688
15.375	17.375	0.813
15.375	17.375	1
15.438	16.938	0.75
15.438	17.469	0.75
15.5	16.5	0.5
15.5	16.75	0.563
15.5	16.813	0.781
15.5	16.875	0.625
15.5	17	0.75
15.5	17.25	0.75
15.5	17.25	0.766
15.5	17.375	0.813
15.5	17.5	0.75
15.5	17.5	0.813
15.5	17.5	0.875
15.5	17.5	0.906
15.5	17.75	0.813
15.5	17.75	1
15.5	18	0.813
15.5	18	1
15.563	16.563	0.5
15.563	16.938	0.703
15.625	17.25	0.75
15.625	17.5	0.875
15.625	17.625	0.813
15.625	17.625	0.875

d_1	D	B
15.688	16.938	0.75
15.75	16.75	0.5
15.75	17	0.625
15.75	17	0.75
15.75	17.063	0.781
15.75	17.25	0.563
15.75	17.25	0.578
15.75	17.25	0.688
15.75	17.25	0.75
15.75	17.313	0.688
15.75	17.5	0.688
15.75	17.5	0.75
15.75	17.5	0.781
15.75	17.5	0.813
15.75	17.719	0.813
15.75	17.75	0.625
15.75	17.75	0.688
15.75	17.75	0.75
15.75	17.75	0.813
15.75	17.75	0.875
15.75	18	0.813
15.75	18	0.875
15.75	18.109	0.984
15.75	18.5	1
15.813	17.438	0.813
15.875	17.375	0.75
15.875	17.5	0.75
15.875	17.75	0.875
15.875	17.875	0.75
15.875	17.875	0.813
15.875	18	0.984
15.938	17.313	0.625
15.938	17.438	0.75
15.938	17.938	0.75
15.938	17.938	0.875
15.938	18	0.75
16	17	0.5
16	17.313	0.781
16	17.406	0.609
16	17.5	0.688
16	17.5	0.75
16	17.625	0.688
16	17.625	0.75
16	17.75	0.75
16	17.875	0.75
16	18	0.5
16	18	0.75
16	18	0.813
16	18	0.875
16	18	1
16	18	1.125
16	18.125	0.875
16	18.5	0.813
16	19	0.75
16.063	17.063	0.5
16.094	17.5	0.75
16.125	17.125	0.5
16.125	17.625	0.75
16.125	18.125	0.75
16.125	18.125	0.813
16.141	18.141	0.813
16.188	17.438	0.75
16.188	18.188	0.813
16.25	17.25	0.5
16.25	17.75	0.625
16.25	17.75	0.688
16.25	17.75	0.75
16.25	17.75	0.875
16.25	18	0.625
16.25	18	0.688
16.25	18	0.75
16.25	18	0.813
16.25	18	1
16.25	18.25	0.688

d_1	D	B
16.25	18.25	0.75
16.25	18.25	0.813
16.25	18.25	1
16.25	18.5	0.813
16.25	18.5	1.25
16.375	17.375	0.5
16.375	17.875	0.688
16.375	17.875	0.75
16.375	18.375	0.813
16.375	18.375	1
16.5	17.5	0.5
16.5	17.75	0.75
16.5	17.875	0.75
16.5	18	0.625
16.5	18	0.688
16.5	18	0.75
16.5	18.25	0.75
16.5	18.5	0.625
16.5	18.5	0.75
16.5	18.5	0.813
16.5	18.5	0.875
16.5	18.5	0.906
16.5	18.5	1
16.5	19	0.813
16.5	19	0.875
16.531	18.031	0.75
16.563	18.124	0.75
16.625	17.625	0.5
16.625	18.125	0.75
16.625	18.5	0.75
16.625	18.625	0.813
16.688	18.031	0.75
16.75	18	0.75
16.75	18.063	0.781
16.75	18.25	0.688
16.75	18.25	0.75
16.75	18.5	0.688
16.75	18.5	0.875
16.75	18.75	0.75
16.75	18.75	0.813
16.75	19	0.813
16.75	19	0.875
16.75	19	0.906
16.875	18.375	0.75
16.875	18.875	0.813
17	18	0.5
17	18.25	0.5
17	18.25	0.563
17	18.25	0.625
17	18.25	0.75
17	18.313	0.781
17	18.5	0.625
17	18.5	0.688
17	18.5	0.719
17	18.5	0.75
17	18.5	0.875
17	18.75	0.75
17	19	0.625
17	19	0.75
17	19	0.813
17	19	0.875
17	19	1
17	19.25	0.813
17	19.25	1
17	19.5	0.813
17	19.5	0.875
17.125	18.125	0.5
17.125	18.625	0.75
17.125	19.094	0.906
17.125	19.125	0.813
17.25	18.5	0.625
17.25	18.75	0.625
17.25	18.75	0.688
17.25	18.75	0.75

d_1	D	B
17.25	19.25	0.75
17.25	19.25	0.813
17.25	19.25	0.875
17.25	19.25	0.938
17.313	18.313	0.5
17.313	19.063	0.75
17.313	19.313	0.875
17.359	19.359	0.813
17.375	18.875	0.75
17.406	18.406	0.5
17.5	18.5	0.5
17.5	18.75	0.5
17.5	18.906	0.766
17.5	19	0.625
17.5	19	0.688
17.5	19	0.75
17.5	19	0.813
17.5	19.25	0.625
17.5	19.25	0.688
17.5	19.25	0.75
17.5	19.5	0.688
17.5	19.5	0.75
17.5	19.5	0.813
17.5	19.75	0.75
17.5	19.75	0.813
17.5	20	0.75
17.563	19.063	0.75
17.625	19.125	0.75
17.625	19.25	0.688
17.625	19.375	0.75
17.625	19.625	0.688
17.625	19.625	0.813
17.688	19.188	1
17.688	19.688	0.906
17.719	19.219	0.75
17.719	20.078	0.984
17.75	18.75	0.5
17.75	19	0.75
17.75	19.25	0.75
17.75	19.375	0.75
17.75	19.5	0.625
17.75	19.75	0.75
17.75	19.75	0.813
17.75	19.75	1
17.75	20.078	0.875
17.797	19.797	0.813
17.875	18.875	0.5
17.875	19.5	0.625
17.875	19.875	0.75
17.875	19.875	0.813
17.875	19.875	0.844
17.938	19.313	0.813
18	19	0.5
18	19.313	0.781
18	19.438	0.5
18	19.5	0.688
18	19.5	0.75
18	19.5	0.813
18	19.5	1
18	19.5	1.25
18	19.625	0.813
18	19.75	0.688
18	19.75	0.75
18	19.75	0.813
18	19.875	0.688
18	19.875	0.75
18	20	0.625
18	20	0.75
18	20	0.813
18	20	0.875
18	20	1
18	20.25	0.813
18	20.25	1
18	20.5	0.813

Please use size tables in section *Size options of heavy industrial seals* on ***page 200*** to determine your required seal type and size.

d_1 **18–22.5** in

Principal dimensions

d1	D	B
18	20.5	0.875
18	20.5	1.25
18	21	0.688
18	21	0.75
18	21	0.875
18.031	20.031	0.813
18.063	20.063	0.813
18.11	20.078	0.813
18.11	20.109	0.813
18.125	19.625	0.75
18.125	19.75	0.75
18.125	20.094	0.859
18.125	20.5	0.875
18.125	20.5	1
18.25	19.75	0.688
18.25	19.75	0.75
18.25	19.875	0.688
18.25	19.875	0.75
18.25	19.875	1
18.25	20.25	0.813
18.25	21.25	0.75
18.375	19.375	0.5
18.375	19.875	0.688
18.375	19.875	0.75
18.375	19.938	0.625
18.375	19.938	0.688
18.375	20	0.75
18.375	20.063	0.781
18.375	20.078	0.75
18.375	20.375	0.813
18.375	20.375	0.875
18.375	20.5	0.75
18.375	20.5	0.875
18.438	20.5	0.813
18.5	19.5	0.5
18.5	19.813	0.781
18.5	19.875	0.75
18.5	20	0.688
18.5	20	0.75
18.5	20.25	0.688
18.5	20.25	0.75
18.5	20.438	0.859
18.5	20.5	0.75
18.5	20.5	0.813
18.5	20.5	0.875
18.5	20.5	1
18.5	21	0.875
18.531	20.469	0.859
18.625	19.875	0.75
18.625	20.125	0.75
18.625	20.625	0.813
18.688	20.656	0.859
18.703	20.703	1
18.75	19.75	0.5
18.75	20	0.5
18.75	20.25	0.5
18.75	20.25	0.75
18.75	20.25	0.813
18.75	20.25	1
18.75	20.5	0.75
18.75	20.75	0.75
18.75	20.75	0.813
18.75	20.75	0.875
18.875	20.469	0.781
18.875	20.844	0.859
18.875	20.875	0.813
18.938	20.5	0.781
18.938	20.938	0.813
19	20	0.5
19	20.203	0.531
19	20.313	0.781
19	20.5	0.75
19	20.5	1.031
19	20.5	1.047

d_1	D	B
19	21	0.5
19	21	0.75
19	21	0.781
19	21	0.813
19	21	0.875
19	21	1
19	21.5	0.75
19	21.5	0.875
19.125	20.125	0.5
19.125	21.125	0.813
19.188	20.938	0.625
19.188	21.188	0.813
19.25	20.25	0.5
19.25	20.75	0.75
19.25	21	0.75
19.25	21	0.813
19.25	21.25	0.75
19.25	21.25	0.813
19.375	20.375	0.5
19.375	20.875	0.75
19.375	21	0.75
19.375	21	0.813
19.375	21.375	0.813
19.5	20.5	0.5
19.5	21	0.75
19.5	21.25	0.813
19.5	21.5	0.5
19.5	21.5	0.625
19.5	21.5	0.75
19.5	21.5	0.813
19.5	21.5	0.875
19.5	21.688	0.75
19.5	21.688	0.875
19.5	21.75	0.875
19.625	21.078	0.5
19.625	21.078	0.531
19.625	21.125	0.5
19.625	21.375	0.75
19.625	21.625	0.813
19.688	21.188	0.75
19.688	21.438	0.875
19.688	21.672	0.813
19.688	21.688	0.813
19.75	20.75	0.5
19.75	21.25	0.75
19.75	21.75	0.813
19.75	21.75	0.875
19.75	22	0.813
19.75	22.125	0.875
19.75	22.25	0.875
19.812	21.75	0.781
19.875	21.875	0.813
19.875	22	0.813
19.875	22	0.875
19.938	21.188	0.625
19.938	21.5	0.75
19.938	21.688	0.625
19.938	21.688	0.75
20	21	0.5
20	21.25	0.625
20	21.313	0.781
20	21.5	0.625
20	21.5	0.688
20	21.5	0.75
20	21.5	0.875
20	21.75	0.75
20	21.75	0.813
20	21.969	0.766
20	22	0.625
20	22	0.75
20	22	0.813
20	22	0.875
20	22	1
20	22.125	1

d_1	D	B
20	22.5	0.875
20.063	21.625	0.781
20.063	21.656	0.688
20.063	22.063	0.813
20.078	22.078	0.813
20.109	22.109	0.813
20.125	22.125	0.75
20.125	22.125	0.813
20.141	22.25	0.875
20.187	22.188	0.813
20.234	22.234	0.813
20.25	21.25	0.5
20.25	21.75	0.75
20.25	21.813	0.781
20.25	22.25	0.813
20.25	22.25	0.875
20.25	22.375	0.75
20.25	22.375	1
20.25	22.5	0.75
20.25	22.5	0.875
20.375	22.188	0.813
20.437	22.063	0.813
20.438	22.5	0.75
20.438	22.5	0.813
20.469	21.969	0.75
20.47	22.469	0.813
20.5	21.5	0.5
20.5	21.813	0.781
20.5	22	0.625
20.5	22	0.75
20.5	22	0.953
20.5	22.25	0.813
20.5	22.5	0.625
20.5	22.5	0.75
20.5	22.5	0.813
20.5	22.5	0.875
20.5	22.5	1
20.5	22.75	0.875
20.516	22.516	0.813
20.625	22.125	0.75
20.625	22.625	0.813
20.75	22.25	0.75
20.75	22.75	0.75
20.75	22.75	0.813
20.75	22.75	0.875
20.75	22.75	1
20.75	23	0.813
20.75	23	0.875
20.828	23.828	0.813
20.875	22.875	0.75
20.875	22.875	0.813
20.875	22.875	0.875
21	22	0.5
21	22.313	0.781
21	22.5	0.75
21	22.75	0.75
21	23	0.625
21	23	0.75
21	23	0.813
21	23	0.875
21	23.25	0.813
21	23.25	0.875
21	23.5	0.875
21.125	22.125	0.5
21.125	23.125	0.813
21.25	22.25	0.5
21.25	22.75	0.75
21.25	23	0.75
21.25	23.25	0.625
21.25	23.25	0.75
21.25	23.25	0.813
21.25	23.25	0.875
21.313	22.75	0.703
21.375	23.375	0.813

d_1	D	B
21.437	23.375	0.859
21.437	23.437	0.813
21.438	23.188	0.75
21.5	22.5	0.5
21.5	22.688	0.75
21.5	22.75	0.75
21.5	23	0.625
21.5	23	0.75
21.5	23	1
21.5	23.25	0.75
21.5	23.25	0.813
21.5	23.5	0.5
21.5	23.5	0.75
21.5	23.5	0.813
21.5	23.5	0.875
21.5	23.625	0.875
21.5	23.75	0.875
21.5	24	0.875
21.625	23.375	0.75
21.625	23.625	0.813
21.625	23.625	0.859
21.625	23.625	0.875
21.625	23.625	1
21.688	23.188	0.75
21.75	23.063	0.781
21.75	23.25	0.75
21.75	23.25	1
21.75	23.5	0.75
21.75	23.75	0.75
21.75	23.75	0.813
21.75	23.75	0.875
21.75	24	0.875
21.75	24.25	0.875
21.75	24.5	0.875
21.75	24.75	0.875
21.75	24.75	1
21.875	23.875	0.813
21.938	22.938	0.5
22	23	0.5
22	23.5	0.5
22	23.5	0.75
22	23.5	1
22	23.75	0.813
22	23.75	0.875
22	24	0.75
22	24	0.813
22	24	0.875
22	24	1
22	24.25	0.813
22	24.25	0.875
22	24.25	1
22	24.5	0.875
22.047	24.016	0.875
22.062	24	0.859
22.063	24.063	0.813
22.125	23.875	0.75
22.125	24.125	0.813
22.25	24.25	0.813
22.25	24.25	0.875
22.25	24.5	0.875
22.375	24.25	0.75
22.375	24.375	0.875
22.375	25.25	0.875
22.375	25.25	1.125
22.438	24	0.75
22.438	24.25	0.75
22.438	24.375	0.859
22.438	24.438	0.75
22.438	24.438	0.875
22.438	24.5	0.75
22.5	23.5	0.5
22.5	23.688	0.75
22.5	24	0.75
22.5	24.25	0.75

Please use size tables in section *Size options of heavy industrial seals* on ***page 200*** to determine your required seal type and size.

Principal dimensions

d1	D	B
22.5	24.25	0.875
22.5	24.25	0.984
22.5	24.5	0.75
22.5	24.5	0.813
22.5	24.5	0.875
22.5	24.75	0.875
22.5	25	0.875
22.625	24.125	0.5
22.625	24.375	0.781
22.625	24.625	0.813
22.672	24.172	0.75
22.688	24.563	0.75
22.75	24.328	0.578
22.75	24.5	0.75
22.75	24.75	0.813
22.75	24.75	0.875
22.75	25	0.875
22.75	25.5	0.875
22.813	24.25	0.625
22.813	24.313	0.75
22.813	24.75	0.859
22.813	24.813	0.813
22.875	24.875	0.813
22.938	24.938	0.813
23	24	0.5
23	24.25	0.75
23	24.5	0.75
23	24.75	0.75
23	25	0.813
23	25	0.875
23	25.375	0.875
23	25.5	0.875
23	25.5	1
23.16	24.609	0.75
23.188	24.5	0.781
23.188	25.188	0.813
23.25	24.563	0.781
23.25	24.75	0.75
23.25	25	0.75
23.25	25.25	0.75
23.25	25.25	0.813
23.25	25.343	1
23.375	24.875	0.75
23.375	25.375	0.75
23.375	25.375	0.813
23.375	25.375	0.875
23.375	25.375	1
23.5	24.5	0.5
23.5	24.813	0.781
23.5	25.25	0.75
23.5	25.5	0.75
23.5	25.5	0.813
23.5	25.5	0.875
23.5	25.5	1
23.563	25.25	0.75
23.563	25.375	0.75
23.594	25.094	0.75
23.625	25.125	0.75
23.625	25.563	0.859
23.625	25.625	0.813
23.625	25.75	0.875
23.625	26	0.875
23.75	25.25	0.75
23.75	25.25	0.875
23.75	25.25	1
23.75	25.75	0.813
23.75	25.75	0.875
23.75	25.75	1
23.875	24.875	0.5
23.875	26	0.875
24	25	0.5
24	25.5	0.75
24	25.5	1
24	25.625	0.813

d_1	D	B
24	25.938	0.859
24	26	0.75
24	26	0.813
24	26	0.875
24	26.25	0.875
24	26.25	1
24	26.5	0.875
24	26.5	1
24	27	0.875
24.094	26.094	0.813
24.125	25.125	0.5
24.125	26	0.813
24.25	25.25	0.5
24.25	25.625	0.563
24.25	25.75	0.75
24.25	25.75	1
24.25	26	1
24.25	26.25	0.813
24.25	26.25	0.875
24.25	26.25	1
24.25	26.75	1
24.25	26.766	0.984
24.375	25.625	0.625
24.375	26.375	0.75
24.375	26.375	0.875
24.438	26	0.75
24.438	26.438	0.75
24.438	26.438	0.813
24.5	25.5	0.5
24.5	25.813	0.781
24.5	26	0.75
24.5	26.25	0.813
24.5	26.5	0.813
24.5	26.5	0.875
24.609	26.109	1
24.625	25.875	0.563
24.641	25.641	0.5
24.75	25.75	0.5
24.75	26.75	0.625
24.75	26.75	0.813
24.813	26.813	0.813
24.875	26.375	1
24.875	26.875	0.813
24.938	26.938	0.813
25	26	0.5
25	26.25	0.625
25	26.5	0.75
25	26.5	0.875
25	26.5	1
25	26.811	0.813
25	26.875	0.75
25	27	0.75
25	27	0.813
25	27	0.875
25	27	0.906
25	27	1
25	27.25	0.875
25	27.375	0.875
25	27.5	0.875
25	27.5	1
25.125	26.125	0.5
25.125	26.75	0.75
25.188	26.781	0.781
25.188	26.875	0.75
25.188	26.938	0.75
25.188	27.188	0.813
25.203	27.172	0.813
25.219	27.219	0.813
25.25	26.75	0.75
25.25	27.25	0.75
25.25	27.25	0.813
25.25	27.25	0.875
25.25	28	0.875
25.375	26.875	0.563

d_1	D	B
25.375	27.375	0.75
25.375	27.375	0.813
25.438	27.188	0.75
25.5	26.5	0.5
25.5	27	0.75
25.5	27	0.875
25.5	27	1
25.5	27.5	0.75
25.5	27.5	0.813
25.5	27.5	0.875
25.5	27.5	0.938
25.5	28	1
25.531	27.031	0.75
25.563	28.063	0.984
25.625	26.625	0.5
25.625	26.875	0.625
25.625	27.625	0.813
25.625	27.75	1
25.75	26.75	0.5
25.75	27	0.5
25.75	27	0.625
25.75	27.25	0.75
25.75	27.75	0.813
25.75	28.125	0.75
25.875	26.875	0.5
25.875	27.875	0.813
25.875	28	0.875
25.875	28	1
25.938	28	0.75
25.984	28.156	0.813
26	27	0.5
26	27.25	0.625
26	27.313	0.781
26	27.5	0.75
26	27.5	1
26	27.625	0.75
26	27.625	1
26	28	0.75
26	28	0.813
26	28	0.875
26	28	1
26	28.125	0.875
26	28.5	0.875
26.125	27.625	0.75
26.125	27.625	0.875
26.125	28.125	0.813
26.125	28.125	0.875
26.125	28.125	1
26.188	28.688	0.984
26.219	27.219	0.5
26.25	28.25	0.813
26.297	27.797	1
26.375	28.188	0.813
26.375	28.188	0.875
26.375	28.25	0.875
26.375	28.375	0.813
26.375	28.375	1
26.438	28.438	0.813
26.5	28	0.75
26.5	28	0.875
26.5	28.5	0.813
26.5	28.5	0.875
26.625	28.125	0.75
26.688	28.688	0.813
26.75	28.563	0.813
26.75	28.75	0.813
26.75	29.25	0.984
26.781	28.781	0.813
26.813	28.813	0.813
26.875	28.125	0.5
26.875	28.875	0.813
27	28	0.5
27	28.313	0.781
27	28.5	0.625

d_1	D	B
27	28.5	0.75
27	29	0.75
27	29	0.813
27	29	0.875
27	29	1
27	29.5	0.875
27	29.5	1
27	30	0.875
27.125	29.625	0.75
27.25	29.25	0.813
27.25	29.25	0.875
27.375	29.375	0.813
27.5	29	0.75
27.5	29.5	0.75
27.5	29.5	0.813
27.5	29.5	0.875
27.5	29.5	1
27.563	29.563	0.813
27.625	29.125	0.75
27.625	29.625	0.75
27.75	29.75	0.813
27.844	29.844	0.875
27.875	29.813	0.875
27.875	29.875	0.813
27.953	29.953	0.813
27.969	29.969	0.813
28	29.25	0.625
28	29.5	0.75
28	29.5	1
28	29.625	0.75
28	29.813	0.75
28	30	0.813
28	30	0.875
28	30	1
28	30.25	0.813
28	30.25	1.25
28	30.5	0.875
28	30.5	0.984
28	30.5	1
28	31	0.875
28.188	30.688	0.984
28.25	29.5	0.625
28.25	29.75	1
28.25	30.25	0.813
28.25	30.25	1.25
28.484	29.859	0.688
28.484	30.844	0.984
28.5	29.5	0.5
28.5	30.5	0.625
28.5	30.5	0.75
28.5	30.5	0.813
28.5	30.5	0.875
28.5	31	0.75
28.5	31	0.875
28.625	30.625	0.813
28.75	29.75	0.5
28.75	30.75	0.813
28.75	30.75	0.875
28.875	30.875	0.813
29	30.5	0.75
29	31	0.813
29	31	0.875
29	31	1
29	31.5	0.875
29	31.5	1
29	32	0.875
29.25	30.25	0.5
29.25	30.75	1
29.25	31.25	0.813
29.375	31.125	0.75
29.375	31.375	0.813
29.5	30.5	0.5
29.5	31	1
29.5	31.5	0.75

Please use size tables in section *Size options of heavy industrial seals* on ***page 200*** to determine your required seal type and size.

d_1 **29.5–39.5** in

Principal dimensions

d1	D	B
29.5	31.5	0.813
29.5	31.5	0.875
29.5	31.5	1
29.5	31.875	0.984
29.5	32	0.75
29.5	32	0.875
29.5	32	1
29.5	32.25	0.875
29.5	32.25	1
29.5	32.5	0.875
29.5	32.5	0.938
29.563	31.563	0.813
29.625	31.625	0.813
29.688	31.688	0.813
29.75	31.75	0.75
29.75	31.75	0.875
29.75	32.25	0.75
29.875	31.875	0.813
29.906	30.906	0.5
29.906	31.906	0.813
29.938	31.938	0.875
29.968	31.969	0.813
30	31	0.5
30	31.25	0.5
30	31.5	0.75
30	31.625	0.625
30	31.625	0.75
30	32	0.75
30	32	0.813
30	32	0.875
30	32	1
30	32	1.25
30	32.25	0.875
30	32.25	1.156
30	32.5	0.875
30	32.5	1
30	32.75	0.875
30	33	0.875
30.125	31.125	0.5
30.25	32.25	0.813
30.25	32.25	0.875
30.25	32.5	0.875
30.25	32.5	1
30.313	31.813	0.75
30.313	32.375	0.875
30.375	32.375	0.813
30.5	32.281	0.875
30.5	32.5	0.75
30.5	32.5	0.813
30.5	32.5	0.875
30.5	32.5	1
30.5	33	0.75
30.5	33	0.875
30.5	33	1
30.5	33.5	0.875
30.563	32.563	0.813
30.75	31.75	0.5
30.75	32.75	0.875
30.75	32.75	1.25
31	32	0.5
31	32.5	0.563
31	32.5	0.75
31	32.5	0.875
31	32.5	1
31	33	0.813
31	33	0.875
31	33	1
31	33	1.25
31	33.5	0.875
31	34	0.875
31.25	32.75	0.75
31.25	33.25	0.75
31.375	33.25	0.625
31.375	33.25	0.75

d_1	D	B
31.5	32.5	0.5
31.5	32.75	0.5
31.5	33	0.75
31.5	33.5	0.813
31.5	33.5	1.25
31.5	34	0.906
31.75	32.75	0.5
31.75	33.063	0.781
31.75	33.25	0.75
31.75	33.25	1
31.75	33.75	0.75
31.75	33.75	0.813
31.75	33.75	0.875
31.75	33.75	1.25
31.874	34.375	0.984
31.875	34.375	0.984
31.89	33.203	0.781
31.89	33.859	0.984
31.89	33.891	0.813
31.89	34.25	0.984
32	33	0.5
32	34	0.813
32	34	0.875
32	34	1.25
32	34.5	0.875
32.125	33.625	0.625
32.125	34.125	0.813
32.125	34.125	0.875
32.125	34.625	0.875
32.125	34.688	0.75
32.156	34.25	0.75
32.188	34.188	0.813
32.203	34.203	1.25
32.25	33.562	0.781
32.25	33.625	0.625
32.25	34.25	0.813
32.281	34.25	0.984
32.313	34.5	0.875
32.375	33.625	0.5
32.375	33.625	0.625
32.375	34.375	1
32.375	34.875	0.875
32.5	33.813	0.781
32.5	34.5	0.813
32.5	34.5	0.875
32.5	34.5	1
32.5	34.5	1.25
32.688	33.938	0.5
32.688	34.688	0.813
32.75	34.25	0.75
32.75	34.5	0.875
32.75	34.75	0.813
32.75	35	0.875
32.969	34.625	0.75
32.984	33.984	0.5
33	34	0.5
33	34.5	0.625
33	34.5	0.75
33	34.609	0.75
33	34.625	0.75
33	34.625	0.781
33	34.688	0.75
33	34.938	0.813
33	35	0.75
33	35	0.813
33	35	0.875
33	35.25	0.875
33	35.5	0.75
33	35.5	0.875
33	36	1
33.25	35.25	0.75
33.25	35.25	0.813
33.438	35.438	0.781
33.5	35	0.875

d_1	D	B
33.5	35.438	0.781
33.5	35.5	0.813
33.5	35.5	0.875
33.5	35.625	0.875
33.5	35.75	0.875
33.5	36	0.875
33.5	36	0.938
33.5	36.25	0.875
33.625	35.594	0.938
33.625	35.625	0.875
33.75	35.75	0.813
33.858	36.219	0.984
33.859	35.859	0.813
33.938	35.469	0.813
34	35	0.5
34	35.5	0.75
34	36	0.75
34	36	0.813
34	36	0.875
34	36.25	1.25
34	36.5	0.75
34	36.5	0.813
34	36.5	0.875
34	36.5	0.984
34	37	0.875
34	37	1
34.25	36.25	0.813
34.25	36.25	0.875
34.25	36.75	0.875
34.5	36	0.75
34.5	36.5	0.75
34.5	36.5	0.813
34.5	36.5	0.875
34.5	36.5	1
34.5	36.5	1.25
34.5	37.5	0.875
34.625	37	0.813
34.75	36.625	0.75
34.75	36.75	0.875
35	36	0.5
35	36.5	0.625
35	36.5	0.75
35	37	0.813
35	37	0.875
35	37.5	0.813
35	37.5	0.875
35	38	0.875
35.063	37.563	0.984
35.25	37.25	0.875
35.25	38.25	0.75
35.25	38.25	0.813
35.375	36.625	0.625
35.375	37.375	0.813
35.375	37.375	0.875
35.375	37.375	1
35.438	37.438	0.813
35.5	36.813	0.781
35.5	37.5	0.813
35.5	37.5	0.875
35.5	37.5	1
35.5	38	1
35.75	37.75	0.813
36	37	0.5
36	37.5	0.75
36	38	0.75
36	38	0.813
36	38	0.875
36	38	1
36	38	1.25
36	38.5	0.875
36	38.5	1
36.031	38.031	0.813
36.219	37.531	0.781
36.219	37.719	0.75

d_1	D	B
36.5	38	0.75
36.5	38.25	0.813
36.5	38.438	0.813
36.5	38.438	1
36.5	38.5	0.813
36.5	38.5	0.875
36.5	38.5	1
36.5	39	0.75
36.5	39	0.813
36.625	38.625	0.813
36.75	38.75	0.813
36.75	38.75	0.875
36.75	38.75	1
36.75	39.25	0.875
37	38	0.5
37	38.5	1
37	39	0.813
37	39	0.875
37	39	1
37	39	1.25
37	39.25	0.875
37.125	39.125	1.25
37.25	39.25	0.813
37.25	39.25	0.875
37.375	38.625	0.5
37.375	39.375	0.813
37.437	39.5	0.875
37.5	39	0.75
37.5	39	0.875
37.5	39.5	0.75
37.5	39.5	0.813
37.5	40.25	1
37.797	40.156	0.875
37.813	39.813	0.813
37.875	39.875	1.25
38	39	0.5
38	39.5	0.75
38	39.5	0.875
38	40	0.625
38	40	0.813
38	40	0.875
38	40	1
38	40	1.25
38	41	0.875
38.25	40.25	0.813
38.25	40.25	0.875
38.25	40.75	0.75
38.25	40.75	0.875
38.25	41.25	0.875
38.359	40.75	0.875
38.5	40.5	0.813
38.5	40.75	0.75
38.5	41	0.875
38.5	41	1
38.75	40.688	0.813
38.75	40.75	0.813
38.75	40.75	0.875
38.75	41	0.875
38.937	41	0.875
39	40	0.5
39	40.938	1
39	41	0.75
39	41	0.813
39	41	0.875
39	41	1
39	41	1.25
39	41.5	0.75
39	41.5	0.875
39.25	40.75	0.75
39.25	41.25	0.813
39.5	40.5	0.5
39.5	40.813	0.781
39.5	41.5	0.813
39.5	41.5	1.25

Please use size tables in section *Size options of heavy industrial seals* on ***page 200*** to determine your required seal type and size.

Principal dimensions

d1	D	B
39.688	41.75	0.813
39.75	41.75	0.813
39.75	42.25	0.875
40	41.5	0.75
40	42	0.813
40	42	0.875
40	42	1
40	42.5	0.875
40	42.5	1
40.25	41.25	0.5
40.25	41.75	0.75
40.266	41.766	0.75
40.5	41.5	0.5
40.5	42	0.75
40.5	42.5	0.813
40.5	42.5	0.875
40.5	42.5	1
40.5	43	0.875
40.531	42.281	0.875
40.75	42	0.688
40.75	42	0.75
41	42.313	0.781
41	42.5	0.75
41	43	0.813
41	43	1.25
41.125	42.438	0.781
41.125	43.125	1
41.25	42.75	0.75
41.25	43.25	0.75
41.313	43.813	0.984
41.375	43.375	0.813
41.5	43	0.75
41.5	43	1
41.5	43.5	0.875
41.5	43.5	1.25
41.5	43.75	0.875
41.625	43.625	0.813
41.625	44	0.875
41.875	43.188	0.781
41.875	43.5	1
41.938	43.75	0.875
42	43.5	1
42	44	0.813
42.063	44.063	0.813
42.25	44.25	0.813
42.25	44.25	1
42.375	44.375	0.75
42.5	43.5	0.5
42.5	44.25	0.875
42.5	44.5	0.75
42.5	44.5	0.813
42.5	45	0.75
42.5	45	0.875
42.5	45.5	0.875
42.75	43.75	0.5
42.75	44.25	0.75
43	45	0.75
43	45	0.813
43	45	0.875
43	45.5	0.875
43.125	44.625	0.75
43.5	45	0.75
43.5	45.5	0.75
43.5	45.5	0.875
43.563	45.563	1
43.75	45.75	0.875
43.938	45.438	0.75
44	45.5	0.75
44	46	0.813
44	46	0.875
44	46	1.25
44	46.5	0.875
44	47	0.875
44	47	1.25

d_1	D	B
44.094	46.063	0.813
44.5	46	0.75
44.5	46	0.875
44.5	46.5	0.813
45	46.5	0.75
45	46.625	1
45	46.75	0.875
45	47	0.75
45	47	0.813
45	47	0.875
45.031	46.531	0.75
45.125	47.125	0.813
45.25	47.125	0.813
45.5	47	0.75
45.75	47.75	0.75
45.75	47.766	0.875
46	48	0.813
46	48	0.875
46.25	47.75	0.75
46.25	48.25	0.813
46.5	48.5	0.875
46.5	48.5	1.25
47	49	0.813
47	49	0.875
47.25	49.25	0.813
47.375	48.875	0.75
47.5	48.813	0.781
47.5	49.5	0.875
47.5	49.5	1.25
47.75	49.75	0.813
47.75	50.5	1.125
47.875	49.875	0.813
48	49.5	0.75
48	50	0.75
48	50	0.813
48	50	0.828
48	50	0.875
48	50	1
48	50	1.25
48.25	49.75	0.75
48.25	50	0.75
48.25	50.25	0.875
48.375	50.375	0.813
48.875	50.875	0.813
49	50.5	0.563
49	50.5	1
49	50.75	1
49	51	0.813
49	51	1.25
49.25	50.75	0.75
49.25	51.125	0.813
49.25	51.25	0.813
49.5	50.75	0.75
49.5	51.25	0.813
49.5	51.5	0.75
49.5	51.5	0.813
49.5	52.25	1
49.625	50.875	0.563
50	51	0.5
50	51.375	0.813
50	51.5	0.75
50	52	0.813
50	52	0.875
50	52.25	0.75
50.5	52.5	0.813
51	52	0.5
51	52.875	0.813
51	53	0.75
51	53	0.813
51.25	53.25	0.875
51.5	53.5	0.781
51.5	53.5	1.25
52	53	0.5
52	54	0.75

d_1	D	B
52	54	0.813
52.188	54.188	0.813
52.25	54.125	0.813
52.5	54.5	0.813
52.5	55	0.75
52.5	55	0.875
52.875	53.875	0.5
53	54.875	0.813
53	55	0.781
53	55	0.813
53.25	54.25	0.5
53.5	55	0.75
53.625	54.625	0.5
54	56	0.813
54	56	1
54	56	1.25
54.5	56.5	0.813
54.75	56.375	0.875
55	56	0.5
55	56.312	0.781
55	56.5	0.75
55	57	0.813
55	57	1.25
55	57.5	0.813
55.125	58	0.75
55.25	56.5	0.75
55.25	58.25	0.75
55.5	56.5	0.5
55.5	57.5	0.75
55.5	57.5	0.813
55.75	57.75	1.25
55.906	57.875	0.813
56.25	58.125	0.813
57	59	0.813
57	59	0.828
57	60	0.75
57.375	58.875	0.75
57.5	59.5	0.813
57.875	58.875	0.5
57.875	60	0.938
58	60	0.75
58	60	0.813
58.5	60.5	0.813
58.922	61	0.984
59	61	0.875
59.25	61.25	0.813
59.5	61.5	1.25
59.75	60.75	0.5
60	61.5	0.75
60	62	0.75
60	62	0.813
61	63	0.813
61.25	62.25	0.5
61.25	62.75	0.75
61.25	63.25	1
62	63.313	0.781
62	64	0.813
62.25	64.25	0.813
62.5	64	0.875
62.5	64.5	0.875
63	65	0.813
63.375	65.75	0.875
63.5	65.5	0.813
63.75	65.75	0.875
63.781	66.297	0.984
64	65.375	0.875
64	66	0.813
64.5	66.5	0.813
65	67	0.813
65.25	67.25	0.813
66	68	0.813
66.5	68	0.75
66.5	68.5	0.813
66.5	69	0.813

d_1	D	B
67	68.5	0.75
67	69	0.813
68	70	0.75
68	70	0.813
68	70	1
68.5	70.5	0.813
69	71	0.813
69.125	71.125	0.813
69.375	71.375	0.813
70	71	0.5
70	72	0.813
70	72	0.875
70.5	72.5	0.813
70.688	72.688	0.875
71	73	0.813
71.25	73.25	0.813
72.5	74	0.75
73	75	0.813
74	76	0.813
74.5	76	0.75
74.5	76.5	0.813
75	76.5	0.75
75	77	0.813
75	77	1
75.188	77.188	0.813
75.75	77.063	0.781
76	78	0.813
76.25	78.25	0.813
76.5	78.5	0.813
77.5	79.5	0.813
78.25	80	0.625
79.5	81.5	0.813
80	82	0.813
80.5	82.438	0.813
80.5	82.5	0.813
81	83	0.813
82.281	84.25	0.813
84	86	0.5
84	86	0.813
85	87	0.813
85.703	87.016	0.781
86	88	0.813
87	89	0.813
88.031	90.031	0.813
89	91	0.813
93	95	0.813
93.78	95.094	0.781
94	96	0.813
95.875	97.875	0.813
98	99.5	0.75
98.75	100.75	0.813
101.25	103.25	0.813
102	104	0.813
108	110	0.813
110.5	112.5	0.813
112	113.938	0.813
120.063	122.063	0.813
130.266	131.891	1
133.406	135.031	1

Please use size tables in section *Size options of heavy industrial seals* on ***page 200*** to determine your required seal type and size.

Machined seals

TBM 1

TBM 2

TBM 3

Ball mill

Ball mill
crown seal

Special

Special

TBM (Tunnel Boring Machine) seals protecting the cutter head bearing from heavy contamination (sand, rock, water). The seals can also handle different misalignments and pressure steps. One benefit of the SKF seals are the split version – during the maintenance they can be welded on site and without the need to remove the shaft, therefore the downtime can be reduced significantly.

SKF can manufacture a wide variety of seal profiles with different materials and sizes with ist industry-leading SKF SEAL JET production system (see details on **page 56**). For additional information about costomized machined profiles, refer to publication *Customized machined seals – Product range* or contact SKF.

Sealproduction – SKF machine seals

A.3 Cassette seals

20%
LESS FRICTION

SKF Cassette seals

- Maximum protection against liquid or solid contamination
- Extended wheel-end service life
- Reduced friction

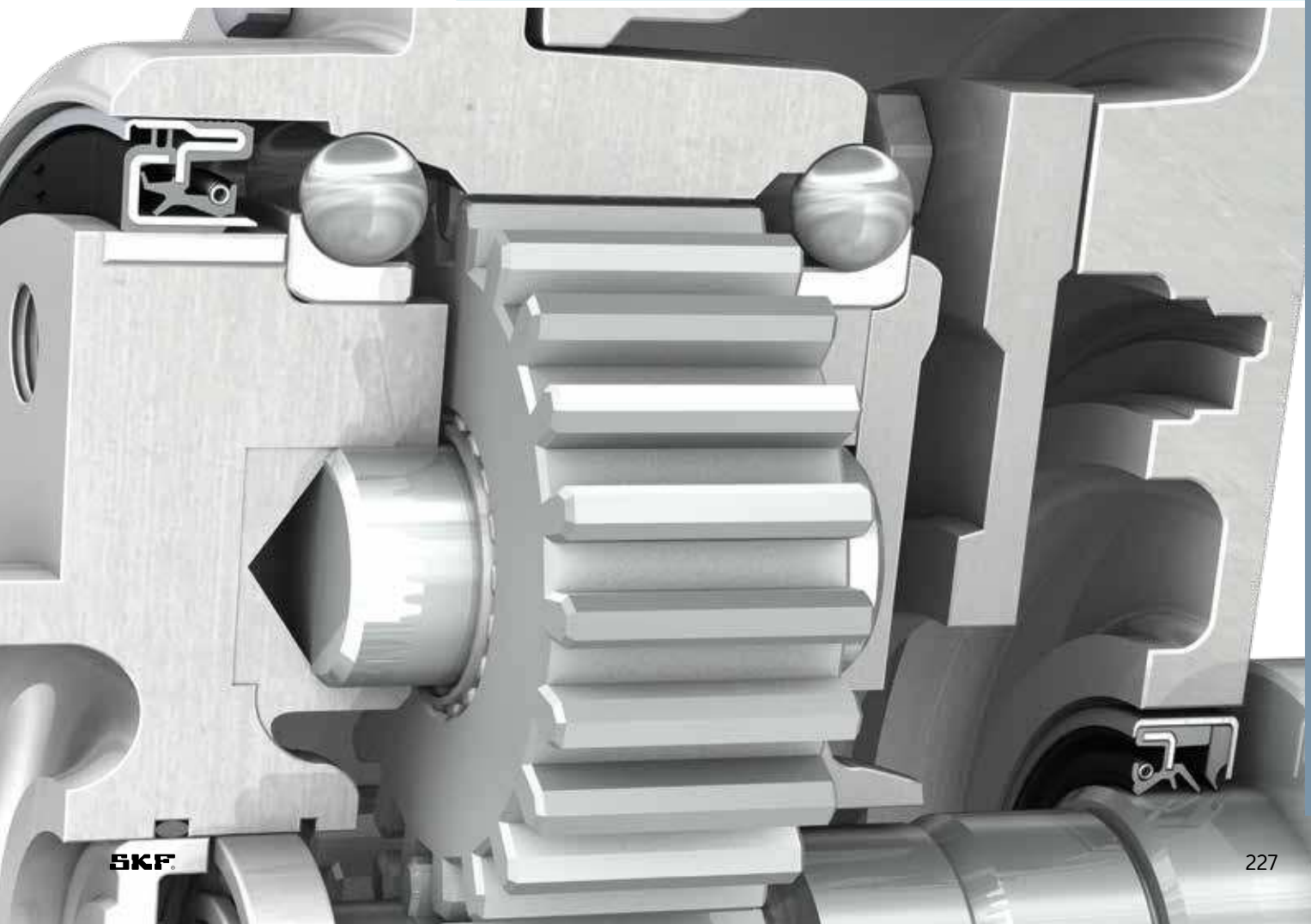

Cassette seals – general

Featuring a utilized, multilip seal design, coupled with a high performance elastomer, SKF Mudblock seals are the latest generation radial shaft sealing units. These seals have their own integrated lip running surface delivering a very high performance in contaminated environment. The design of SKF Mudblock cassette seals has been optimized to provide excellent retention of either grease or oil and maximum protection against liquid or solid contaminants (→ **fig. 1**). The seal designs are selected based on specific application criteria.

Fig. 1

SKF Mudblock designs for oil lubricated applications

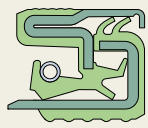

MUD11

SKF Mudblock designs for grease lubricated applications

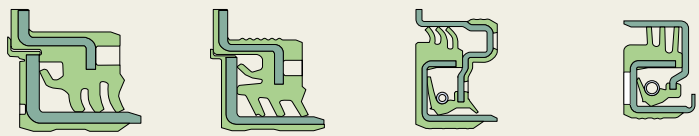

MUD3 MUD6 MUD7 MUD8

SKF Mudblock seals are widely used in low speed wheel-end applications such as the front and rear axles of, for example:

- Tractors
- Agricultural machinery
- Construction equipment
- Forestry equipment
- Off-highway trucks

Design features

All SKF Mudblock seals are designed with an integrated wear sleeve and a rubber inside diameter, but can have any one of a number of sealing lip and auxiliary lip configurations. The sealing lip material normally is nitrile rubber, but the seals are also available in other compounds including fluoro rubber, hydrogenated nitrile rubber or polyacrylate to meet the demands of different operating conditions. For more information, please refer to paragraph *Sealing materials*, starting on **page 31**.

Interchangeable and easy to handle and install

Fully interchangeable with alternative seal designs available in the market, the SKF Mudblock seals offer OEMs a range of extensively tested, pre-validated sealing retrofit options. The seals feature an integrated sleeve as the main lip counterface, which eliminates the need for costly shaft machining operations like grinding and hardening. The seal and sleeve are also unitized with a curled design feature that helps prevent damage during transportation, handling and installation. Additionally, SKF Mudblock seals do not require specific assembly tools.

Testing

SKF conducts mud shary tests of the SKF Mudblock seals at global testing facilities in USA, Europe and Asia. The tests include both our own tests and tests according to customer specifications (→ **diagram1, 2** and **3** on **page 230** and **231**). SKF Mudblock seals are engineered using Finite Element Analysis (FEA) to obtain optimum design solutions.

FEA evaluates to optimise the design:

- Stress / strain behavior of the sealing lip in deformed condition
- Lip contact forces
- Lip opening pressure
- Displacement of the lips
- Assembly simulation of seal and sleeve

To see how the new generation SKF Mudblock seals for oil-lubricated applications compare to conventional cassette seal designs, SKF conducted a punishing series of performance tests. The results speak for themselves: SKF Mudblock new generation seals lasted up to 50% longer and operated with up to 20% less friction than the competitor's seal. Yet SKF Mudblock seals also offered superior oil retention and contamination exclusion in the harshest, most contaminated conditions.

Fig. 2

Seal is installed in the housing bore

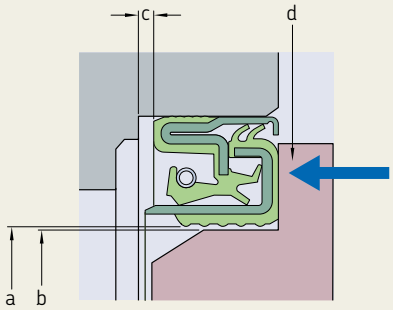

a) Seal inside diameter
b) Installation tool inside diameter
c) Bore depth clearance
d) Installation tool arrest

Fig. 3

Shaft is introduced

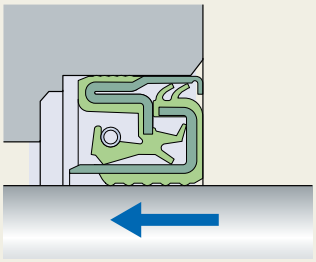

Recommended surface roughness values:
Shaft: h8; Ra = 1,6 to 3,2 µm
Housing bore: H8; Ra = 1,6 to 3,2 µm

SKF Mudblock seal designs MUD11 and MUD7

SKF Mudblock seal design MUD11 is a new generation of radial shaft sealing units, specifically developed for heavy-duty applications in harsh environments and tough operating conditions.

SKF MUD11 seals (→ **fig. 4**) are designed for oil lubricated applications and provide features including:

- **Half-metal / half-rubber outside diameter:** Improves static sealing, heat dissipation and retention in housing.
- **Bumper:** The bumper positions the sleeve relative to the seal to balance the right interference for the axial lips. It also acts as a line of defence against contaminants.
- **SKF developed nitrile rubber:** Represented by all of the light-green areas in the illustration, this standard SKF Mudblock sealing lip material is a unique nitrile rubber compound. Specially formulated by SKF to help reduce wear and ageing, this advanced material is compatible with most synthetic oils.
- **Curl:** Curled feature closes the unitized design, promotes easier installation and dismounting and also prevents seal disassembly during transport and handling.
- **Main lip:** The spring-loaded main sealing lip keep the sealing lips lubricated and promote sealing ability regardless of rotation direction. This results in less friction and wear for extended service life.
- **Integrated counterface:** Wear sleeve and seal form a single, unitized seal unit that eliminates shaft machining requirements.
- **Multiple sealing lips:** Pre-greased auxiliary radial and axial lips support the main lip for maximum protection against liquid or solid contaminant ingress.
- **Full rubber inside diameter:** Contributes to effective static sealing and helps reduce the assembly force required for installation.

Fig. 4

MUD11

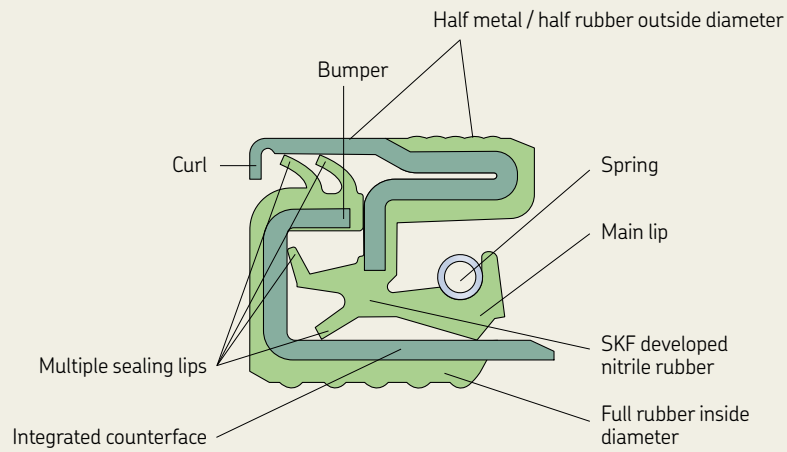

Diagram 1

MUD11 – Mud slurry test results to seal failure
Mud slurry tests simulate many thousands of hours of exposure to the most punishing liquid and solid contaminants. As this graph indicates, SKF Mudblock seals can outlast the competitor's seals by up to 1 700 hours.

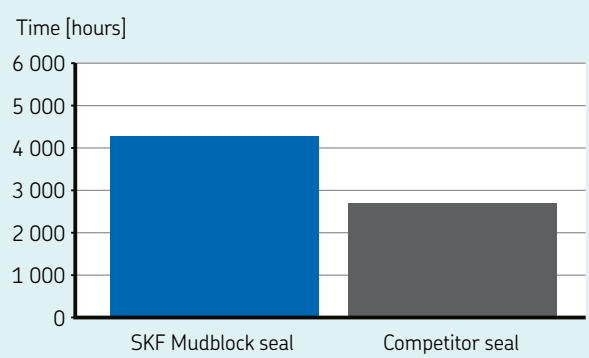

SKF Mudblock seals MUD7 (→ **fig. 5**) are designed for use in grease lubricated applications and provide features including:

- **Half metal / half rubber outside diameter:** for reliable seal retention in the bore as well as improved sealing performance
- **Rubber covered inside diameter:** for improved sealing performance and easy installation
- **Integrated wear sleeve**
- **SKF patented lip design:** for extended bearing service life
- **Bumper:** maintaining the relative position between the seal and the sleeve as well as acting as a barrier against contaminants
- **Auxiliary radial lips:** for contaminant exclusion

The SKF patented lip design has a special geometry combining both a spring-loaded radial lip and an axial lip. This design enables excess pressure inside the bearing chamber to pass the lip. Thus, the bearing can run cooler, resulting in extended service life.

Fig. 5

MUD7

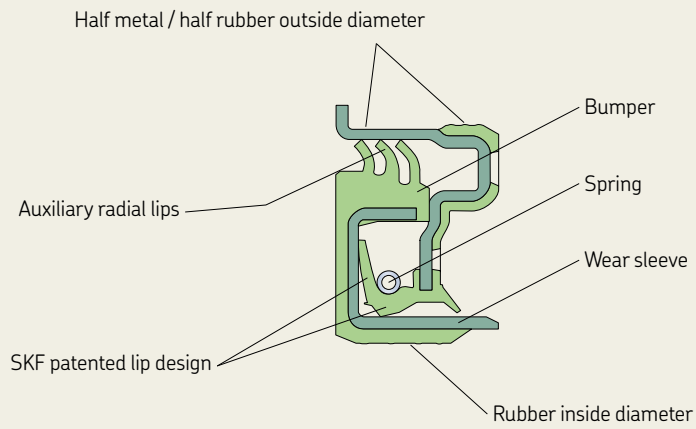

Diagram 2

MUD11 – Hot oil durability test results to seal failure
Deteriorating oil condition indicates the effectiveness of a seal's main oil retention lip. Featuring the seal profile, SKF Mudblock seals help extend oil durability, thereby reducing wear and contributing to significantly longer service life vs. the competitor's seals.

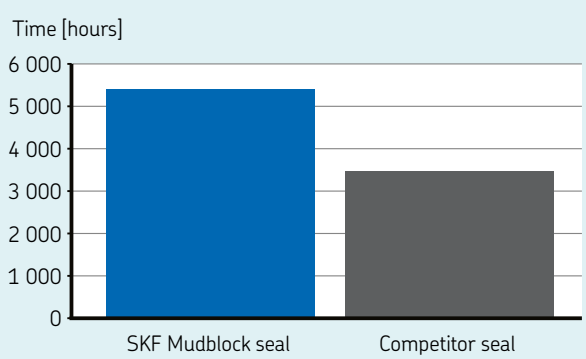

Diagram 3

MUD11 – Friction torque tests
Seal friction depends on several factors, including design geometry, rubber material composition and speed. Thanks to their optimized geometry and high-performance nitrile rubber material, SKF Mudblock seals operate with up to 20% less friction than the competitor's seals.

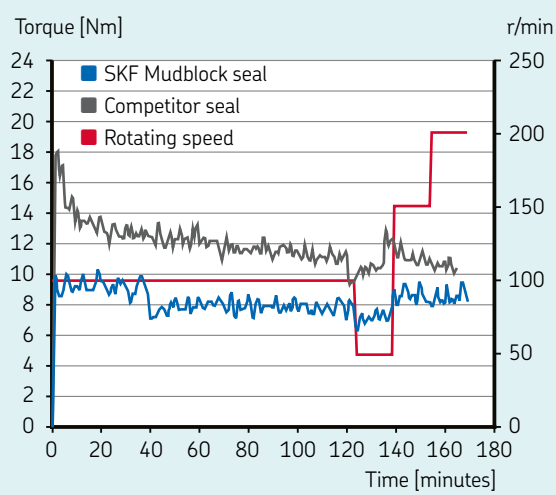

B Wear sleeves

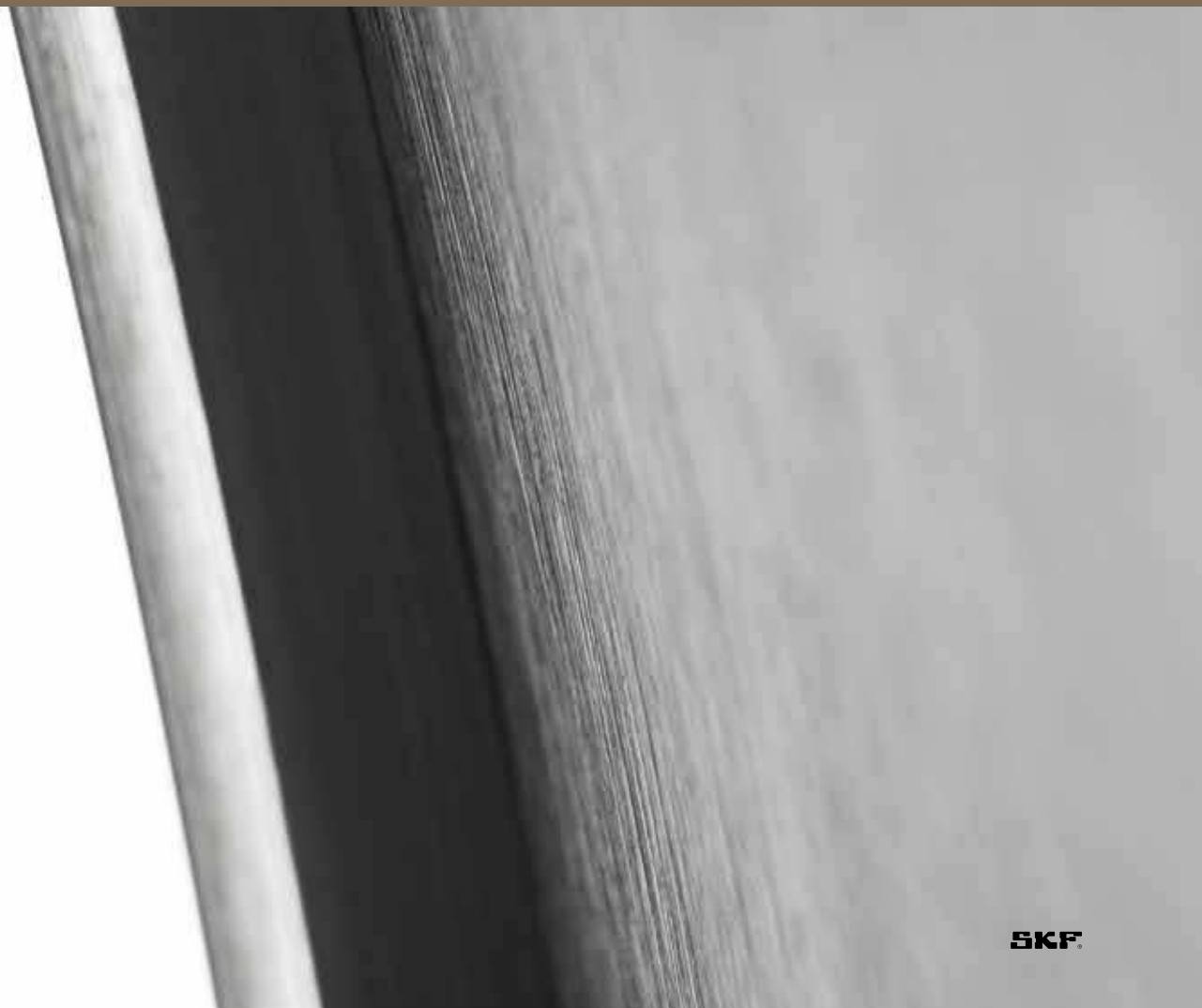

Wear sleeves – general

To seal efficiently, radial shaft seals must run against a smooth, round counterface. If the counterface becomes worn, the seals will no longer be able to fulfil their function, which is to retain lubricant and exclude contaminants.

Typically, the counterface becomes scored when a contaminant particle is caught under the sealing lip and abrades a track as the shaft rotates. As this continues, the seal will enable more particles to pass or get stuck, and seal efficiency deteriorates, eventually leading to malfunction of the component that the seal is meant to protect. To rectify the situation, it is necessary to repair the shaft surface since a seal replacement will not be sufficient. To repair the shaft, it is usually necessary to disassemble the machine in order to either replace the shaft or grind down the counterface until it is again within specification.

To overcome the problem of preparing the seal counterface to specification, without costly shaft treatments (machining, hardening and plunge grinding) and disassembly in case of worn shaft repair jobs, SKF has developed two kinds of sleeve: the SKF Speedi-Sleeve and LDSLV wear sleeves for heavy industrial applications.

The SKF Speedi-Sleeve is available for shaft diameters up to 203,33 mm (*8 in*) and when combined with an SKF radial shaft seal, will deliver a more consistent and durable sealing system.

For shaft diameters ranging from 211,15 to 1 143 mm (*8.313 to 45 in*), SKF's LDSLV4 design is recommended. They are made of SAE 1008 chromium-plated carbon steel to enhance wear and corrosion resistance (see **page 262** for more information).

Fig. 1

SKF Speedi-Sleeve

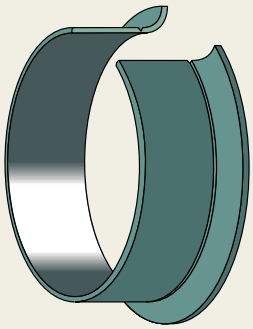

Fig. 2

LDSLV4 wear sleeve

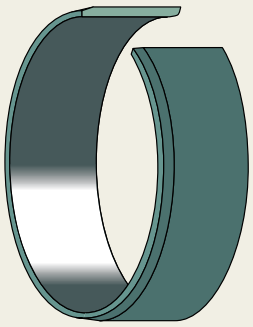

B.1 SKF Speedi-Sleeve

30%
LESS WEAR TO THE PREVIOUS GENERATION

SKF Speedi-Sleeve

- Minimal downtime
- Optimized surface

SKF Speedi-Sleeve – general

This thin-walled sleeve (0,28 mm [*0.011 in*]), developed by SKF, is simply pushed in position over the shaft, providing a counterface surface that is optimized for radial shaft seals.

There is no shaft disassembly or machining involved and costly downtime is minimized. Since the same sized seal as the original can be used, there is no need to search for other seals, or keep a stock of different sizes.

No special equipment is required since the installation tool is supplied with the sleeve. A mallet and a pair of pliers are all that is needed for the installation.

Features

The new generation SKF Speedi-Sleeve uses a proprietary stainless steel material and manufacturing process, resulting in an optimized seal counterface surface that minimizes wear on both sleeve and sealing lip. The proprietary material provides increased strength and excellent ductility properties of the sleeve. Imperceptible lubricant pockets enable the lubricant to reside on the sleeve and thereby prevent dry running of the sealing lip that otherwise can create excessive wear. The contact surface is wear resistant and machined to minimize directionality (0° ±0,05) with a finish of R_a 0,25 to 0,5 µm (*10 to 20 µin*). This is, in fact, a better counterface surface than can often be achieved on a shaft.

SKF Speedi-Sleeve has a removable flange to simplify installation (→ **fig. 1**). The flange can most often be left intact, but in applications where the flange will interfere with other system components, it should be removed to not cause friction heat and wear debris. The flange should also be removed in applications where it may reduce the supply of lubricant to the seal. This would reduce the cooling effect of the lubricant, resulting in elevated underlip temperatures and premature ageing of the sealing material.

If the flange is to be removed, it should be cut from the outside diameter into the radius in one location prior to installation. The flange can then be twisted and raised up after installation and grasped with a pair of long-nosed pliers and twisted into a coil.

Size range

The standard size range covers sleeves for shaft diameters from 11,99 to 203,33 mm (*0.472 to 8 in*). Depending on production quantities, non-standard sizes can be manufactured. Each sleeve is designed to fit a specific shaft diameter range, usually above and below the nominal shaft diameter. This permits some flexibility to accommodate variations in the actual shaft diameter.

SKF Speedi-Sleeve Gold

The new generation of SKF Speedi-Sleeve is also available in the Gold version, designed for highly abrasive applications. A thin, metallic coating applied to the base stainless steel imparts a gold colour and significantly increases durability. The original seal size can still be used. SKF Speedi-Sleeve Gold is particularly effective in environments with abrasive contaminants, especially when combined with a seal manufactured from the SKF fluoro rubber material, SKF Duralife.

Fig. 1

SKF Speedi-Sleeve removable flange

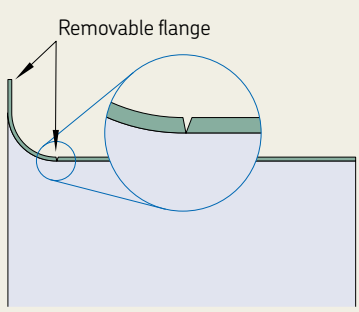

SKF Speedi-Sleeve – the fast and easy solution for worn shafts

Test results

The previous and new generation of SKF Speedi-Sleeve products were tested for abrasion resistance under both coarse and fine dust conditions. A 500 hour contamination test (→ **diagram 1**) showed that when compared to the previous generation sleeve, the new generation SKF Speedi-Sleeve reduced abrasion by a factor of 1,5 and was still operating efficiently.

To test sealing system effectiveness, a 2 000 hour life test was performed (→ **diagram 2**) using SKF Speedi-Sleeve new and previous generation products and SKF Wave seals made of the SKF fluoro rubber material SKF Duralife. The test results showed that SKF Speedi-Sleeve new generation reduced the sealing lip wear and the variation in the wear rate by approximately 30% compared to the previous generation sleeve and outperformed a chromium-plated surface by a factor of 2. This reduction improves the sealing system reliability as well as the predictability of the system service life.

Both tests were carried out under the same operating conditions:

- Temperatures up to 110 °C (*225 °F*)
- Linear shaft speeds of up to 8,6 m/s (*1 700 ft/min*)

In other tests, it was found that continuous salt spray at 35 °C (*95 °F*) produced no trace of corrosion even after 600 hours. This optimized performance is made possible through the use of the new generation of SKF Speedi-Sleeve.

Diagram 1

SKF Speedi-Sleeve wear test
Abrasive media, test stopped at 500 hours

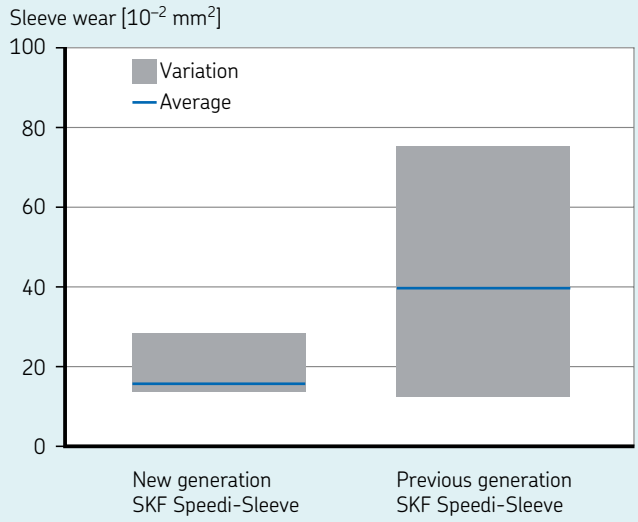

Diagram 2

Sealing lip wear test
Seals made from fluoro rubber, test stopped at 2 000 hours

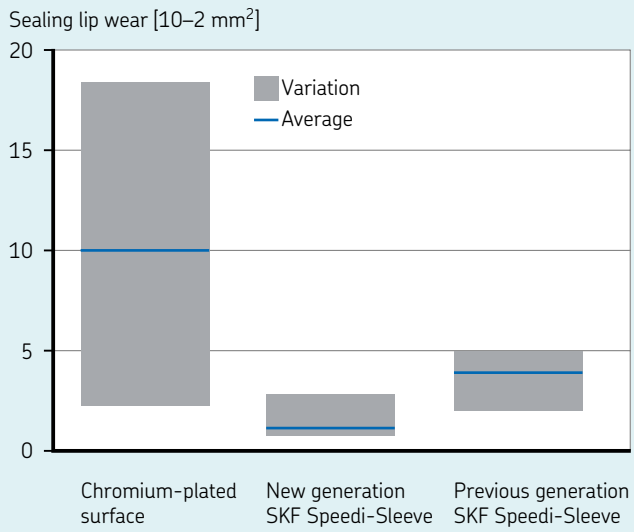

Selecting the right size

To determine the appropriate sleeve size, it is first necessary to clean the shaft carefully. The diameter of an undamaged section of the seal counterface should then be measured on at least three different planes. The arithmetical mean of these measurements determines the size of SKF Speedi-Sleeve. If the value lies within the permissible range listed in the product table for the shaft diameter d_1, SKF Speedi-Sleeve will have an adequate tight fit on the shaft and will not require an adhesive.

If no suitable size is listed in the product table, it will be necessary to rework the shaft to an appropriate dimension. This also means that a new seal size will be required. If production quantities are sufficient enough, SKF can provide specially dimensioned SKF Speedi-Sleeve or other wear sleeve solution.

Installing SKF Speedi-Sleeve

All SKF Speedi-Sleeve designs are installed the same way. Although installation is simple, it should be done carefully to achieve the best results. As the thin-walled sleeve has an interference fit, any disturbances on the shaft surface may create a similar pattern on the sleeve surface and cause the seal to leak. Therefore, the seal counterface surface of the shaft should be carefully cleaned and any burrs or rough spots filed down prior to installation. Deep wear grooves, scratches or very rough surfaces should be treated with a suitable powdered metal epoxy-type filler. The sleeve must be positioned on the shaft before the filler has hardened.

SKF Speedi-Sleeve must not be installed over keyways, cross holes, splines or threads since this will result in deformation of the sleeve, making it difficult for the seal to follow its new counterface surface as it rotates.

SKF Speedi-Sleeve should never be heated prior to installation. Using heat will cause the sleeve to expand, but when it cools, it may not contract back to its original size, resulting in a loose fit on the shaft.

See **fig. 2** for different SKF Speedi-Sleeve installations.

Fig. 2

SKF Speedi-Sleeve installations

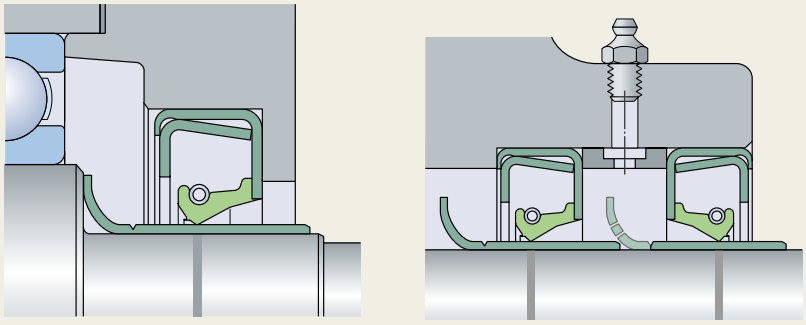

Installation procedure

1 Clean the seal counterface surface on the shaft. File down any burrs or rough spots and make sure that the sleeve will not be installed over keyways, cross holes, splines or similar.
2 Measure the diameter on an unworn portion of the shaft where the sleeve will be positioned (→ **fig. 3**). Measure in three positions and average the readings to make sure the shaft is within recommended specifications. If the average diameter is within the range for a given sleeve size, there is sufficient press fit built into the sleeve to prevent it from sliding or spinning without using an adhesive.
3 Determine where the sleeve must be positioned to cover the worn area. Measure to the exact point, or mark directly on the surface. The sleeve must be placed over the worn area, not just bottomed or left flush with the end of the shaft.
4 Shallow wear grooves do not require filling. Optionally, a light layer of a non-hardening sealant can be applied to the inside diameter surface of the sleeve. Clean away sealant that migrates to the shaft or sleeve outside diameter surface.
5 If the shaft is deeply scored, fill the groove with a powdered metal epoxy-type filler. Install the sleeve before the filler hardens, enabling the sleeve to wipe off any excess filler. Clean away any remaining filler from the sleeve outside diameter surface.
6 It should be repeated that heat should never be used to install SKF Speedi-Sleeve.
7 If the flange should be removed after installation, cut it from the outside diameter into the radius in one location. The flange end of the sleeve goes on the shaft first. Then, place the installation tool over the sleeve (→ **fig. 4**).
8 Gently tap the centre of the installation tool until the sleeve covers the worn shaft surface (→ **fig. 5**). If the installation tool is too short, a length of pipe or tubing with a squared-off, burr-free end can be used. Be sure that the inside diameter of the pipe is the same as that of the installation tool. Use care not to scratch the precision ground sleeve's outside diameter.
9 SKF Speedi-Sleeve should always be installed so that the outside edge of the sleeve is seated on the full shaft diameter. It must not rest in or outside the chamfer area since the sharp edge will likely cut the sealing lip during seal installation.
10 If the flange was cut for removal, use a pair of long-nosed pliers to grasp the flange away from the sleeve and twist it into a coil, being careful not to lift the end of the sleeve off the shaft or it will leave a jagged edge. Flange removal must be done with care to avoid damage to the outside diameter of the sleeve.
11 After the sleeve is installed, check again for burrs that could damage the seal.
12 Lubricate the sleeve with the system medium before installing the seal.
13 Proceed with seal installation.

Removing SKF Speedi-Sleeve

SKF Speedi-Sleeve can be removed by applying heat to the sleeve with an electric heat blower, which will expand it enough to let it slide off the shaft without causing any damage to the shaft.

Alternatively, the sleeve can be removed in any of the following ways, always using care not to damage the shaft surface:

- By Relieving The Press-Fit Tension Using A Small Hammer To Peen Across The Full Width Of The Sleeve
- By Using A Cold Chisel To Cut Through The Sleeve
- By Using A Pair Of Wire Cutters Starting At Or Near the flange and applying a twisting motion

Please note that SKF Speedi-Sleeve cannot be reused.

Fig. 3

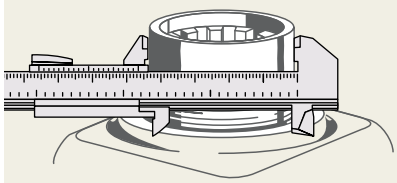

Fig. 4

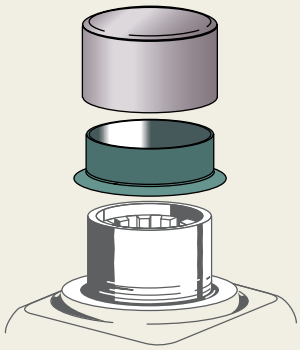

Fig. 5

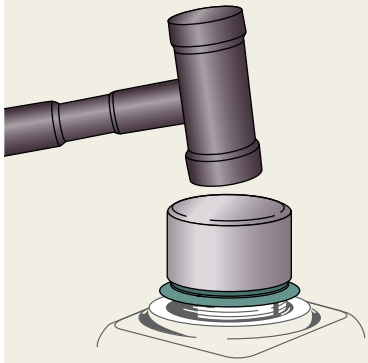

d_1 **11,99–38,18** mm

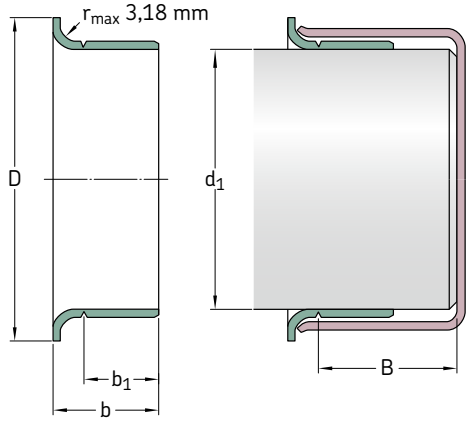

All sleeves listed in the product table can be manufactured as both standard and Gold version.

Shaft diameter range		Nominal dimensions					Designation
d_1 min.	max.	d_1	D ±1,6	b_1 ±0,8	b ±0,8	B[1]	
mm		mm					–
11,99	**12,07**	11,99	15,49	5,99	8,41	47,63	**99049**
12,65	**12,75**	12,70	15,49	6,35	8,74	50,80	**99050**
13,89	**14,00**	14,00	19,05	6,35	9,93	46,51	**99055**
14,22	**14,38**	14,30	19,05	6,35	9,93	46,51	**99056**
14,96	**15,06**	15,01	19,05	5,00	8,99	47,29	**99059**
15,82	**15,93**	15,88 15,88	19,05 19,05	7,95 7,95	10,31 10,31	50,80 50,80	**99810**[2] **99062**
15,90	**16,00**	16,00	18,24	7,95	11,13	50,80	**99058**
16,94	**17,04**	16,99	22,23	8,00	11,00	50,80	**99068**
17,32	**17,42**	17,37	22,86	7,95	11,13	50,80	**99060**
17,88	**18,01**	18,01	24,43	8,00	11,00	46,00	**99082**
19,00	**19,10**	19,05 19,05	24,00 24,00	7,95 7,95	11,13 11,13	50,80 50,80	**99811**[2] **99076**
19,28	**19,33**	19,30	23,83	7,95	11,13	50,80	**99081**
19,81	**19,91**	19,84	23,75	7,95	11,13	50,80	**99080**
19,94	**20,04**	19,99	23,62	8,00	11,00	50,80	**99078**
20,62	**20,70**	20,65	30,18	9,53	14,30	76,20	**99083**
21,77	**21,87**	21,82	29,34	6,35	9,53	50,80	**99086**
21,87	**22,00**	22,00 22,00	30,18 30,18	6,58 8,00	9,12 11,99	47,14 46,02	**99084** **99085**
22,17	**22,28**	22,23 22,23	27,79 27,79	7,95 7,95	11,13 11,13	50,80 50,80	**99812**[2] **99087**
23,06	**23,16**	23,11 23,11	30,94 30,94	7,95 7,95	11,13 11,13	46,91 46,91	**99860**[2] **99091**
23,88	**24,00**	24,00	28,70	7,95	11,13	50,80	**99092**

[1] Possible max. distance of the rear groove from the shaft end when the installation tool supplied with the sleeve is used
[2] SKF Speedi-Sleeve Gold

Shaft diameter range		Nominal dimensions					Designation
d_1 min.	max.	d_1	D ±1,6	b_1 ±0,8	b ±0,8	B[1]	
mm		mm					–
24,54	**24,64**	24,61	28,70	7,95	11,13	50,80	**99094**
		24,61	28,70	15,88	18,26	50,80	**99096**
24,94	**25,04**	24,99	33,02	7,95	11,00	50,80	**99813**[2]
		24,99	33,02	7,95	11,00	50,80	**99098**
25,35	**25,45**	25,40	30,96	7,95	11,13	50,80	**99814**[2]
		25,40	30,96	7,95	11,13	50,80	**99868**
25,88	**26,01**	26,01	33,35	8,00	11,99	46,05	**99103**
26,92	**27,03**	27,00	33,53	7,95	11,13	46,81	**99815**[2]
		27,00	33,53	7,95	11,13	46,81	**99106**
27,61	**27,71**	27,66	35,71	7,95	11,13	15,88	**99108**
27,94	**28,04**	27,99	34,93	9,53	12,70	46,81	**99866**[3]
		27,99	34,93	9,53	12,70	46,81	**99111**
28,52	**28,63**	28,58	38,10	7,95	11,13	17,48	**99816**[2]
		28,58	38,10	7,95	11,13	17,48	**99112**
		28,58	38,10	9,53	12,70	17,48	**99116**
29,31	**29,41**	29,36	34,29	9,53	12,70	17,48	**99865**[3]
		29,36	34,29	9,53	12,70	17,48	**99120**
29,79	**29,92**	29,85	35,56	7,95	11,13	17,48	**99122**
29,95	**30,07**	30,00	35,56	8,00	11,00	17,48	**99114**
30,10	**30,23**	30,18	35,56	7,95	11,13	17,48	**99118**
30,89	**31,04**	30,96	39,70	7,95	11,00	15,88	**99123**
31,42	**31,57**	31,50	39,12	8,00	11,13	17,48	**99141**
31,67	**31,83**	31,75	38,10	7,95	11,13	17,48	**99817**[2]
		31,75	38,10	7,95	11,13	17,48	**99125**
31,93	**32,08**	32,00	38,10	8,00	11,13	17,48	**99128**
32,94	**33,05**	32,99	40,49	15,01	18,01	25,40	**99121**
33,22	**33,38**	33,35	40,64	6,35	9,53	20,65	**99129**
33,27	**33,43**	33,35	40,49	12,70	15,88	20,65	**99818**[2]
		33,35	40,49	12,70	15,88	20,65	**99131**
33,86	**34,01**	34,01	41,28	12,70	15,88	20,65	**99134**
34,82	**34,98**	34,93	41,61	7,95	11,13	20,65	**99133**
		34,93	41,61	12,70	15,88	20,65	**99819**[2]
		34,93	41,61	12,70	15,88	20,65	**99138**
34,93	**35,08**	34,93	41,61	13,00	16,00	20,65	**99820**[2]
		34,93	41,61	13,00	16,00	20,65	**99139**
35,84	**35,99**	35,99	45,24	13,00	16,99	24,99	**99146**
36,37	**36,53**	36,53	45,24	14,30	17,48	25,81	**99821**[2]
		36,53	45,24	14,30	17,48	25,81	**99143**
36,45	**36,60**	36,53	45,24	9,53	12,70	25,81	**99144**
37,85	**38,00**	38,00	45,24	13,00	16,99	24,99	**99147**
38,02	**38,18**	38,10	45,24	9,53	12,70	25,81	**99823**[2]
		38,10	45,24	9,53	12,70	25,81	**99150**
		38,10	45,24	14,30	17,48	25,81	**99822**[2]
		38,10	45,24	14,30	17,48	25,81	**99149**

[1] Possible max. distance of the rear groove from the shaft end when the installation tool supplied with the sleeve is used
[2] SKF Speedi-Sleeve Gold

d_1 **38,61–59,26** mm

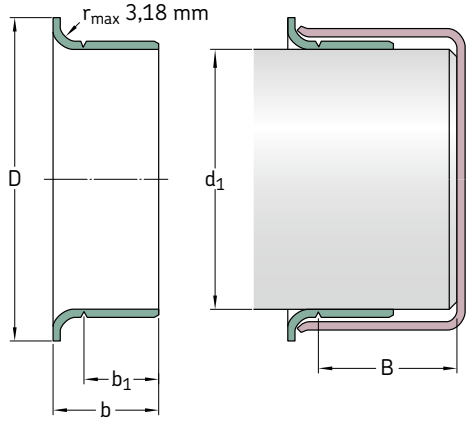

All sleeves listed in the product table can be manufactured as both standard and Gold version.

Shaft diameter range		Nominal dimensions					Designation
d_1 min.	max.	d_1	D ±1,6	b_1 ±0,8	b ±0,8	B[1]	
mm		mm					–
38,61	**38,76**	38,68	47,22	11,13	14,30	25,81	**99152**
39,34	**39,50**	39,42	47,22	11,13	14,30	25,81	**99155**
39,60	**39,75**	39,67	47,22	14,30	17,48	25,81	**99824**[2]
		39,67	47,22	14,30	17,48	25,81	**99156**
39,78	**39,93**	39,85	47,22	15,88	19,05	25,81	**99159**
39,85	**40,01**	40,01	46,99	9,91	12,93	25,40	**99153**
39,93	**40,08**	40,08	46,99	13,00	16,00	25,98	**99825**[2]
		40,08	46,99	13,00	16,00	25,98	**99157**
40,69	**40,84**	40,77	49,23	12,70	16,28	25,40	**99160**
40,84	**41,00**	41,00	49,23	12,70	15,88	25,81	**99163**
41,20	**41,35**	41,28	47,63	7,95	11,13	25,81	**99161**
		41,28	47,63	14,30	17,48	20,65	**99826**[2]
		41,28	47,63	14,30	17,48	20,65	**99162**
41,83	**42,01**	41,91	53,01	11,30	14,50	21,49	**99166**
		41,91	53,01	14,30	17,50	21,01	**99169**
		42,01	53,01	14,30	17,50	21,01	**99873**[2]
41,99	**42,14**	42,06	53,01	13,97	17,50	21,01	**99165**
42,77	**42,93**	42,88	48,41	14,30	17,48	22,23	**99168**
42,80	**42,95**	42,88	48,41	7,95	11,13	22,23	**99167**
42,85	**43,00**	43,00	48,41	12,70	15,88	21,44	**99182**
43,56	**43,71**	43,66	51,59	14,30	17,48	20,65	**99171**
44,09	**44,25**	44,17	52,40	9,53	12,70	20,65	**99170**
44,37	**44,53**	44,45	52,20	9,53	12,70	20,65	**99172**
		44,45	52,40	13,49	15,88	22,30	**99180**
		44,45	52,40	14,30	17,48	20,65	**99827**[2]
		44,45	52,40	14,30	17,48	20,65	**99174**
		44,45	52,40	19,05	22,23	20,65	**99828**[2]
		44,45	52,40	19,05	22,23	20,65	**99175**

[1] Possible max. distance of the rear groove from the shaft end when the installation tool supplied with the sleeve is used
[2] SKF Speedi-Sleeve Gold

Shaft diameter range		Nominal dimensions					Designation
d_1 min.	max.	d_1	D ±1,6	b_1 ±0,8	b ±0,8	B[1]	
mm		mm					–
44,73	**44,88**	44,86	52,40	14,30	17,48	20,65	**99829**[2]
		44,86	52,40	14,30	17,48	20,65	**99176**
44,93	**45,09**	45,01	53,01	14,00	16,99	20,62	**99830**[2]
		45,01	53,01	14,00	16,99	20,62	**99177**
45,16	**45,31**	45,24	53,98	16,94	20,32	26,97	**99179**
45,95	**46,10**	46,05	53,09	14,30	17,48	25,40	**99831**[2]
		46,05	53,09	14,30	17,48	25,40	**99181**
47,17	**47,32**	47,22	54,76	14,30	17,48	25,40	**99185**
47,40	**47,55**	47,45	55,58	22,58	26,04	25,40	**99186**
47,55	**47,70**	47,63	55,96	4,45	7,49	18,90	**99190**
		47,63	55,96	7,49	10,54	18,90	**99188**
		47,63	55,96	9,53	13,11	26,67	**99184**
		47,63	55,96	14,30	17,48	25,40	**99832**[2]
		47,63	55,96	14,30	17,48	25,40	**99187**
47,93	**48,08**	48,03	56,01	14,00	16,97	24,99	**99189**
48,49	**48,64**	48,56	56,36	9,53	12,70	25,40	**99192**
49,12	**49,28**	49,23	56,36	14,30	17,48	25,40	**99833**[2]
		49,23	56,36	14,30	17,48	25,40	**99193**
49,91	**50,06**	50,01	56,49	14,00	16,97	34,29	**99052**
		50,01	57,00	14,00	16,97	24,99	**99196**
50,22	**50,37**	50,29	58,75	14,30	17,88	26,67	**99198**
50,72	**50,88**	50,80	61,11	14,30	17,48	25,55	**99834**[2]
		50,80	61,11	14,30	17,48	25,40	**99199**
		50,80	61,11	22,23	25,40	25,40	**99835**[2]
		50,80	61,11	22,23	25,40	25,40	**99200**
51,82	**51,99**	51,99	62,71	12,70	15,88	34,52	**99878**
52,25	**52,40**	52,40	62,71	19,84	23,83	34,93	**99205**
53,92	**54,05**	53,98	61,52	12,70	19,05	32,54	**99210**
53,95	**54,10**	53,98	61,52	19,84	23,83	34,93	**99836**[2]
		53,98	61,52	19,84	23,83	34,93	**99212**
54,91	**55,07**	54,99	62,00	19,99	22,99	31,75	**99863**[2]
		54,99	62,00	19,99	22,99	31,75	**99215**
55,52	**55,68**	55,58	63,50	19,84	23,83	33,35	**99218**
55,83	**56,01**	56,01	64,29	12,70	15,88	33,35	**99220**
		56,01	64,29	19,79	23,77	80,01	**99224**
56,57	**56,72**	56,64	64,29	12,70	15,88	33,35	**99861**[2]
		56,64	64,29	12,70	15,88	33,35	**99229**
		56,64	64,29	19,84	23,01	31,75	**99230**
56,82	**56,97**	56,90	65,10	19,41	22,86	31,75	**99226**
57,12	**57,28**	57,15	64,29	7,95	11,13	33,35	**99838**[2]
		57,15	64,29	7,95	11,13	33,35	**99227**
		57,15	64,29	19,84	23,83	33,35	**99837**[2]
		57,15	64,29	19,84	23,83	33,35	**99225**
57,91	**58,06**	57,99	65,99	19,99	23,83	34,93	**99219**
58,65	**58,80**	58,75	68,28	19,84	23,83	34,93	**99231**
59,11	**59,26**	59,13	69,85	19,05	22,23	38,10	**99233**

[1] Possible max. distance of the rear groove from the shaft end when the installation tool supplied with the sleeve is used
[2] SKF Speedi-Sleeve Gold

d_1 **59,92–82,63** mm

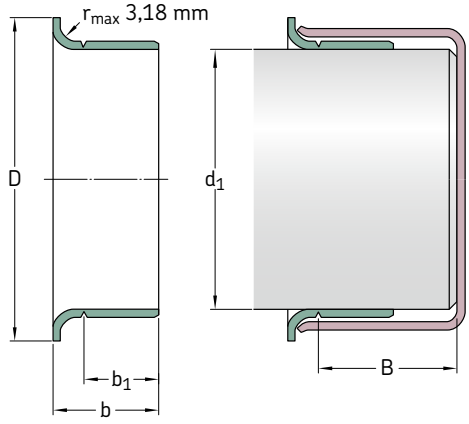

All sleeves listed in the product table can be manufactured as both standard and Gold version.

Shaft diameter range		Nominal dimensions					Designation
d_1 min.	max.	d_1	D ±1,6	b_1 ±0,8	b ±0,8	B[1]	
mm		mm					–
59,92	**60,07**	59,99	70,74	9,40	11,43	37,36	**99241**
		59,99	70,74	19,99	22,99	34,93	**99869**[2]
		59,99	70,74	19,99	22,99	34,93	**99235**
60,25	**60,40**	60,33	69,85	15,09	19,05	34,93	**99238**
60,30	**60,45**	60,33	69,85	13,36	17,35	34,93	**99240**
		60,33	69,85	19,84	23,83	34,93	**99839**[2]
		60,33	69,85	19,84	23,83	34,93	**99237**
61,82	**62,00**	61,93	71,83	19,84	23,83	35,38	**99243**
		62,00	71,83	12,70	15,88	36,20	**99244**
61,85	**62,00**	61,93	71,83	12,70	15,88	36,20	**99242**
63,22	**63,37**	63,30	73,03	19,84	23,83	35,38	**99249**
63,42	**63,58**	63,50	71,63	14,10	16,51	22,61	**99253**
63,50	**63,65**	63,50	71,83	12,70	16,66	35,38	**99248**
		63,50	71,63	19,84	23,83	34,93	**99840**[2]
		63,50	71,63	19,84	23,83	34,93	**99250**
63,75	**63,91**	63,91	71,83	19,84	23,01	36,53	**99251**
64,92	**65,07**	65,00	72,39	19,99	22,99	34,93	**99841**[2]
		65,00	72,39	19,99	22,99	34,93	**99254**
65,02	**65,18**	65,10	73,43	19,84	23,83	34,93	**99256**
65,91	**66,07**	65,99	75,95	19,84	23,83	31,75	**99259**
66,50	**66,65**	66,57	77,39	19,84	23,83	34,93	**99261**
66,57	**66,73**	66,68	77,39	19,84	23,01	34,93	**99264**
66,60	**66,75**	66,68	77,39	12,70	15,88	34,93	**99260**
66,68	**66,83**	66,68	77,39	19,84	23,83	34,93	**99842**[2]
		66,68	77,39	19,84	23,83	34,93	**99262**
67,82	**68,00**	68,00	79,38	19,05	22,23	42,88	**99266**
69,27	**69,42**	69,34	79,38	19,84	23,01	33,35	**99268**

[1] Possible max. distance of the rear groove from the shaft end when the installation tool supplied with the sleeve is used
[2] SKF Speedi-Sleeve Gold

Shaft diameter range		Nominal dimensions					Designation
d_1 min.	max.	d_1	D ±1,6	b_1 ±0,8	b ±0,8	B[1]	
mm		mm					–
69,60	**69,75**	69,67	77,85	19,84	23,83	31,75	**99273**
69,72	**69,88**	69,85	79,38	19,84	23,83	31,75	**99843**[2]
		69,85	79,38	19,84	23,83	31,75	**99274**
69,77	**69,93**	69,85	78,11	36,53	41,28	41,28	**99267**
69,85	**70,00**	69,85	79,38	10,31	14,30	31,75	**99272**
		69,85	79,38	19,84	23,83	31,75	**99844**[2]
		69,85	79,38	19,84	23,83	31,75	**99275**
		69,85	79,38	28,58	31,75	33,32	**99269**
69,93	**70,08**	70,00	79,38	19,99	24,00	31,75	**99276**
71,35	**71,50**	71,45	80,98	15,09	17,48	31,75	**99281**
71,83	**72,01**	72,01	81,92	19,05	22,23	34,11	**99870**[2]
		72,01	81,92	19,05	22,23	34,11	**99284**
72,09	**72,24**	72,09	81,92	12,70	16,66	31,75	**99845**[2]
		72,09	81,92	12,70	16,66	31,75	**99282**
72,80	**72,95**	72,87	80,98	19,84	23,83	31,75	**99286**
72,97	**73,13**	73,03	81,76	19,84	23,83	31,75	**99846**[2]
		73,03	81,76	19,84	23,83	31,75	**99287**
74,60	**74,75**	74,63	84,94	12,70	16,28	33,81	**99290**
		74,63	84,94	19,84	23,83	33,35	**99847**[2]
		74,68	84,94	19,84	23,83	33,35	**99293**
74,93	**75,08**	75,01	83,13	15,09	17,53	27,51	**99289**
		75,01	83,95	22,00	26,01	33,35	**99875**[2]
		75,01	83,95	22,00	26,01	33,35	**99294**
75,49	**75,59**	75,54	82,17	20,65	25,40	31,75	**99292**
75,95	**76,10**	76,02	85,32	12,29	15,88	33,81	**99291**
		76,02	85,32	14,30	17,48	34,93	**99298**
		76,02	85,09	20,65	25,40	32,54	**99299**
76,12	**76,28**	76,20	82,30	20,65	23,83	34,93	**99296**
76,20	**76,35**	76,20	84,96	15,88	20,65	32,51	**99048**
		76,20	82,17	20,65	25,40	32,54	**99848**[2]
		76,20	82,17	20,65	25,40	32,54	**99300**
76,40	**76,56**	76,48	85,22	12,70	15,88	50,80	**99301**
77,83	**78,00**	78,00	88,09	19,05	22,23	52,22	**99306**
79,25	**79,40**	79,38	89,69	17,48	20,65	50,80	**99311**
		79,38	89,69	20,65	25,40	50,80	**99849**[2]
		79,38	89,69	20,65	25,40	50,80	**99312**
79,35	**79,55**	79,38	89,54	14,00	18,01	51,59	**99053**
79,81	**80,01**	80,01	89,92	19,05	22,50	34,93	**99313**
79,91	**80,09**	80,01	89,99	11,00	15,01	34,93	**99317**
		80,01	89,99	21,01	24,00	34,93	**99315**
81,92	**82,07**	81,99	91,06	16,76	21,54	44,45	**99328**
82,47	**82,63**	82,55	91,29	20,65	25,40	34,93	**99322**

[1] Possible max. distance of the rear groove from the shaft end when the installation tool supplied with the sleeve is used
[2] SKF Speedi-Sleeve Gold

d_1 **82,55–123,11** mm

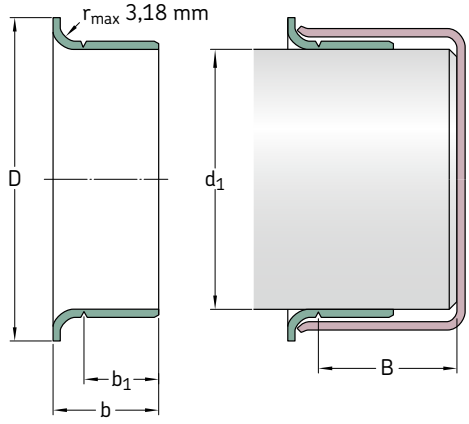

All sleeves listed in the product table can be manufactured as both standard and Gold version.

Shaft diameter range		Nominal dimensions					Designation
d_1 min.	max.	d_1	D ±1,6	b_1 ±0,8	b ±0,8	B[1]	
mm		mm					–
82,55	**82,70**	82,55	90,81	15,11	18,26	34,93	**99850**[2]
		82,55	90,81	15,11	18,26	34,93	**99324**
		82,55	91,06	17,48	22,23	31,75	**99326**
		82,55	91,06	20,65	25,40	34,93	**99851**[2]
		82,55	91,06	20,65	25,40	34,93	**99325**
84,00	**84,15**	84,07	93,68	20,65	25,40	34,93	**99331**
84,76	**85,01**	84,89	93,98	16,99	21,01	35,00	**99332**
		84,89	93,98	21,01	24,99	35,00	**99872**[2]
		84,89	93,98	21,01	24,99	35,00	**99333**
84,79	**85,01**	85,01	90,93	10,13	12,67	36,35	**99334**
85,67	**85,83**	85,73	93,68	9,53	12,70	35,81	**99338**
		85,73	93,85	20,65	25,40	34,93	**99337**
87,25	**87,40**	87,33	97,64	19,84	23,01	35,71	**99339**
87,80	**88,00**	88,00	95,28	29,21	34,27	42,50	**99481**
88,32	**88,47**	88,39	97,41	19,84	23,01	35,71	**99340**
88,82	**88,98**	88,90	97,64	15,88	20,65	34,21	**99346**
88,90	**89,05**	88,90	97,16	7,95	12,70	34,21	**99347**
		88,90	97,64	20,65	25,40	34,21	**99852**[2]
		88,90	97,64	20,65	25,40	34,21	**99350**
88,93	**89,08**	89,00	97,64	15,88	20,65	34,24	**99349**
89,92	**90,07**	89,99	101,60	11,13	13,67	46,05	**99352**
		89,99	101,60	13,36	16,94	44,45	**99353**
		89,99	101,60	18,03	23,01	46,05	**99351**
		89,99	101,60	23,01	27,99	44,45	**99354**
90,42	**90,58**	90,50	99,06	20,65	25,40	44,45	**99356**
91,90	**92,05**	91,97	102,39	20,65	25,40	44,45	**99360**
92,02	**92,18**	92,08	102,24	12,70	15,88	44,45	**99363**
		92,08	102,39	20,65	25,40	44,45	**99362**
93,57	**93,73**	93,68	102,39	7,95	11,13	22,23	**99368**

[1] Possible max. distance of the rear groove from the shaft end when the installation tool supplied with the sleeve is used
[2] SKF Speedi-Sleeve Gold

Shaft diameter range		Nominal dimensions					Designation
d_1 min.	max.	d_1	D ±1,6	b_1 ±0,8	b ±0,8	B[1]	
mm		mm					–
93,60	**93,75**	93,68	102,24	20,65	23,83	45,72	**99365**
94,67	**94,82**	94,74	102,01	11,91	15,09	45,72	**99359**
		94,74	102,24	19,84	23,01	45,72	**99366**
94,92	**95,07**	95,00	102,24	21,01	24,00	45,72	**99369**
95,00	**95,15**	95,07	102,39	8,74	12,70	45,72	**99374**
		95,07	102,49	11,91	15,09	45,72	**99364**
95,15	**95,30**	95,22	102,24	14,30	17,48	45,72	**99376**
95,25	**95,40**	95,25	102,11	17,48	22,23	45,72	**99853**[2]
		95,33	102,24	8,74	12,70	45,72	**99367**
		95,33	102,11	17,48	22,23	45,72	**99372**
98,25	**98,40**	98,32	106,30	20,65	25,40	47,63	**99386**
98,37	**98,53**	98,43	107,16	20,65	25,40	47,63	**99387**
99,95	**100,10**	100,03	109,55	20,65	25,40	52,07	**99854**[2]
		100,03	109,55	20,65	25,40	52,07	**99393**
101,55	**101,75**	101,60	111,13	12,70	15,88	52,48	**99401**
		101,60	111,13	15,24	18,42	52,07	**99395**
		101,60	111,13	16,51	19,69	34,93	**99400**
		101,60	111,13	20,65	25,40	52,07	**99855**[2]
		101,60	111,13	20,65	25,40	52,07	**99399**
103,89	**104,09**	103,99	112,73	19,99	24,00	35,99	**99409**
104,70	**104,90**	104,78	113,54	20,65	25,40	34,93	**99412**
104,90	**105,11**	105,00	113,54	19,99	23,19	35,00	**99413**
106,25	**106,45**	106,38	114,30	20,65	25,40	34,93	**99418**
107,34	**107,54**	107,54	117,09	19,84	23,01	36,53	**99423**
107,90	**108,10**	107,95	117,09	20,65	25,40	36,53	**99424**
109,78	**110,01**	110,01	124,99	11,38	14,96	32,94	**99434**
109,91	**110,11**	109,93	124,99	12,93	16,51	31,75	**99435**
111,00	**111,20**	111,13	120,65	20,65	25,40	41,91	**99437**
111,79	**111,99**	111,99	120,65	19,05	22,50	33,02	**99438**
112,62	**112,83**	112,73	122,25	25,40	29,01	33,35	**99439**
114,20	**114,40**	114,30	123,19	20,65	25,40	31,75	**99856**[2]
		114,30	124,46	20,65	25,40	31,75	**99450**
114,88	**115,09**	115,01	127,00	20,65	23,83	31,75	**99452**
117,37	**117,58**	117,48	127,00	11,13	15,88	34,93	**99465**
		117,48	128,60	25,40	31,75	34,93	**99463**
119,00	**119,20**	119,08	128,60	20,65	25,40	34,93	**99468**
119,89	**120,09**	119,99	129,79	8,00	11,00	33,60	**99471**
		119,99	129,79	19,99	24,99	32,00	**99473**
120,55	**120,75**	120,65	127,00	12,70	19,05	38,10	**99475**
121,89	**122,10**	122,00	131,50	19,99	24,00	32,00	**99472**
122,91	**123,11**	123,01	132,82	19,99	24,99	31,60	**99484**

[1] Possible max. distance of the rear groove from the shaft end when the installation tool supplied with the sleeve is used
[2] SKF Speedi-Sleeve Gold

d_1 **123,72–203,33** mm

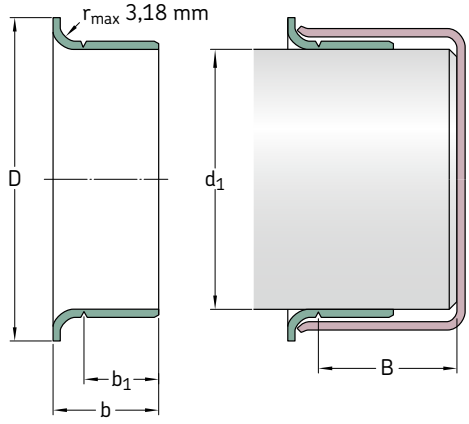

All sleeves listed in the product table can be manufactured as both standard and Gold version.

Shaft diameter range		Nominal dimensions					Designation
d_1 min.	max.	d_1	D ±1,6	b_1 ±0,8	b ±0,8	B[1]	
mm		mm					–
123,72	**123,93**	123,83	133,35	15,88	19,05	36,53	**99487**
124,89	**125,10**	124,99	137,16	10,01	14,00	36,53	**99490**
		124,99	137,16	26,01	32,00	36,53	**99492**
126,95	**127,15**	127,00	137,16	13,72	17,30	36,53	**99501**
		127,00	137,16	17,48	22,23	36,53	**99857**[2]
		127,00	137,16	17,48	22,23	36,53	**99498**
		127,00	136,91	20,65	25,40	36,53	**99858**[2]
		127,00	136,91	20,65	25,40	36,53	**99499**
127,80	**128,00**	128,00	135,26	29,21	34,27	40,30	**99482**
129,79	**130,00**	129,90	139,52	19,05	23,83	30,00	**99494**
129,97	**130,18**	130,00	139,52	22,00	25,30	32,51	**99874**[2]
		130,18	139,52	22,00	25,30	32,51	**99491**
130,05	**130,25**	130,18	139,70	20,65	25,40	31,75	**99513**
133,25	**133,45**	133,35	141,22	20,65	25,40	31,75	**99525**
134,80	**135,00**	134,90	145,67	20,50	25,40	31,75	**99533**
136,42	**136,63**	136,53	149,23	20,65	25,40	31,75	**99537**
138,02	**138,23**	138,13	146,05	38,10	42,88	47,63	**99548**
138,99	**139,19**	139,09	149,86	14,30	19,05	31,34	**99547**
139,65	**139,85**	139,70	150,83	13,16	17,91	31,75	**99550**
		139,70	150,83	20,65	25,40	31,75	**99859**[2]
		139,70	150,83	20,65	25,40	31,75	**99549**
139,90	**140,11**	140,00	151,00	20,50	25,40	31,75	**99552**
142,77	**142,98**	142,88	157,18	22,23	25,40	46,02	**99560**
144,75	**145,01**	145,01	154,94	19,05	22,23	46,02	**99571**
145,44	**145,64**	145,64	154,94	14,30	19,05	49,23	**99562**
145,95	**146,15**	146,05	156,97	20,65	25,40	44,45	**99575**

[1] Possible max. distance of the rear groove from the shaft end when the installation tool supplied with the sleeve is used
[2] SKF Speedi-Sleeve Gold

Shaft diameter range		Nominal dimensions					Designation
d_1 min.	max.	d_1	D ±1,6	b_1 ±0,8	b ±0,8	B[1]	
mm		mm					–
149,12	**149,33**	149,23 149,23	157,18 157,18	25,40 25,40	31,75 31,75	33,35 33,35	**99862**[2] **99587**
149,76	**150,01**	149,99	159,00	26,01	30,00	32,51	**99595**
150,72	**150,93**	150,83	161,93	25,40	28,58	47,63	**99596**
152,27	**152,48**	152,40 152,40	161,54 161,93	12,70 25,40	19,05 31,75	44,45 44,45	**99601** **99599**
153,87	**154,13**	154,00	161,93	26,01	30,00	32,99	**99605**
154,74	**154,99**	154,86	167,01	26,01	30,00	32,99	**99606**
157,43	**157,68**	157,56	168,28	20,65	27,00	44,45	**99620**
158,62	**158,88**	158,75	168,28	26,19	31,75	44,45	**99625**
159,74	**159,99**	159,99	171,45	25,40	31,75	34,93	**99630**
164,97	**165,23**	165,10	177,80	25,40	31,75	34,93	**99650**
169,75	**170,00**	169,88	182,58	31,75	38,00	44,45	**99640**
171,32	**171,58**	171,45	180,98	20,65	27,00	44,45	**99675**
174,75	**175,01**	175,01	186,99	27,99	32,00	35,00	**99687**
177,67	**177,93**	177,80 177,80	189,87 189,87	25,40 25,40	31,75 31,75	42,88 42,88	**99864**[2] **99700**
179,76	**180,01**	180,01	190,50	32,99	38,00	44,50	**99721**
184,00	**184,25**	184,15	197,10	31,75	38,10	55,25	**99725**
184,73	**184,99**	184,86	197,10	32,00	38,00	54,99	**99726**
189,08	**189,33**	189,31	199,64	20,65	25,40	31,75	**99745**
190,37	**190,63**	190,50	200,03	20,65	25,40	31,75	**99750**
196,72	**196,98**	196,85	210,06	25,40	33,35	47,63	**99775**
199,87	**200,13**	200,03	212,73	34,52	38,10	44,45	**99787**
201,50	**201,75**	201,63	212,73	25,40	31,75	44,45	**99799**
203,07	**203,33**	203,20	212,73	25,40	31,75	44,45	**99800**

[1] Possible max. distance of the rear groove from the shaft end when the installation tool supplied with the sleeve is used
[2] SKF Speedi-Sleeve Gold

d_1 0.472–1.496

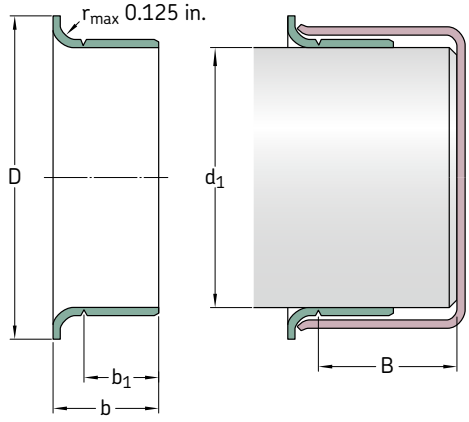

All sleeves listed in the product table can be manufactured as both standard and Gold version.

Shaft diameter range		Nominal dimensions					Designation
d_1 min.	max.	d_1	D ±0.063	b_1 ±0.031	b ±0.031	B[1]	
in		in					–
0.472	**0.475**	0.472	0.610	0.236	0.331	1.875	**99049**
0.498	**0.502**	0.500	0.610	0.250	0.344	2.000	**99050**
0.547	**0.551**	0.551	0.750	0.250	0.391	1.831	**99055**
0.560	**0.566**	0.563	0.750	0.250	0.391	1.831	**99056**
0.589	**0.593**	0.591	0.750	0.197	0.354	1.862	**99059**
0.623	**0.627**	0.625 0.625	0.750 0.750	0.313 0.313	0.406 0.406	2.000 2.000	**99810**[2] **99062**
0.626	**0.630**	0.630	0.718	0.313	0.438	2.000	**99058**
0.667	**0.671**	0.669	0.875	0.315	0.433	2.000	**99068**
0.682	**0.686**	0.684	0.900	0.313	0.438	2.000	**99060**
0.704	**0.709**	0.709	0.962	0.315	0.433	1.811	**99082**
0.748	**0.752**	0.750 0.750	0.945 0.945	0.313 0.313	0.438 0.438	2.000 2.000	**99811**[2] **99076**
0.759	**0.761**	0.760	0.938	0.313	0.438	2.000	**99081**
0.780	**0.784**	0.781	0.935	0.313	0.438	2.000	**99080**
0.785	**0.789**	0.787	0.930	0.315	0.433	2.000	**99078**
0.812	**0.815**	0.813	1.188	0.375	0.563	3.000	**99083**
0.857	**0.861**	0.859	1.155	0.250	0.375	2.000	**99086**
0.861	**0.866**	0.866 0.866	1.188 1.188	0.259 0.315	0.359 0.472	1.856 1.812	**99084** **99085**
0.873	**0.877**	0.875 0.875	1.094 1.094	0.313 0.313	0.438 0.438	2.000 2.000	**99812**[2] **99087**
0.908	**0.912**	0.910 0.910	1.218 1.218	0.313 0.313	0.438 0.438	1.847 1.847	**99860**[2] **99091**

[1] Possible max. distance of the rear groove from the shaft end when the installation tool supplied with the sleeve is used
[2] SKF Speedi-Sleeve Gold

Shaft diameter range		Nominal dimensions					Designation
d_1 min.	max.	d_1	D ±0.063	b_1 ±0.031	b ±0.031	B[1]	
in		in					–
0.940	**0.945**	0.945	1.130	0.313	0.438	2.000	**99092**
0.966	**0.970**	0.969	1.130	0.313	0.438	2.000	**99094**
		0.969	1.130	0.625	0.719	2.000	**99096**
0.982	**0.986**	0.984	1.300	0.313	0.433	2.000	**99813**[2]
		0.984	1.300	0.313	0.433	2.000	**99098**
0.998	**1.002**	1.000	1.219	0.313	0.438	2.000	**99814**[2]
		1.000	1.219	0.313	0.438	2.000	**99868**
1.019	**1.024**	1.024	1.313	0.315	0.472	1.813	**99103**
1.060	**1.064**	1.063	1.320	0.313	0.438	1.843	**99815**[2]
		1.063	1.320	0.313	0.438	1.843	**99106**
1.087	**1.091**	1.089	1.406	0.313	0.438	0.625	**99108**
1.100	**1.104**	1.102	1.375	0.375	0.500	1.843	**99866**[2]
		1.102	1.375	0.375	0.500	1.843	**99111**
1.123	**1.127**	1.125	1.500	0.313	0.438	0.688	**99816**[2]
		1.125	1.500	0.313	0.438	0.688	**99112**
		1.125	1.500	0.375	0.500	0.688	**99116**
1.154	**1.158**	1.156	1.350	0.375	0.500	0.688	**99865**[2]
		1.156	1.350	0.375	0.500	0.688	**99120**
1.173	**1.178**	1.175	1.400	0.313	0.438	0.688	**99122**
1.179	**1.184**	1.181	1.400	0.315	0.433	0.688	**99114**
1.185	**1.190**	1.188	1.400	0.313	0.438	0.688	**99118**
1.216	**1.222**	1.219	1.563	0.313	0.433	0.625	**99123**
1.237	**1.243**	1.240	1.540	0.315	0.438	0.688	**99141**
1.247	**1.253**	1.250	1.500	0.313	0.438	0.688	**99817**[2]
		1.250	1.500	0.313	0.438	0.688	**99125**
1.257	**1.263**	1.260	1.500	0.315	0.438	0.688	**99128**
1.297	**1.301**	1.299	1.594	0.591	0.709	1.000	**99121**
1.308	**1.314**	1.313	1.600	0.250	0.375	0.813	**99129**
1.310	**1.316**	1.313	1.594	0.500	0.625	0.813	**99818**[2]
		1.313	1.594	0.500	0.625	0.813	**99131**
1.333	**1.339**	1.339	1.625	0.500	0.625	0.813	**99134**
1.371	**1.377**	1.375	1.638	0.313	0.438	0.813	**99133**
		1.375	1.638	0.500	0.625	0.813	**99819**[2]
		1.375	1.638	0.500	0.625	0.813	**99138**
1.375	**1.381**	1.375	1.638	0.512	0.630	0.813	**99820**[2]
		1.375	1.638	0.512	0.630	0.813	**99139**
1.411	**1.417**	1.417	1.781	0.512	0.669	0.984	**99146**
1.432	**1.438**	1.438	1.781	0.563	0.688	1.016	**99821**[2]
		1.438	1.781	0.563	0.688	1.016	**99143**
1.435	**1.441**	1.438	1.781	0.375	0.500	1.016	**99144**
1.490	**1.496**	1.496	1.781	0.512	0.669	0.984	**99147**

[1] Possible max. distance of the rear groove from the shaft end when the installation tool supplied with the sleeve is used
[2] SKF Speedi-Sleeve Gold

d_1 1.497–2.243

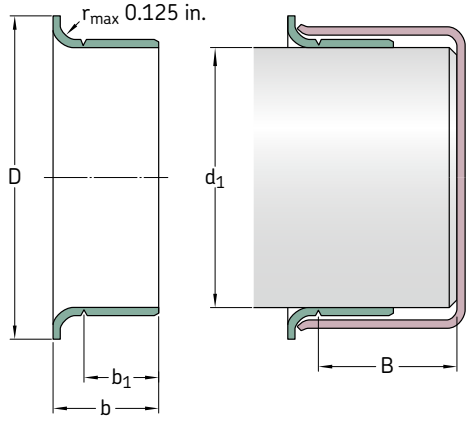

All sleeves listed in the product table can be manufactured as both standard and Gold version.

Shaft diameter range		Nominal dimensions					Designation
d_1 min.	max.	d_1	D ±0.063	b_1 ±0.031	b ±0.031	B[1]	
in		in					–
1.497	**1.503**	1.500	1.781	0.375	0.500	1.016	**99823**[2]
		1.500	1.781	0.375	0.500	1.016	**99150**
		1.500	1.781	0.563	0.688	1.016	**99822**[2]
		1.500	1.781	0.563	0.688	1.016	**99149**
1.520	**1.526**	1.523	1.859	0.438	0.563	1.016	**99152**
1.549	**1.555**	1.552	1.859	0.438	0.563	1.016	**99155**
1.559	**1.565**	1.562	1.859	0.563	0.688	1.016	**99824**[2]
		1.562	1.859	0.563	0.688	1.016	**99156**
1.566	**1.572**	1.569	1.859	0.625	0.750	1.016	**99159**
1.569	**1.575**	1.575	1.850	0.390	0.509	1.000	**99153**
1.572	**1.578**	1.578	1.850	0.512	0.630	1.023	**99825**[2]
		1.578	1.850	0.512	0.630	1.023	**99157**
1.602	**1.608**	1.605	1.938	0.500	0.641	1.000	**99160**
1.608	**1.614**	1.614	1.938	0.500	0.625	1.016	**99163**
1.622	**1.628**	1.625	1.875	0.313	0.438	1.016	**99161**
		1.625	1.875	0.563	0.688	0.813	**99826**[2]
		1.625	1.875	0.563	0.688	0.813	**99162**
1.647	**1.654**	1.650	2.087	0.445	0.571	0.846	**99166**
		1.650	2.087	0.563	0.689	0.827	**99169**
		1.654	2.087	0.563	0.689	0.827	**99873**[2]
1.653	**1.659**	1.656	2.087	0.550	0.689	0.827	**99165**
1.684	**1.690**	1.688	1.906	0.563	0.688	0.875	**99168**
1.685	**1.691**	1.688	1.906	0.313	0.438	0.875	**99167**
1.687	**1.693**	1.693	1.906	0.500	0.625	0.844	**99182**
1.715	**1.721**	1.719	2.031	0.563	0.688	0.813	**99171**
1.736	**1.742**	1.739	2.063	0.375	0.500	0.813	**99170**
1.747	**1.753**	1.750	2.055	0.375	0.500	0.813	**99172**

[1] Possible max. distance of the rear groove from the shaft end when the installation tool supplied with the sleeve is used
[2] SKF Speedi-Sleeve Gold

Shaft diameter range		Nominal dimensions					Designation
d_1 min.	max.	d_1	D ±0.063	b_1 ±0.031	b ±0.031	B[1]	
in		in					–
		1.750	2.063	0.531	0.625	0.878	**99180**
		1.750	2.063	0.563	0.688	0.813	**99827**[2]
		1.750	2.063	0.563	0.688	0.813	**99174**
		1.750	2.063	0.750	0.875	0.813	**99828**[2]
		1.750	2.063	0.750	0.875	0.813	**99175**
1.761	**1.767**	1.766	2.063	0.563	0.688	0.813	**99829**[2]
		1.766	2.063	0.563	0.688	0.813	**99176**
1.769	**1.775**	1.772	2.087	0.551	0.669	0.812	**99830**[2]
		1.772	2.087	0.551	0.669	0.812	**99177**
1.778	**1.784**	1.781	2.125	0.667	0.800	1.062	**99179**
1.809	**1.815**	1.813	2.090	0.563	0.688	1.000	**99831**[2]
		1.813	2.090	0.563	0.688	1.000	**99181**
1.857	**1.863**	1.859	2.156	0.563	0.688	1.000	**99185**
1.866	**1.872**	1.868	2.188	0.889	1.025	1.000	**99186**
1.872	**1.878**	1.875	2.203	0.175	0.295	0.744	**99190**
		1.875	2.203	0.295	0.415	0.744	**99188**
		1.875	2.203	0.375	0.516	1.050	**99184**
		1.875	2.203	0.563	0.688	1.000	**99832**[2]
		1.875	2.203	0.563	0.688	1.000	**99187**
1.887	**1.893**	1.891	2.205	0.551	0.668	0.984	**99189**
1.909	**1.915**	1.912	2.219	0.375	0.500	1.000	**99192**
1.934	**1.940**	1.938	2.219	0.563	0.688	1.000	**99833**[2]
		1.938	2.219	0.563	0.688	1.000	**99193**
1.965	**1.971**	1.969	2.244	0.551	0.668	1.350	**99052**
		1.969	2.244	0.551	0.668	0.984	**99196**
1.977	**1.983**	1.980	2.313	0.563	0.704	1.050	**99198**
1.997	**2.003**	2.000	2.406	0.563	0.688	1.006	**99834**[2]
		2.000	2.406	0.563	0.688	1.000	**99199**
		2.000	2.406	0.875	1.000	1.000	**99835**[2]
		2.000	2.406	0.875	1.000	1.000	**99200**
2.040	**2.047**	2.047	2.469	0.500	0.625	1.359	**99878**
2.057	**2.063**	2.063	2.469	0.781	0.938	1.375	**99205**
2.123	**2.128**	2.125	2.422	0.500	0.750	1.281	**99210**
2.124	**2.130**	2.125	2.422	0.781	0.938	1.375	**99836**[2]
		2.125	2.422	0.781	0.938	1.375	**99212**
2.162	**2.168**	2.165	2.441	0.787	0.905	1.250	**99863**[2]
		2.165	2.441	0.787	0.905	1.250	**99215**
2.186	**2.192**	2.188	2.500	0.781	0.938	1.313	**99218**
2.198	**2.205**	2.205	2.531	0.500	0.625	1.313	**99220**
		2.205	2.531	0.779	0.936	3.150	**99224**
2.227	**2.233**	2.230	2.531	0.500	0.625	1.313	**99861**[2]
		2.230	2.531	0.500	0.625	1.313	**99229**
		2.230	2.531	0.781	0.906	1.250	**99230**
2.237	**2.243**	2.240	2.563	0.764	0.900	1.250	**99226**

[1] Possible max. distance of the rear groove from the shaft end when the installation tool supplied with the sleeve is used
[2] SKF Speedi-Sleeve Gold

d_1 2.249–3.150

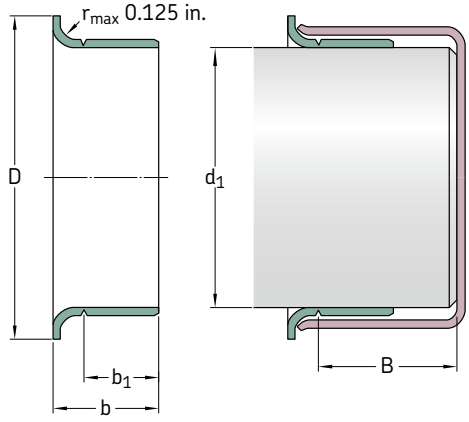

All sleeves listed in the product table can be manufactured as both standard and Gold version.

Shaft diameter range		Nominal dimensions					Designation
d_1 min.	max.	d_1	D ±0.063	b_1 ±0.031	b ±0.031	B[1]	
in		in					–
2.249	**2.255**	2.250	2.531	0.313	0.438	1.313	**99838**[2]
		2.250	2.531	0.313	0.438	1.313	**99227**
		2.250	2.531	0.781	0.938	1.313	**99837**[2]
		2.250	2.531	0.781	0.938	1.313	**99225**
2.280	**2.286**	2.283	2.598	0.787	0.938	1.375	**99219**
2.309	**2.315**	2.313	2.688	0.781	0.938	1.375	**99231**
2.327	**2.333**	2.328	2.750	0.750	0.875	1.500	**99233**
2.359	**2.365**	2.362	2.785	0.370	0.450	1.471	**99241**
		2.362	2.785	0.787	0.905	1.375	**99869**[2]
		2.362	2.785	0.787	0.905	1.375	**99235**
2.372	**2.378**	2.375	2.750	0.594	0.750	1.375	**99238**
2.374	**2.380**	2.375	2.750	0.526	0.683	1.375	**99240**
		2.375	2.750	0.781	0.938	1.375	**99839**[2]
		2.375	2.750	0.781	0.938	1.375	**99237**
2.434	**2.441**	2.438	2.828	0.781	0.938	1.393	**99243**
		2.441	2.828	0.500	0.625	1.425	**99244**
2.435	**2.441**	2.438	2.828	0.500	0.625	1.425	**99242**
2.489	**2.495**	2.492	2.875	0.781	0.938	1.393	**99249**
2.497	**2.503**	2.500	2.820	0.555	0.650	0.890	**99253**
2.500	**2.506**	2.500	2.828	0.500	0.656	1.393	**99248**
		2.500	2.820	0.781	0.938	1.375	**99840**[2]
		2.500	2.820	0.781	0.938	1.375	**99250**
2.510	**2.516**	2.516	2.828	0.781	0.906	1.438	**99251**
2.556	**2.562**	2.559	2.850	0.787	0.905	1.375	**99841**[2]
		2.559	2.850	0.787	0.905	1.375	**99254**
2.560	**2.566**	2.563	2.891	0.781	0.938	1.375	**99256**
2.595	**2.601**	2.598	2.990	0.781	0.938	1.250	**99259**
2.618	**2.624**	2.621	3.047	0.781	0.938	1.375	**99261**

[1] Possible max. distance of the rear groove from the shaft end when the installation tool supplied with the sleeve is used
[2] SKF Speedi-Sleeve Gold

Shaft diameter range		Nominal dimensions					Designation
d_1 min.	max.	d_1	D ±0.063	b_1 ±0.031	b ±0.031	B[1]	
in		in					–
2.621	**2.627**	2.625	3.047	0.781	0.906	1.375	**99264**
2.622	**2.628**	2.625	3.047	0.500	0.625	1.375	**99260**
2.625	**2.631**	2.625	3.047	0.781	0.938	1.375	**99842**[2]
		2.625	3.047	0.781	0.938	1.375	**99262**
2.670	**2.677**	2.677	3.125	0.750	0.875	1.688	**99266**
2.727	**2.733**	2.730	3.125	0.781	0.906	1.313	**99268**
2.740	**2.746**	2.743	3.065	0.781	0.938	1.250	**99273**
2.745	**2.751**	2.750	3.125	0.781	0.938	1.250	**99843**[2]
		2.750	3.125	0.781	0.938	1.250	**99274**
2.747	**2.753**	2.750	3.075	1.438	1.625	1.625	**99267**
2.750	**2.756**	2.750	3.125	0.406	0.563	1.250	**99272**
		2.750	3.125	0.781	0.938	1.250	**99844**[2]
		2.750	3.125	0.781	0.938	1.250	**99275**
		2.750	3.125	1.125	1.250	1.312	**99269**
2.753	**2.759**	2.756	3.125	0.787	0.945	1.250	**99276**
2.809	**2.815**	2.813	3.188	0.594	0.688	1.250	**99281**
2.828	**2.835**	2.835	3.225	0.750	0.875	1.343	**99870**[2]
		2.835	3.225	0.750	0.875	1.343	**99284**
2.838	**2.844**	2.838	3.225	0.500	0.656	1.250	**99845**[2]
		2.838	3.225	0.500	0.656	1.250	**99282**
2.866	**2.872**	2.869	3.188	0.781	0.938	1.250	**99286**
2.873	**2.879**	2.875	3.219	0.781	0.938	1.250	**99846**[2]
		2.875	3.219	0.781	0.938	1.250	**99287**
2.937	**2.943**	2.938	3.344	0.500	0.641	1.331	**99290**
		2.938	3.344	0.781	0.938	1.313	**99847**[2]
		2.940	3.344	0.781	0.938	1.313	**99293**
2.950	**2.956**	2.953	3.273	0.594	0.690	1.083	**99289**
		2.953	3.305	0.866	1.024	1.313	**99875**[2]
		2.953	3.305	0.866	1.024	1.313	**99294**
2.972	**2.976**	2.974	3.235	0.813	1.000	1.250	**99292**
2.990	**2.996**	2.993	3.359	0.484	0.625	1.331	**99291**
		2.993	3.359	0.563	0.688	1.375	**99298**
		2.993	3.350	0.813	1.000	1.281	**99299**
2.997	**3.003**	3.000	3.240	0.813	0.938	1.375	**99296**
3.000	**3.006**	3.000	3.345	0.625	0.813	1.280	**99048**
		3.000	3.235	0.813	1.000	1.281	**99848**[2]
		3.000	3.235	0.813	1.000	1.281	**99300**
3.008	**3.014**	3.011	3.355	0.500	0.625	2.000	**99301**
3.064	**3.071**	3.071	3.468	0.750	0.875	2.056	**99306**
3.120	**3.126**	3.125	3.531	0.688	0.813	2.000	**99311**
		3.125	3.531	0.813	1.000	2.000	**99849**[2]
		3.125	3.531	0.813	1.000	2.000	**99312**
3.124	**3.132**	3.125	3.525	0.551	0.709	2.031	**99053**
3.142	**3.150**	3.150	3.540	0.750	0.886	1.375	**99313**

[1] Possible max. distance of the rear groove from the shaft end when the installation tool supplied with the sleeve is used
[2] SKF Speedi-Sleeve Gold

d_1 3.146–4.693

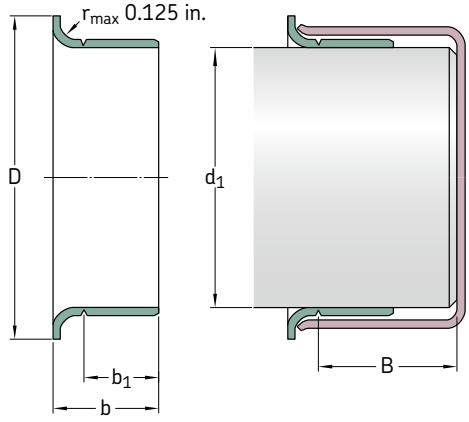

All sleeves listed in the product table can be manufactured as both standard and Gold version.

Shaft diameter range		Nominal dimensions					Designation
d_1 min.	max.	d_1	D ±0.063	b_1 ±0.031	b ±0.031	B[1]	
in		in					–
3.146	**3.153**	3.150	3.543	0.433	0.591	1.375	**99317**
		3.150	3.543	0.827	0.945	1.375	**99315**
3.225	**3.231**	3.228	3.585	0.660	0.848	1.750	**99328**
3.247	**3.253**	3.250	3.594	0.813	1.000	1.375	**99322**
3.250	**3.256**	3.250	3.575	0.595	0.719	1.375	**99850**[2]
		3.250	3.575	0.595	0.719	1.375	**99324**
		3.250	3.585	0.688	0.875	1.250	**99326**
		3.250	3.585	0.813	1.000	1.375	**99851**[2]
		3.250	3.585	0.813	1.000	1.375	**99325**
3.307	**3.313**	3.310	3.688	0.813	1.000	1.375	**99331**
3.337	**3.347**	3.342	3.700	0.669	0.827	1.378	**99332**
		3.342	3.700	0.827	0.984	1.378	**99872**[2]
		3.342	3.700	0.827	0.984	1.378	**99333**
3.338	**3.347**	3.347	3.580	0.399	0.499	1.431	**99334**
3.373	**3.379**	3.375	3.688	0.375	0.500	1.410	**99338**
		3.375	3.695	0.813	1.000	1.375	**99337**
3.435	**3.441**	3.438	3.844	0.781	0.906	1.406	**99339**
3.457	**3.465**	3.465	3.751	1.150	1.349	1.673	**99481**
3.477	**3.483**	3.480	3.835	0.781	0.906	1.406	**99340**
3.497	**3.503**	3.500	3.844	0.625	0.813	1.347	**99346**
3.500	**3.506**	3.500	3.825	0.313	0.500	1.347	**99347**
		3.500	3.844	0.813	1.000	1.347	**99852**[2]
		3.500	3.844	0.813	1.000	1.347	**99350**
3.501	**3.507**	3.504	3.844	0.625	0.813	1.348	**99349**
3.540	**3.546**	3.543	4.000	0.438	0.538	1.813	**99352**
		3.543	4.000	0.526	0.667	1.750	**99353**
		3.543	4.000	0.710	0.906	1.813	**99351**
		3.543	4.000	0.906	1.102	1.750	**99354**
3.560	**3.566**	3.563	3.900	0.813	1.000	1.750	**99356**

[1] Possible max. distance of the rear groove from the shaft end when the installation tool supplied with the sleeve is used
[2] SKF Speedi-Sleeve Gold

Shaft diameter range		Nominal dimensions					Designation
d_1 min.	max.	d_1	D ±0.063	b_1 ±0.031	b ±0.031	B[1]	
in		in					–
3.618	**3.624**	3.621	4.031	0.813	1.000	1.750	**99360**
3.623	**3.629**	3.625	4.025	0.500	0.625	1.750	**99363**
		3.625	4.031	0.813	1.000	1.750	**99362**
3.684	**3.690**	3.688	4.031	0.313	0.438	0.875	**99368**
3.685	**3.691**	3.688	4.025	0.813	0.938	1.800	**99365**
3.727	**3.733**	3.730	4.016	0.469	0.594	1.800	**99359**
		3.730	4.025	0.781	0.906	1.800	**99366**
3.737	**3.743**	3.740	4.025	0.827	0.945	1.800	**99369**
3.740	**3.746**	3.743	4.031	0.344	0.500	1.800	**99374**
		3.743	4.035	0.469	0.594	1.800	**99364**
3.746	**3.752**	3.749	4.025	0.563	0.688	1.800	**99376**
3.750	**3.756**	3.750	4.020	0.688	0.875	1.800	**99853**[2]
		3.753	4.025	0.344	0.500	1.800	**99367**
		3.753	4.020	0.688	0.875	1.800	**99372**
3.868	**3.874**	3.871	4.185	0.813	1.000	1.875	**99386**
3.873	**3.879**	3.875	4.219	0.813	1.000	1.875	**99387**
3.935	**3.941**	3.938	4.313	0.813	1.000	2.050	**99854**[2]
		3.938	4.313	0.813	1.000	2.050	**99393**
3.998	**4.006**	4.000	4.375	0.500	0.625	2.066	**99401**
		4.000	4.375	0.600	0.725	2.050	**99395**
		4.000	4.375	0.650	0.775	1.375	**99400**
		4.000	4.375	0.813	1.000	2.050	**99855**[2]
		4.000	4.375	0.813	1.000	2.050	**99399**
4.090	**4.098**	4.094	4.438	0.787	0.945	1.417	**99409**
4.122	**4.130**	4.125	4.470	0.813	1.000	1.375	**99412**
4.130	**4.138**	4.134	4.470	0.787	0.913	1.378	**99413**
4.183	**4.191**	4.188	4.500	0.813	1.000	1.375	**99418**
4.226	**4.234**	4.234	4.610	0.781	0.906	1.438	**99423**
4.248	**4.256**	4.250	4.610	0.813	1.000	1.438	**99424**
4.322	**4.331**	4.331	4.921	0.448	0.589	1.297	**99434**
4.327	**4.335**	4.328	4.921	0.509	0.650	1.250	**99435**
4.370	**4.378**	4.375	4.750	0.813	1.000	1.650	**99437**
4.401	**4.409**	4.409	4.750	0.750	0.886	1.300	**99438**
4.434	**4.442**	4.438	4.813	1.000	1.142	1.313	**99439**
4.496	**4.504**	4.500	4.850	0.813	1.000	1.250	**99856**[2]
		4.500	4.900	0.813	1.000	1.250	**99450**
4.523	**4.531**	4.528	5.000	0.813	0.938	1.250	**99452**
4.621	**4.629**	4.625	5.000	0.438	0.625	1.375	**99465**
		4.625	5.063	1.000	1.250	1.375	**99463**
4.685	**4.693**	4.688	5.063	0.813	1.000	1.375	**99468**

[1] Possible max. distance of the rear groove from the shaft end when the installation tool supplied with the sleeve is used
[2] SKF Speedi-Sleeve Gold

d_1 4.720–8.005

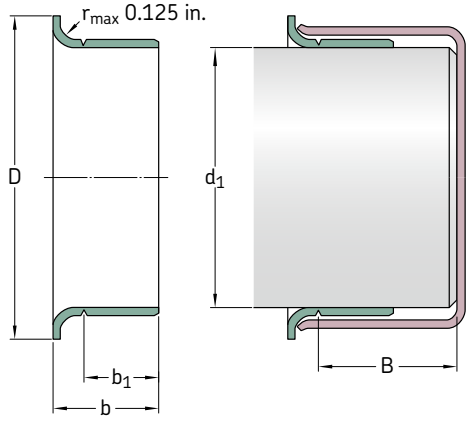

All sleeves listed in the product table can be manufactured as both standard and Gold version.

Shaft diameter range		Nominal dimensions					Designation
d_1 min.	max.	d_1	D ±0.063	b_1 ±0.031	b ±0.031	B[1]	
in		in					–
4.720	**4.728**	4.724	5.110	0.315	0.433	1.323	**99471**
		4.724	5.110	0.787	0.984	1.260	**99473**
4.746	**4.754**	4.750	5.000	0.500	0.750	1.500	**99475**
4.799	**4.807**	4.803	5.177	0.787	0.945	1.260	**99472**
4.839	**4.847**	4.843	5.229	0.787	0.984	1.244	**99484**
4.871	**4.879**	4.875	5.250	0.625	0.750	1.438	**99487**
4.917	**4.925**	4.921	5.400	0.394	0.551	1.438	**99490**
		4.921	5.400	1.024	1.260	1.438	**99492**
4.998	**5.006**	5.000	5.400	0.540	0.681	1.438	**99501**
		5.000	5.400	0.688	0.875	1.438	**99857**[2]
		5.000	5.400	0.688	0.875	1.438	**99498**
		5.000	5.390	0.813	1.000	1.438	**99858**[2]
		5.000	5.390	0.813	1.000	1.438	**99499**
5.032	**5.039**	5.039	5.325	1.150	1.349	1.587	**99482**
5.110	**5.118**	5.114	5.493	0.750	0.938	1.181	**99494**
5.117	**5.125**	5.118	5.493	0.866	0.996	1.280	**99874**[2]
		5.125	5.493	0.866	0.996	1.280	**99491**
5.120	**5.128**	5.125	5.500	0.813	1.000	1.250	**99513**
5.246	**5.254**	5.250	5.560	0.813	1.000	1.250	**99525**
5.307	**5.315**	5.311	5.735	0.807	1.000	1.250	**99533**
5.371	**5.379**	5.375	5.875	0.813	1.000	1.250	**99537**
5.434	**5.442**	5.438	5.750	1.500	1.688	1.875	**99548**
5.472	**5.480**	5.476	5.900	0.563	0.750	1.234	**99547**
5.498	**5.506**	5.500	5.938	0.518	0.705	1.250	**99550**
		5.500	5.938	0.813	1.000	1.250	**99859**[2]
		5.500	5.938	0.813	1.000	1.250	**99549**

[1] Possible max. distance of the rear groove from the shaft end when the installation tool supplied with the sleeve is used
[2] SKF Speedi-Sleeve Gold

Shaft diameter range		Nominal dimensions					Designation
d_1 min.	max.	d_1	D ±0.063	b_1 ±0.031	b ±0.031	B[1]	
in		in					–
5.508	**5.516**	5.512	5.945	0.807	1.000	1.250	**99552**
5.621	**5.629**	5.625	6.188	0.875	1.000	1.812	**99560**
5.699	**5.709**	5.709	6.100	0.750	0.875	1.812	**99571**
5.726	**5.734**	5.734	6.100	0.563	0.750	1.938	**99562**
5.746	**5.754**	5.750	6.180	0.813	1.000	1.750	**99575**
5.871	**5.879**	5.875 5.875	6.188 6.188	1.000 1.000	1.250 1.250	1.313 1.313	**99862**[2] **99587**
5.896	**5.906**	5.905	6.260	1.024	1.181	1.280	**99595**
5.934	**5.942**	5.938	6.375	1.000	1.125	1.875	**99596**
5.995	**6.003**	6.000 6.000	6.360 6.375	0.500 1.000	0.750 1.250	1.750 1.750	**99601** **99599**
6.058	**6.068**	6.063	6.375	1.024	1.181	1.299	**99605**
6.092	**6.102**	6.097	6.575	1.024	1.181	1.299	**99606**
6.198	**6.208**	6.203	6.625	0.813	1.063	1.750	**99620**
6.245	**6.255**	6.250	6.625	1.031	1.250	1.750	**99625**
6.289	**6.299**	6.299	6.750	1.000	1.250	1.375	**99630**
6.495	**6.505**	6.500	7.000	1.000	1.250	1.375	**99650**
6.683	**6.693**	6.688	7.188	1.250	1.496	1.750	**99640**
6.745	**6.755**	6.750	7.125	0.813	1.063	1.750	**99675**
6.880	**6.890**	6.890	7.362	1.102	1.260	1.378	**99687**
6.995	**7.005**	7.000 7.000	7.475 7.475	1.000 1.000	1.250 1.250	1.688 1.688	**99864**[2] **99700**
7.077	**7.087**	7.087	7.500	1.299	1.496	1.752	**99721**
7.244	**7.254**	7.250	7.760	1.250	1.500	2.175	**99725**
7.273	**7.283**	7.278	7.760	1.260	1.496	2.165	**99726**
7.444	**7.454**	7.453	7.860	0.813	1.000	1.250	**99745**
7.495	**7.505**	7.500	7.875	0.813	1.000	1.250	**99750**
7.745	**7.755**	7.750	8.270	1.000	1.313	1.875	**99775**
7.869	**7.879**	7.875	8.375	1.359	1.500	1.750	**99787**
7.933	**7.943**	7.938	8.375	1.000	1.250	1.750	**99799**
7.995	**8.005**	8.000	8.375	1.000	1.250	1.750	**99800**

[1] Possible max. distance of the rear groove from the shaft end when the installation tool supplied with the sleeve is used
[2] SKF Speedi-Sleeve Gold

B.2 Wear sleeves for heavy industrial applications (LDSLV)

1

SINGLE PIECE ORDER POSSIBLE!

Wear sleeves for heavy industrial applications (LDSLV)

- Minimal downtime
- Flexible in dimensions

Wear sleeves for heavy industrial applications (LDSLV) – general

SKF wear sleeves for heavy applications are available in a range of sizes. Within this range, LDSLV4 in customized dimensions are created as required without any new tooling. In addition, the minimum order quantity is just one sleeve, enabling a flexible solution for any heavy duty application, no matter how big or small the job. Contact your SKF sales representative for additional information.

Table 1

LDSLV4 is flexible in size within the range

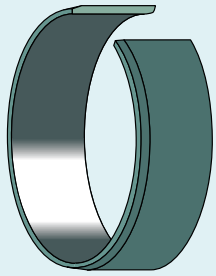

Shaft range over		incl.		**Width**[1] min.		max.	
mm	*in*	mm	*in*	mm	*in*	mm	*in*
211,15	*8.313*	736,60	*29.000*	12,70	*0.500*	63,50	*2.500*
736,60	*29.000*	1 143,00	*45.000*	19,05	*0.750*	63,50	*2.500*

[1] Total width (b), 38,10 to 50,80 mm (*1.5 to 2 in*) at 1 143,00 mm (*45 in*) shaft diameter

Contact SKF for LDSLV4 designs outside the primary size range.

Designs and features

SKF wear sleeves for heavy industrial applications are available in the LDSLV4 design (→ **fig. 1**) made of SAE 1008 chromium-plated carbon steel to enhance wear and corrosion resistance. Other sleeve materials can be provided to meet the application's specific demands. The sleeve outside diameter is specially ground to provide a precision counterface surface for the seal. The wall thickness of the standard sleeves is 2,39 mm (*0.094 in*).

SKF wear sleeves for heavy applications are available in a range of sizes. Within this range, LDSLV4 in customized dimensions are created as required without any new tooling. In addition, the minimum order quantity is just one sleeve, enabling a flexible solution for any heavy duty application, no matter how big or small the job. Contact your SKF sales representative for additional information.

Using LDSLV designs

There are two alternative ways of using SKF wear sleeves for heavy industrial applications (→ **fig. 2 and table 2 on page 266**):

1. The sleeve is positioned on the shaft until it covers the damaged part and a new seal, designed for a 4,78 mm (*0.188 in*) larger shaft diameter, is used.
2. The shaft is machined down by 4,78 mm (*0.188 in*) in diameter, the sleeve is installed and the original seal size is used.

The reworked shaft surface for the sleeve should have a surface roughness between R_a 2,5 and 3,2 µm (*100 to 125 µin*)

NOTE
The shaft tolerances for LDSLV designs, due to their heated slip-fit installation, are different from those for radial shaft seals. Contact SKF for assistance if the sleeves are to be used in systems with sustained temperatures higher than 75 °C (*165 °F*) and surface speeds in excess of 20 m/s (*3 900 ft/min*).

Fig. 1

LDSLV4

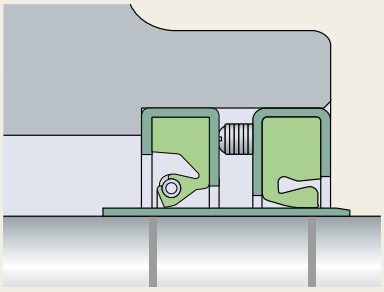

Fig. 2

Using LDSLV4 designs

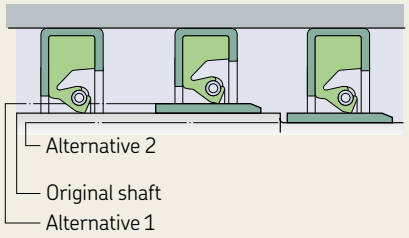

Installation

SKF wear sleeves for heavy industrial applications are designed for a heated slip-fit installation and must therefore be **uniformly heated** prior to installation. The sleeve temperature should be approximately 180 °C (*355 °F*). Under no circumstances should the sleeve be heated to above 200 °C (*390 °F*). Any heating techniques normally used for bearings are suitable, such as induction heaters or heating cabinets.

The sleeves should be installed immediately after heating since they cool rapidly and could seize on the shaft before the correct position is achieved. If repositioning is necessary, use a soft faced hammer and a wooden block. After the sleeve is in the desired position, check the lead-in chamfer for any damage during installation.

Removal

The wear sleeves can be removed either by heating them or expanding them by light hammer blows.

Table 2

Installation

Option I: No shaft machining is required. However, a seal designed for a nominal shaft size (4.8 mm (*0.188 in*) larger than the original needs to be used. SKF's broad size coverage and wide range of shaft / bore combinations for large diameter seals makes this the most popular installation method.

Option II: Before installation, the shaft needs to be machined to 4,8 mm (*0.188 in*) below its original diameter and finished to 10–125 micro-inches R_a (arithmetic average), to allow use of the same sized original seal. This method enables to keep the same seal size and designation and does not increase the need for additional seal inventories.

Shaft		**Sleeve (metal I.D.)**	
Diameter	Tolerance	Nominal press fit	I.D. tolerance
up to 50,8 mm (*up to 2.000 in*)	±0,025 mm (*±0.001 in*)	0,127 mm (*0.005 in*)	0,051 mm (*0.002 in*)
50,8 to 76,2 mm (*2.001 to 3.000 in*)	±0,025 mm (*±0.001 in*)	0,127 mm (*0.005 in*)	+0,051 mm –0,076 mm (*+0.002 in –0.003 in*)
76,2 to 127 mm (*3.001 to 5.000 in*)	±0,038 mm (*±0.0015 in*)	0,127 mm (*0.005 in*)	+0,051 mm –0,102 mm (*+0.002 in –0.004 in*)
127 to 177,8 mm (*5.001 to 7.000 in*)	±0,038 mm (*±0.0015 in*)	0,152 mm (*0.006 in*)	+0,051 mm –0,102 mm (*+0.002 in –0.004 in*)
177,8 to 304,8 mm (*7.001 to 12.000 in*)	±0 ,051 mm (*±0.002 in*)	0,178 mm (*0.007 in*)	+0,051 mm –0,127 mm (*+0.002 in –0.005 in*)
304,8 to 508 mm (*12.001 to 20.000 in*)	+0,102 mm –0,051 mm (*+0.004 in –0.002 in*)	0,203 mm (*0.008 in*)	+0,051 mm –0,203 mm (*+0.007 in –0.008 in*)
508 to 1 016 mm (*20.001 to 40.000 in*)	+0,203 mm –0,051 mm (*+0.008 in –0.002 in*)	0,203 mm (*0.008 in*)	+0,051 mm –0,203 mm (*+0.007 in –0.008 in*)
1 016 to 1 524 mm (*40.001 to 60.000 in*)	+0,254 mm –0,051 mm (*+0.010 in –0.002 in*)	0,203 mm (*0.008 in*)	+0,081 mm –0,254 mm (*+0.002 in –0.010 in*)

Note: Please contact SKF for recommendations concerning large diameter wear sleeves that will operate in systems with sustained oil sump temperatures higher than 76,7 °C (*170 °F*) and surface speed exceeding 20 m/s (*3 950 ft/min*).

d_1 235,23–1 100,23

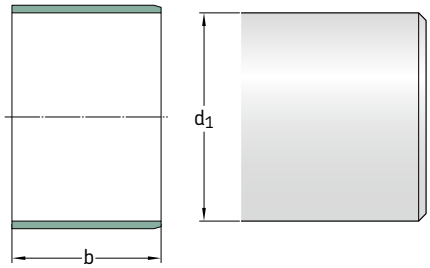

Shaft diameter d_1	Sleeve width b	Reference sleeve installed outside diameter	Design	Designation
mm	mm	mm	–	–
235,23	18	240	LDSLV4	**90952**
240,21	44	245	LDSLV4	**87911**
275,00	22	280	LDSLV4	**90546**
280,00	45	285	LDSLV4	**90437**
285,22	63,50	290	LDSLV4	**90238**
315,19	63,50	320	LDSLV4	**90155**
320,00	63,50	325	LDSLV4	**90198**
325,22	63,50	330	LDSLV4	**90239**
335,22	39	340	LDSLV4	**90777**
	50	340	LDSLV4	**90792**
340,00	18	340	LDSLV4	**87901**
	50	340	LDSLV4	**90801**
355,20	25,40	360	LDSLV4	**90778**
	50	360	LDSLV4	**90785**
360,00	44	365	LDSLV4	**87500**
360,22	45	365	LDSLV4	**90788**
365,20	20	370	LDSLV4	**87531**
395,22	63,50	400	LDSLV4	**87461**
405,23	50	410	LDSLV4	**90042**
435,20	63,50	440	LDSLV4	**87916**
455,00	30	460	LDSLV4	**90347**
455,20	50	460	LDSLV4	**87504**
475,18	20	480	LDSLV4	**87921**
494,44	24	500	LDSLV4	**90259**
495,20	30	500	LDSLV4	**87503**

Shaft diameter d_1	Sleeve width b	Reference sleeve installed outside diameter	Design	Designation
mm	mm	mm	–	–
503,25	24	508	LDSLV4	**90149**
530,00	20	535	LDSLV4	**87783**
535,23	63	540	LDSLV4	**90802**
555,20	63,50	560	LDSLV4	**90075**
575,23	63,50	580	LDSLV4	**90951**
585,22	55	590	LDSLV4	**90292**
595,20	63,50	600	LDSLV4	**89997**
645,20	64	650	LDSLV4	**90004**
665,20	45	670	LDSLV4	**90799**
685,22	63,50	690	LDSLV4	**90953**
714,81	50	720	LDSLV4	**87820**
735,23	63	740	LDSLV4	**89949**
865,23	63,50	870	LDSLV4	**90221**
875,18	63,50	880	LDSLV4	**90103**
1 015,20	25	1 020	LDSLV4	**90786**
1 049,33	60	1 054	LDSLV4	**89947**
1 100,23	63	1 105	LDSLV4	**89946**

d_1 8.313–16.812

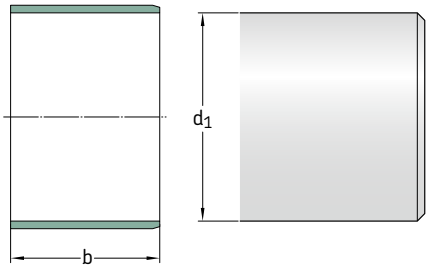

Shaft diameter d_1	Sleeve width b	Reference sleeve installed outside diameter	Design	Designation
in/*mm*	in/*mm*	in/*mm*	–	–
8.313 *211,15*	1.250 *31,75*	8.501 *215,93*	LDSLV4	**85885**
8.353 *212,17*	1.500 *38,10*	8.541 *216,94*	LDSLV4	**86907**
8.661 *220,00*	1.000 *25,40*	8.849 *224,76*	LDSLV4	**87319**
8.812 *223,82*	2.000 *50,80*	9.000 *228,60*	LDSLV4	**86551**
8.866 *225,20*	2.500 *63,50*	9.054 *229,97*	LDSLV4	**87166**
8.867 *225,22*	1.000 *25,40*	9.055 *230,00*	LDSLV4	**87462**
8.875 *225,43*	1.250 *31,75*	9.063 *230,20*	LDSLV4	**87526**
8.938 *227,03*	2.500 *63,50*	9.126 *231,80*	LDSLV4	**86546**
9.063 *230,20*	1.500 *38,10*	9.251 *234,98*	LDSLV4	**85931**
9.125 *231,78*	1.000 *25,40*	9.313 *236,55*	LDSLV4	**86547**
	1.500 *38,10*	9.313 *236,55*	LDSLV4	**90130**
9.250 *234,95*	0.875 *22,23*	9.438 *239,73*	LDSLV4	**84643**
9.260 *235,20*	1.102 *27,99*	9.448 *239,98*	LDSLV4	**87789**
9.449 *240,00*	1.181 *30,00*	9.637 *244,78*	LDSLV4	**87144**
9.500 *241,30*	2.500 *63,50*	9.688 *246,08*	LDSLV4	**86562**
9.563 *242,90*	1.000 *25,40*	9.751 *247,68*	LDSLV4	**85073**
	2.000 *50,80*	9.751 *247,68*	LDSLV4	**85397**
9.750 *247,65*	1.438 *36,53*	9.938 *252,43*	LDSLV4	**84965**
	2.250 *57,15*	9.938 *252,43*	LDSLV4	**85045**
9.813 *249,25*	1.125 *28,58*	10.001 *254,03*	LDSLV4	**86413**
9.835 *249,81*	1.575 *40,01*	10.023 *254,58*	LDSLV4	**90773**
10.063 *255,60*	2.250 *57,15*	10.251 *260,38*	LDSLV4	**86000**
10.188 *258,78*	1.125 *28,58*	10.376 *263,55*	LDSLV4	**84962**
10.313 *261,95*	2.000 *50,80*	10.501 *266,73*	LDSLV4	**85629**
10.441 *265,20*	2.165 *54,99*	10.629 *269,98*	LDSLV4	**86798**
10.500 *266,70*	2.750 *69,85*	10.688 *271,48*	LDSLV4	**86013**
10.557 *268,15*	2.250 *57,15*	10.745 *272,92*	LDSLV4	**85491**
10.562 *268,27*	0.984 *24,99*	10.750 *273,05*	LDSLV4	**90800**
	1.750 *44,45*	10.750 *273,05*	LDSLV4	**86468**
	1.813 *46,05*	10.750 *273,05*	LDSLV4	**86544**
10.563 *268,30*	1.500 *38,10*	10.751 *273,08*	LDSLV4	**87768**
10.750 *273,05*	2.500 *63,50*	10.938 *277,83*	LDSLV4	**86435**

Shaft diameter d_1	Sleeve width b	Reference sleeve installed outside diameter	Design	Designation
in/*mm*	in/*mm*	in/*mm*	–	–
10.813 *274,65*	2.000 *50,80*	11.001 *279,43*	LDSLV4	**85033**
10.846 *275,49*	0.709 *18,01*	11.034 *280,26*	LDSLV4	**86601**
10.875 *276,23*	2.000 *50,80*	11.063 *281,00*	LDSLV4	**84510**
11.000 *279,40*	1.500 *38,10*	11.188 *284,18*	LDSLV4	**86486**
	2.500 *63,50*	11.188 *284,18*	LDSLV4	**86454**
11.024 *280,00*	1.181 *30,00*	11.212 *284,78*	LDSLV4	**87142**
11.031 *280,19*	1.260 *32,00*	11.219 *284,96*	LDSLV4	**87525**
11.062 *280,97*	1.750 *44,45*	11.250 *285,75*	LDSLV4	**85469**
11.187 *284,15*	1.250 *31,75*	11.375 *288,93*	LDSLV4	**86269**
11.188 *284,18*	2.250 *57,15*	11.376 *288,95*	LDSLV4	**85212**
11.190 *284,23*	2.250 *57,15*	11.378 *289,00*	LDSLV4	**87566**
11.313 *287,35*	1.500 *38,10*	11.501 *292,13*	LDSLV4	**84094**
11.375 *288,93*	2.250 *57,15*	11.563 *293,70*	LDSLV4	**86145**
11.417 *290,00*	1.750 *44,45*	11.605 *294,77*	LDSLV4	**86441**
11.500 *292,10*	0.750 *19,05*	11.688 *296,88*	LDSLV4	**90761**
11.562 *293,67*	1.000 *25,40*	11.750 *298,45*	LDSLV4	**90333**
11.812 *300,02*	1.125 *28,58*	12.000 *304,80*	LDSLV4	**86687**
11.813 *300,05*	1.500 *38,10*	12.001 *304,83*	LDSLV4	**85979**
	2.750 *69,85*	12.001 *304,83*	LDSLV4	**85844**
11.969 *304,00*	0.709 *18,00*	12.157 *308,79*	LDSLV4	**86600**
12.000 *304,80*	2.250 *57,15*	12.188 *309,58*	LDSLV4	**85577**
12.063 *306,40*	0.625 *15,88*	12.251 *311,18*	LDSLV4	**85418**
12.312 *312,72*	1.500 *38,10*	12.500 *317,50*	LDSLV4	**90174**
12.313 *312,75*	0.750 *19,05*	12.501 *317,53*	LDSLV4	**83760**

Shaft diameter d_1	Sleeve width b	Reference sleeve installed outside diameter	Design	Designation
in/*mm*	in/*mm*	in/*mm*	–	–
12.750 *323,85*	0.688 *17,48*	12.938 *328,63*	LDSLV4	**87513**
12.813 *325,45*	1.000 *25,40*	13.001 *330,23*	LDSLV4	**86258**
	1.375 *34,93*	13.001 *330,23*	LDSLV4	**84263**
	2.500 *63,50*	13.001 *330,23*	LDSLV4	**86722**
13.000 *330,20*	1.750 *44,45*	13.188 *334,98*	LDSLV4	**85535**
13.063 *331,80*	1.125 *28,58*	13.251 *336,53*	LDSLV4	**84963**
13.313 *338,15*	0.813 *20,65*	13.501 *342,93*	LDSLV4	**86688**
	1.500 *38,10*	13.501 *342,93*	LDSLV4	**87463**
13.813 *350,85*	2.000 *50,80*	14.001 *355,63*	LDSLV4	**85179**
14.173 *359,99*	1.000 *25,40*	14.361 *364,77*	LDSLV4	**87445**
14.313 *363,55*	1.500 *38,10*	14.501 *368,33*	LDSLV4	**86429**
14.500 *368,30*	1.000 *25,40*	14.688 *373,08*	LDSLV4	**85914**
14.813 *376,25*	1.500 *38,10*	15.001 *381,03*	LDSLV4	**87723**
15.000 *381,00*	1.000 *25,40*	15.188 *385,78*	LDSLV4	**87247**
15.062 *382,57*	0.750 *19,05*	15.250 *387,35*	LDSLV4	**90272**
15.188 *385,78*	2.500 *63,50*	15.376 *390,55*	LDSLV4	**87569**
15.560 *395,22*	0.906 *23,01*	15.748 *400,00*	LDSLV4	**85582**
15.813 *401,65*	2.000 *50,80*	16.001 *406,43*	LDSLV4	**85181**
	2.500 *63,50*	16.001 *406,43*	LDSLV4	**86407**
16.063 *408,00*	0.500 *12,70*	16.251 *412,78*	LDSLV4	**87613**
	1.250 *31,75*	16.251 *412,78*	LDSLV4	**86175**
	1.300 *33,02*	16.251 *412,78*	LDSLV4	**86426**
	2.000 *50,80*	16.251 *412,78*	LDSLV4	**86575**
16.313 *414,35*	2.000 *50,80*	16.501 *419,13*	LDSLV4	**84697**
16.750 *425,45*	1.500 *38,10*	16.938 *430,23*	LDSLV4	**87585**
16.812 *427,02*	1.000 *25,40*	17.000 *431,80*	LDSLV4	**86737**

d_1 16.813–42.500

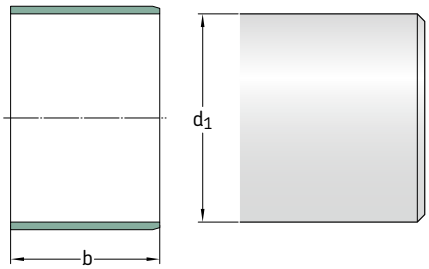

Shaft diameter d_1	Sleeve width b	Reference sleeve installed outside diameter	Design	Designation
in/*mm*	in/*mm*	in/*mm*	–	–
16.813 *427,05*	2.250 *57,15*	17.001 *431,83*	LDSLV4	**84616**
17.250 *438,15*	1.000 *25,40*	17.438 *442,93*	LDSLV4	**90779**
	2.000 *50,80*	17.438 *442,93*	LDSLV4	**84576**
17.313 *439,75*	1.500 *38,10*	17.501 *444,53*	LDSLV4	**86430**
17.449 *443,20*	2.000 *50,80*	17.637 *447,98*	LDSLV4	**85762**
17.500 *444,50*	1.250 *31,75*	17.688 *449,28*	LDSLV4	**90770**
17.543 *445,59*	2.362 *59,99*	17.731 *450,37*	LDSLV4	**86799**
17.750 *450,85*	1.250 *31,75*	17.938 *455,63*	LDSLV4	**90774**
17.812 *452,42*	2.125 *53,98*	18.000 *457,20*	LDSLV4	**87271**
18.163 *461,34*	2.000 *50,80*	18.351 *466,12*	LDSLV4	**86343**
18.312 *465,12*	1.191 *30,25*	18.500 *469,90*	LDSLV4	**90790**
18.813 *477,85*	1.750 *44,45*	19.001 *482,63*	LDSLV4	**86563**
	2.250 *57,15*	19.001 *482,63*	LDSLV4	**87015**
	2.500 *63,50*	19.001 *482,63*	LDSLV4	**86716**
19.496 *495,20*	2.362 *59,99*	19.684 *499,97*	LDSLV4	**87631**
19.497 *495,22*	1.575 *40,01*	19.685 *500,00*	LDSLV4	**87785**

Shaft diameter d_1	Sleeve width b	Reference sleeve installed outside diameter	Design	Designation
in/*mm*	in/*mm*	in/*mm*	–	–
19.500 *495,30*	1.250 *31,75*	19.688 *500,08*	LDSLV4	**90769**
19.563 *496,90*	2.750 *69,85*	19.751 *501,68*	LDSLV4	**85654**
19.813 *503,25*	1.250 *31,75*	20.001 *508,03*	LDSLV4	**84781**
20.312 *515,92*	1.000 *25,40*	20.500 *520,70*	LDSLV4	**86739**
20.813 *528,65*	2.125 *53,98*	21.001 *533,43*	LDSLV4	**85367**
	2.500 *63,50*	21.001 *533,43*	LDSLV4	**87298**
20.865 *529,97*	2.250 *57,15*	21.053 *534,75*	LDSLV4	**90805**
21.000 *533,40*	2.250 *57,15*	21.188 *538,18*	LDSLV4	**87090**
21.803 *553,80*	2.362 *59,99*	21.991 *558,57*	LDSLV4	**87069**
21.813 *554,05*	2.250 *57,15*	22.001 *558,83*	LDSLV4	**84590**
22.303 *566,50*	2.362 *59,99*	22.491 *571,27*	LDSLV4	**87070**
22.313 *566,75*	1.250 *31,75*	22.501 *571,53*	LDSLV4	**85907**
22.812 *579,42*	2.000 *50,80*	23.000 *584,20*	LDSLV4	**90163**
23.000 *584,20*	2.000 *50,80*	23.188 *588,98*	LDSLV4	**90146**
23.434 *595,22*	0.984 *24,99*	23.622 *600,00*	LDSLV4	**87777**
23.687 *601,65*	1.950 *49,53*	23.875 *606,43*	LDSLV4	**87907**

Shaft diameter d_1	Sleeve width b	Reference sleeve installed outside diameter	Design	Designation
in/*mm*	in/*mm*	in/*mm*	–	–
23.812 *604,82*	0.750 *19,05*	24.000 *609,60*	LDSLV4	**87922**
	2.500 *63,50*	24.000 *609,60*	LDSLV4	**87960**
25.000 *635,00*	2.500 *63,50*	25.188 *639,78*	LDSLV4	**86567**
25.312 *642,92*	2.000 *50,80*	25.500 *647,70*	LDSLV4	**86091**
25.313 *642,95*	2.500 *63,50*	25.501 *647,73*	LDSLV4	**87802**
26.312 *668,32*	1.375 *34,93*	26.500 *673,10*	LDSLV4	**90809**
26.813 *681,05*	1.250 *31,75*	27.001 *685,83*	LDSLV4	**85384**
	2.250 *57,15*	27.001 *685,83*	LDSLV4	**85531**
27.000 *685,80*	2.000 *50,80*	27.188 *690,58*	LDSLV4	**86841**
27.063 *687,40*	2.250 *57,15*	27.251 *692,18*	LDSLV4	**84764**
27.313 *693,75*	2.250 *57,15*	27.501 *698,53*	LDSLV4	**91331**
27.500 *698,50*	2.250 *57,15*	27.688 *703,28*	LDSLV4	**84711**
27.812 *706,42*	2.500 *63,50*	28.000 *711,20*	LDSLV4	**87421**
28.813 *731,85*	2.250 *57,15*	29.001 *736,63*	LDSLV4	**84641**
29.813 *757,25*	2.250 *57,15*	30.001 *762,03*	LDSLV4	**84642**
30.309 *769,85*	1.375 *34,93*	30.497 *774,62*	LDSLV4	**87530**
30.813 *782,65*	2.000 *50,80*	31.001 *787,43*	LDSLV4	**85039**
31.812 *808,02*	2.500 *63,50*	32.000 *812,80*	LDSLV4	**90810**
32.313 *820,75*	2.000 *50,80*	32.501 *825,53*	LDSLV4	**86090**
32.812 *833,42*	2.220 *56,39*	33.000 *838,20*	LDSLV4	**87850**
33.313 *846,15*	2.625 *66,68*	33.501 *850,93*	LDSLV4	**84730**
34.312 *871,52*	1.750 *44,45*	34.500 *876,30*	LDSLV4	**87529**
35.313 *896,95*	2.500 *63,50*	35.501 *901,73*	LDSLV4	**85814**
35.812 *909,62*	1.500 *38,10*	36.000 *914,40*	LDSLV4	**90332**
36.375 *923,93*	2.500 *63,50*	36.563 *928,70*	LDSLV4	**86111**
36.813 *935,05*	2.500 *63,50*	37.001 *939,83*	LDSLV4	**86458**
37.813 *960,45*	1.500 *38,10*	38.001 *965,23*	LDSLV4	**86973**
38.000 *965,20*	1.500 *38,10*	38.188 *969,98*	LDSLV4	**86840**
38.500 *977,90*	1.500 *38,10*	38.688 *982,68*	LDSLV4	**81753**
38.813 *985,85*	2.125 *53,98*	39.001 *990,63*	LDSLV4	**85123**
39.813 *1011,25*	2.125 *53,98*	40.001 *1016,03*	LDSLV4	**81826**
41.312 *1049,32*	1.968 *49,99*	41.500 *1054,10*	LDSLV4	**89948**
42.063 *1068,40*	2.125 *53,98*	42.251 *1073,18*	LDSLV4	**85038**
42.125 *1069,98*	2.125 *53,98*	42.313 *1074,75*	LDSLV4	**87054**
42.312 *1074,72*	1.250 *31,75*	42.500 *1079,50*	LDSLV4	**87379**
42.500 *1079,50*	1.250 *31,75*	42.688 *1084,28*	LDSLV4	**87392**

C Axial shaft seals

Axial shaft seals

General

Common for all axial shaft seals is that they seal axially against a counterface that is perpendicular to the shaft (or pin). Many axial shaft seals, like V-ring seals, are relatively simple sealing elements that are typically used as secondary seals in applications where the primary seals are subjected to large quantities of contaminants. With the exception of axial clamp seals, axial shaft seals rotate with the shaft and act as flingers. They tolerate small misalignments of the shaft with respect to the counter face and also provide reliable sealing if the shaft is out of round or rotates eccentrically

Features and benefits

Axial shaft seals are available from SKF as
- V-ring seals
- Axial clamp seals
- Metal clamp seals
- Track pin seals

C.1 Track pin seals

EXTENDED SERVICE LIFE OF THE UNDERCARRIAGE

Track pin seals

- For oil lubricated track chains
- Easy installation

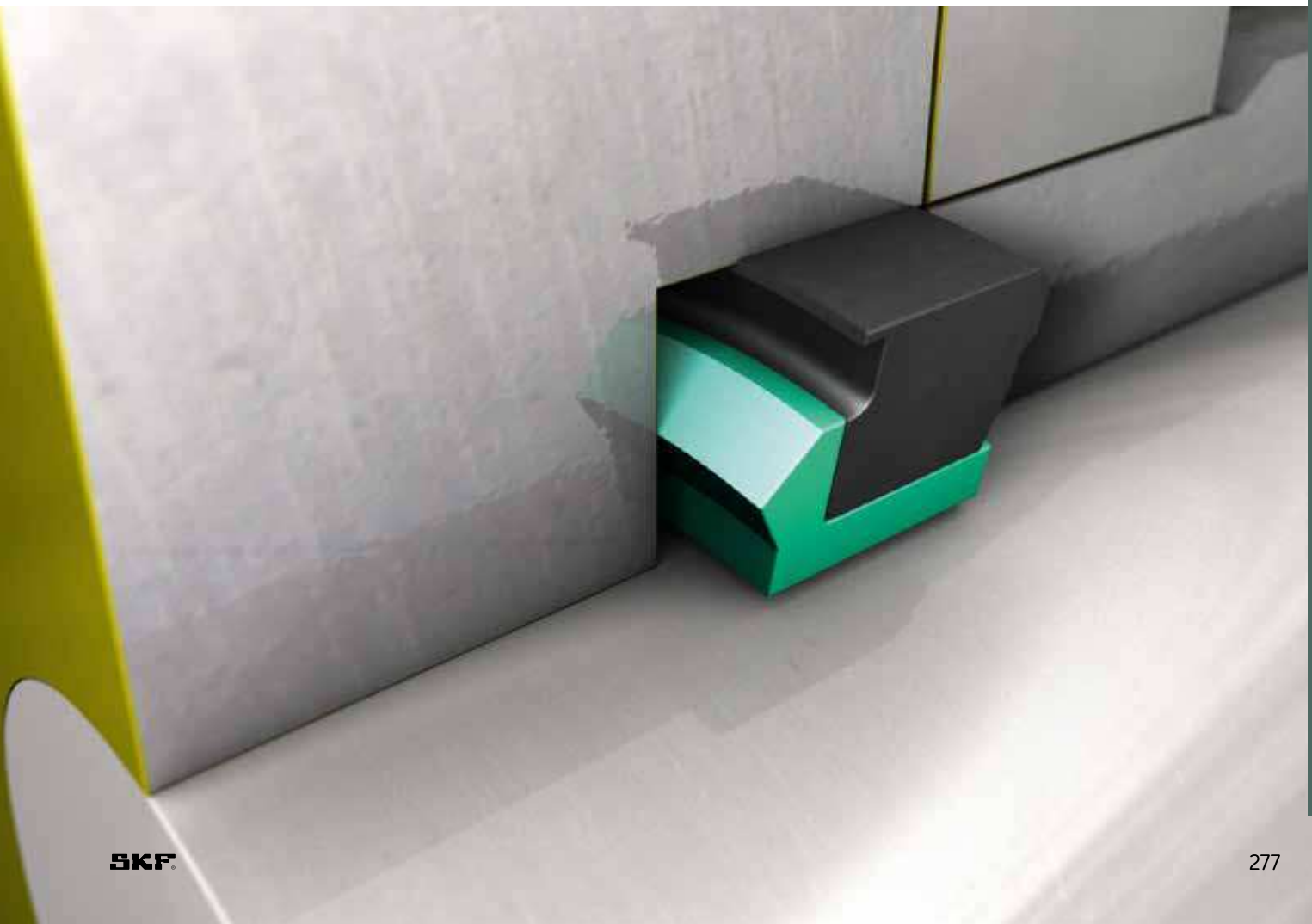

Track pin seals

General

The SKF track pin seals, SKF Trackstar, are specifically designed for oil lubricated track chains in off-highway applications. The seals are installed on the pin that connects a pair of links in the chain (→ **fig. 1**).

Features and benefits

The basic SKF Trackstar seal TP design features a polyurethane sealing ring and a nitrile rubber energizer (→ **fig. 2**). The sealing ring retains the oil between the pin and the bushing and excludes contaminants. The energizer provides the static sealing ability. Ribs on the seal inside diameter enable oil to pass providing the necessary lubrication.

For heavy-duty applciations the SKF Trackstar TPM design is available. This version with a metal ring as reinforcement provides additiona rigidity for severe operating conditions (→ **fig. 3**).

The perfect combination of these 3 parts results in a longer seal life resulting in a longer track life and consequently reduced maintenance cost. The sealing element is a special fibre reinforced and high wear resistance polyurethane material. The rubber energizer compound is developed by SKF to give optimal load to the polyurethane sealing ring enabling the static sealing function as well as protecting the system from external contamination via the passive sealing surface.

Furthermore, the seal design ensures that the seals do not rotate during operation, thus prolonging life time.

Both SKF Trackstar designs are installed on a spacer ring provided by the undercarriage manufacturer. The function of the spacer ring is to ensure that the required space for the seal exists when squeezed between the link and the bushing. The spacer is designed with oil galleys that enable oil to pass for optimal lubrication of the main sealing lip. Another feature to mention is the easy and safe mounting, since we have engineered an integrated mounting lip feature in the rubber, which also make it suitable for robotized mounting.

SKF Trackstar seals provide several important benefits including:

- Extended service life of the undercarriage
- Reduced internal bushing and pin wear
- Easy installation
- Interchangeability with the most commonly used sealed and lubricated track pin seals

Fig. 1

SKF Trackstar seal installation

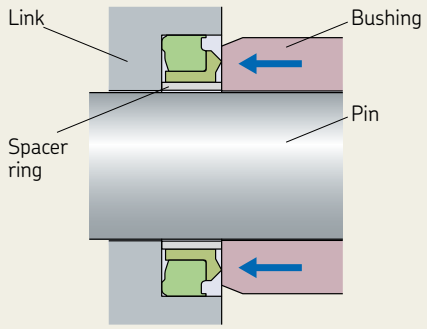

Fig. 2

SKF Trackstar seal design TP

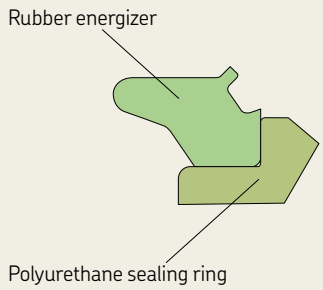

Fig. 3

SKF Trackstar seal design TPM

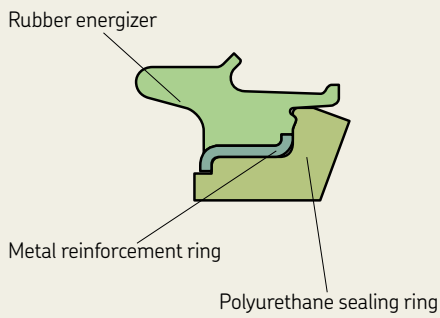

d_1 **33,22–80,72** mm

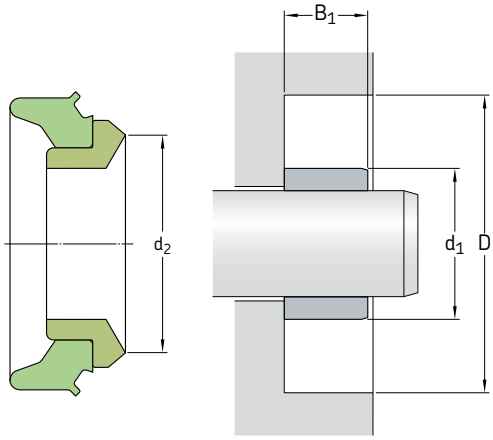

Dimensions Spacer ring outside diameter d_1 max.	Bore diameter, nominal D		Operating width B_1	Lip diameter d_2 max.		**Designation**
mm/*in*						–
33,22 *1.308*	47,88 *1.885*	± 0,25 *± 0.010*	8,38 *0.330*	± 0,25 *± 0.010*	40,01 *1.575*	**33.2×47.3×11.8 TP**
36,47 *1.436*	51,99 *2.047*	± 0,25 *± 0.010*	8,31 *0.327*	± 0,25 *± 0.010*	44,45 *1.750*	**36.5×51.4×11.7 TP**
38,05 *1.498*	55,04 *2.167*	± 0,25 *± 0.010*	9,60 *0.378*	± 0,25 *± 0.010*	46,99 *1.850*	**38.1×54.4×12.8 TP**
41,86 *1.648*	59,77 *2.353*	± 0,25 *± 0.010*	9,25 *0.364*	± 0,25 *± 0.010*	50,04 *1.970*	**42.0×59.1×12.8 TP**
42,52 *1.674*	59,79 *2.354*	± 0,03 *± 0.001*	10,69 *0.421*	± 0,25 *± 0.010*	51,05 *2.010*	**43.1×59.4×14.3 TPM**
44,60 *1.756*	63,04 *2.482*	± 0,25 *± 0.010*	10,69 *0.421*	± 0,25 *± 0.010*	53,70 *2.114*	**44.7×62.7×14.2 TP**
46,20 *1.819*	64,64 *2.545*	± 0,15 *± 0.006*	10,80 *0.425*	± 0,25 *± 0.010*	56,41 *2.221*	**46.1×64.1×14.1 TP**
45,69 *1.799*	62,99 *2.480*	± 0,03 *± 0.001*	10,69 *0.421*	± 0,25 *± 0.010*	54,71 *2.154*	**46.3×62.3×14.3 TPM**
50,29 *1.980*	67,59 *2.661*	± 0,25 *± 0.010*	10,80 *0.425*	± 0,25 *± 0.010*	58,42 *2.300*	**50.3×67.0×14.7 TP**
52,60 *2.071*	70,79 *2.787*	± 0,25 *± 0.010*	10,80 *0.425*	± 0,25 *± 0.010*	61,34 *2.415*	**52.7×70.5×14.2 TP**
52,43 *2.064*	70,10 *2.760*	± 0,03 *± 0.001*	10,80 *0.425*	± 0,25 *± 0.010*	61,11 *2.406*	**53.0×69.3×14.2 TPM**
54,99 *2.165*	72,75 *2.864*	± 0,25 *± 0.010*	10,80 *0.425*	± 0,25 *± 0.010*	64,19 *2.527*	**54.9×72.4×14.8 TP**
58,19 *2.291*	75,54 *2.974*	± 0,25 *± 0.010*	10,67 *0.420*	± 0,25 *± 0.010*	67,03 *2.639*	**58.1×75.0×14.7 TP**
58,90 *2.319*	77,65 *3.057*	± 0,25 *± 0.010*	11,10 *0.437*	± 0,25 *± 0.010*	67,59 *2.661*	**58.8×77.1×15.2 TP**

Dimensions Spacer ring outside diameter d_1 max.	Bore diameter, nominal D		Operating width B_1	Lip diameter d_2 max.		**Designation**
mm/*in*						–
61,09 *2.405*	82,55 *3.250*	± 0,13 *± 0.005*	11,10 *0.437*	± 0,25 *± 0.010*	70,00 *2.756*	**61.1×82.0×16.0 TP**
63,14 *2.486*	83,74 *3.297*	± 0,25 *± 0.010*	15,49 *0.610*	± 0,25 *± 0.010*	73,66 *2.900*	**63.2×83.1×19.3 TP**
63,60 *2.504*	83,49 *3.287*	± 0,25 *± 0.010*	11,13 *0.438*	± 0,25 *± 0.010*	74,22 *2.922*	**63.6×82.5×15.0 TP**
67,21 *2.646*	87,25 *3.435*	± 0,25 *± 0.010*	11,13 *0.438*	± 0,25 *± 0.010*	77,14 *3.037*	**67.1×86.7×15.4 TP**
76,71 *3.020*	99,80 *3.929*	± 0,13 *± 0.005*	11,10 *0.437*	± 0,25 *± 0.010*	89,08 *3.507*	**76.7×99.3×15.1 TP**
80,72 *3.178*	106,20 *4.181*	± 0,13 *± 0.005*	11,10 *0.437*	± 0,25 *± 0.010*	92,53 *3.643*	**80.8×105.8×15.9 TP**

C.2 Metal face seals

PROOFED SOLUTION FOR OFF-ROAD AND TRACKED VEHICLES

Metal face seals

› High resistance to wear, corrosion and chemicals

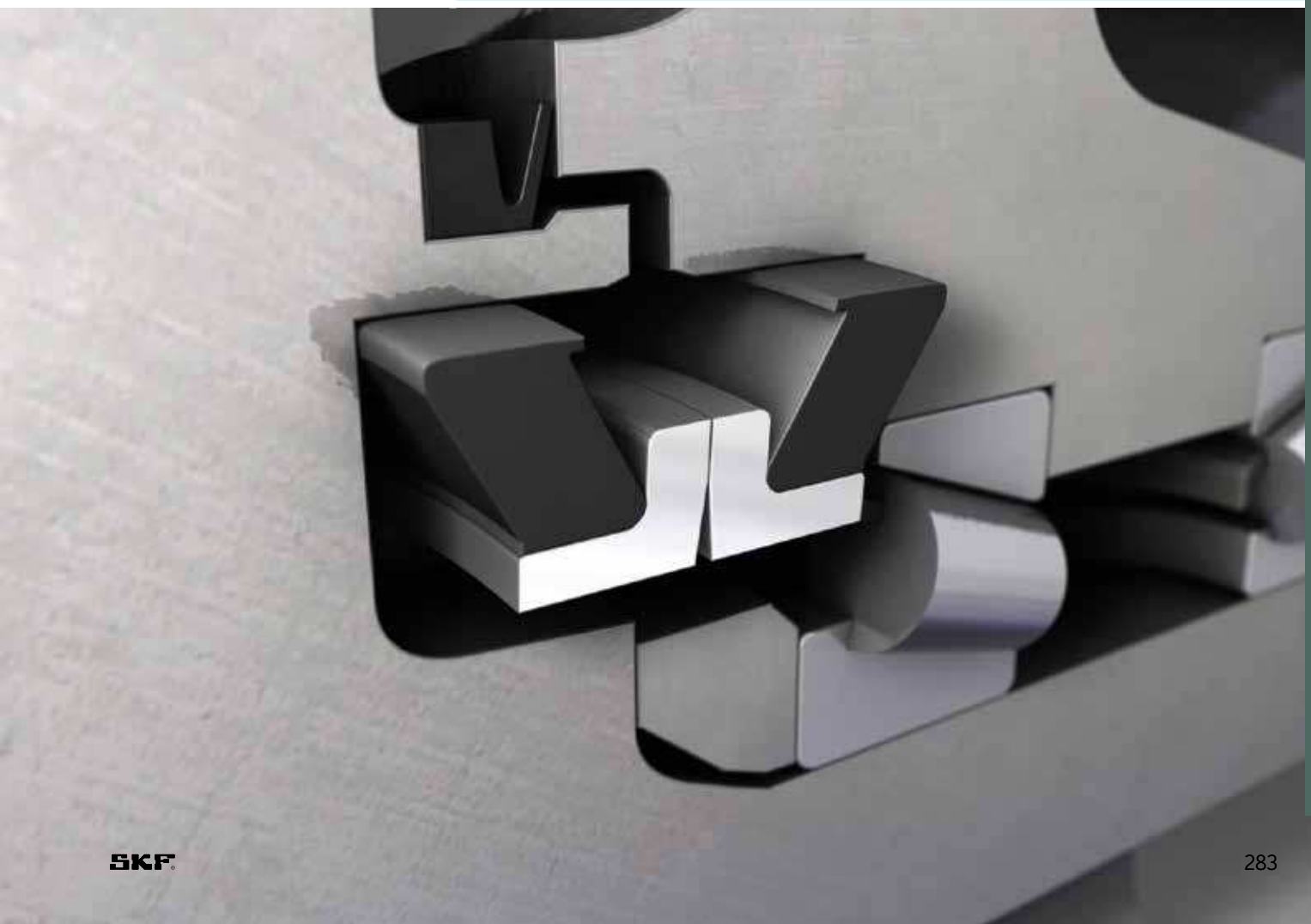

Metal face seals

General

SKF metal face seals type HDDF (→ **fig. 1**) are designed for use under severe service conditions at relatively low circumferential speeds. They offer reliable protection against solid and liquid contaminants as well as leak-proof retention of lubricants. The seals were originally developed for off-road and tracked vehicles, but have been found to be equally suitable for a range of other applications where effective protection is required against sand, soil, mud, water etc. (→ **fig. 2**). These applications include:

- All types of mixers
- Sand treatment equipment
- Conveyors and other construction equipment
- Agricultural machinery
- Washing equipment
- Grinding mills and other pulverizing equipment
- Ore dressing equipment
- Mining equipment

Design features

HDDF seals consist of two identical metal sealing rings and two similar Belleville washers (cup springs) made of nitrile or fluoro rubber compounds, specifically developed for these seals (→ **fig. 3** on **page 287**). The sealing rings are made of wear- and corrosion-resistant cast alloy and have finely finished sliding and sealing surfaces.

The Belleville washers of nitrile or fluoro rubber provide the necessary uniform face loading and effective sealing at the bore and outside diameters. The outside diameter of the washers adapts to the form of the bore in which they are installed. It is crucial that the bore diameter and bore depth are in accordance with the dimensions listed in the product table on **pages 288** to **291**. Adequate tolerances between the seal assembly and its mating component are crucial to ensure a proper sealing performance.

Lubricant requirements

A lubricant should be applied on the dynamic sealing surfaces of a metal face seal to prevent scoring and cover at least 30% of the sealing surface to properly lubricate and cool the sealing rings. The lubricant can be either a detergent like SAE 10W-40 or a mineral based oil ranging from 10 WT to 90 WT, depending on the ambient temperature. It should be noted that some oils contain additives that make them incompatible with elastomers, which can cause degradation of the Belleville washers, especially when exposed to elevated temperatures.

Although mineral oils are always the recommended lubricant, a grease lubricant can also be used in some slowly rotating or oscillating applications, where the seal face surface speed does not exceed 0,5 m/s (*100 ft/min*). At higher speeds, an oil lubricant is required, not only to provide lubrication to the sealing faces, but also to cool the sealing rings.

Fig. 1

HDDF seal

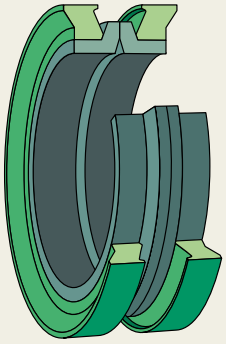

Fig. 2

HDDF application

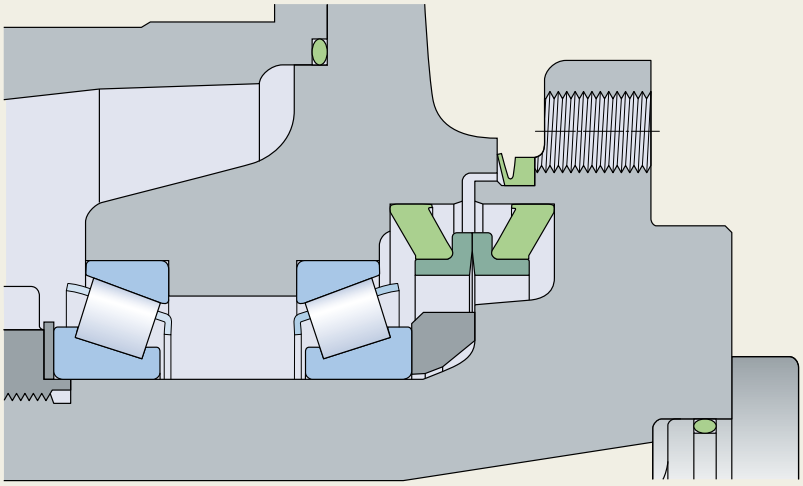

Permissible operating conditions

Depending on their design, metal face seals can withstand different amounts of internal pressure. It should, however, generally be maintained below 0,25 MPa (*35 psi*). Other recommendations regarding operating conditions for the metal face seals, like temperature and speed, are provided in **table 1**. The chemical resistance of the nitrile and fluoro rubber in general is dealt with in the section *Chemical resistance* on **page 37**.

Contaminants

Metal face seals are often used in heavily contaminated environments, where mud packing in the cavity between the housing, sealing rings and Belleville washers can occur. Eventually, the mud packing can cause the Belleville washers to be pushed out of position, resulting in improper face loads or mud being pumped past the Belleville washers.

Contaminants can also cause abrasion to the Belleville washers, which in turn causes deterioration of the elastomer. To minimize the risk of seal failure due to this deterioriation, it is critical to select a proper Belleville washer material for the application in question.

Installing HDDF seals

General
Careful handling and installation of a metal face seal is crucial to avoid cutting or tearing of the elastomeric Belleville washers or breaking the metal sealing rings, both which can cause premature seal failure and immediate leakage. It is also vital to keep the sealing faces free of contaminants like dirt or lint. Always carefully observe installation instructions provided on **page 287**.

Housing and seal preparation
All housing components contacting the Belleville washers must be free of contaminants (oil, grease, dust, lint particles etc.) when installing the seal. SKF recommends using a non-petroleum based solvent and a clean, lint-free wipe to clean these components prior to installation.

All seal parts must be handled with care to avoid damage or scoring.

Table 1

Permissible operating conditions

Operating condition	Recommended value	
Temperature, max.		
Continuous operation		
Nitrile rubber (NBR)	–25 to +100 °C	*(–15 to +210 °F)*
Fluoro rubber (FKM)	–10 to +190 °C	*(15 to 375 °F)*
Circumferential speed, max.		
Continuous operation	1,8 m/s	*(350 ft/min)*
Brief periods	3,8 m/s	*(750 ft/min)*
Pressure, max.		
Continuous operation	0,25 MPa	*(35 psi)*
Brief periods	0,35 MPa	*(50 psi)*

Installation procedure

1 Install the Belleville washers seated against the inside shoulder of the metal sealing rings (→ **fig. 4a**).
2 Carefully push each seal half (Belleville washer and metal sealing ring) into the housing until it is fully seated. Check that the seal is not cocked and that the washers are seated evenly at the bottom of the housing bore. Improper seal installation can result in uneven face loads around the circumference of the seal faces, causing scoring or the sealing rings to separate and allow oil to leak.
3 Clean both metal sealing ring faces with a lint-free wipe and apply a thin film of oil. Ensure that no oil is applied to any surface but the sealing ring faces (→ **fig. 4b**).
4 Check that both housings are concentric and in correct alignment. The Belleville washers must not unseat from the bottom of the housing.
5 Carefully bring the two housings together, avoiding high impact that can scratch or break the seal components.
6 Finally, hold one half of the assembly stationary while rotating the other half at least ten complete revolutions.

NOTE

This procedure enables the installer to check that the housing and the Belleville washers are aligned. If the seal assembly wobbles, it is necessary to disassemble it and make sure that the Belleville washers are properly seated in the housing.

Fig. 3

Design features

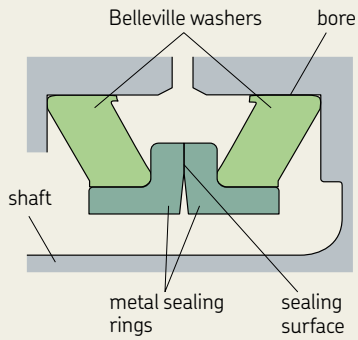

Fig. 4

Installation procedure

a

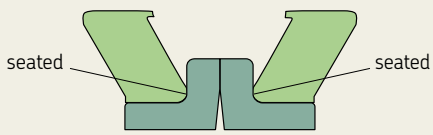

b

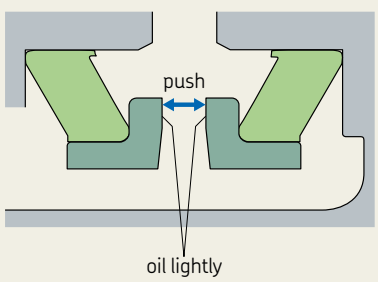

d_1 **1.688–8.688** in

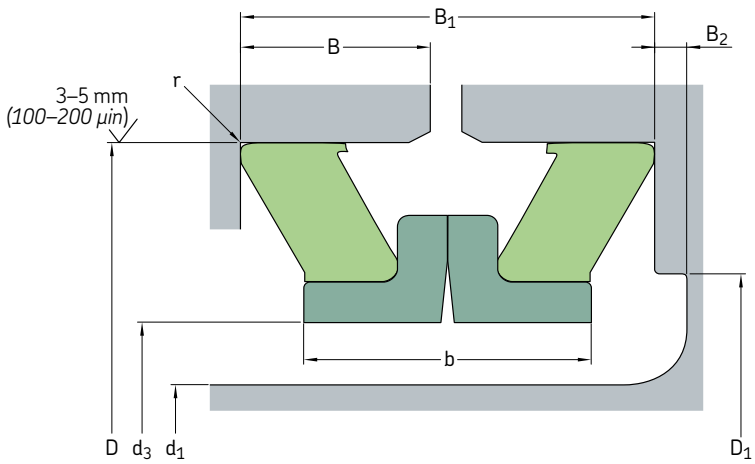

Designation	Lip material	Inch dimensions									
		Shaft diameter d_1	Bore diameter D	Operating width B_1	Seal inside diameter d_3 min.	Bore depth B	Recommended shoulder diameter D_1 max.	min.	Undercut B_2 min.	Sealing ring width b max.	Radius r max.
d_1 max.											
–	–	in									
16904	R	**1.688**	2.760 ±0.002	0.974 ±0.038	1.760	0.453	2.282	-	-	0.846	0.037
18259	R	**1.812**	3.003 ±0.002	0.892 ±0.031	1.910	0.416	2.475	-	-	0.790	0.042
21215	R	**2.125**	3.250 ±0.002	0.900 ±0.033	2.215	0.418	2.759	-	-	0.812	0.045
25096	R	**2.500**	3.762 ±0.002	0.907 ±0.033	2.580	0.422	3.188	-	-	0.840	0.042
27536	R	**2.750**	4.030 ±0.002	0.918 ±0.035	2.830	0.426	3.480	-	-	0.810	0.042
30651	R	**3.063**	4.500 ±0.002	1.016 ±0.035	3.170	0.475	3.833	-	-	0.912	0.042
35076	R	**3.500**	4.953 ±0.002	1.096 ±0.043	3.620	0.511	4.296	-	-	0.962	0.035
38740	R	**3.875**	5.312 ±0.003	1.102 ±0.024	4.040	0.524	4.750	-	-	1.002	0.042
38751	R	**3.875**	5.562 ±0.003	1.267 ±0.050	4.040	0.594	4.791	-	-	1.110	0.051
43135	R	**4.312**	5.823 ±0.003	1.102 ±0.024	4.420	0.524	5.125	-	-	1.002	0.042
43150	R	**4.312**	6.000 ±0.003	1.320 ±0.040	4.420	0.625	5.173	-	-	1.090	0.051
46975	R	**4.688**	6.400 ±0.003	1.525 ±0.050	4.795	0.722	5.583	-	-	1.254	0.047
50655	R	**5.062**	6.750 ±0.003	1.280 ±0.040	5.170	0.605	5.975	-	-	1.150	0.057
54000	R	**5.400**	6.990 ±0.003	1.310 ±0.030	5.625	0.625	6.625	-	-	1.182	0.057
56170	R	**5.625**	7.250 ±0.003	1.366 ±0.031	5.825	0.650	6.486	6.174	0.032	1.300	0.057
58775	R	**5.875**	7.641 ±0.003	1.510 ±0.031	6.000	0.724	6.868	6.548	0.056	1.490	0.073
63796	R	**6.375**	8.120 ±0.003	1.265 ±0.040	6.570	0.598	7.555	7.505	0.125	1.350	0.042
67560	R	**6.750**	8.620 ±0.004	1.375 ±0.030	6.920	0.656	7.750	-	-	1.260	0.042
74310	R	**7.438**	9.400 ±0.004	1.656 ±0.040	7.540	0.793	8.431	-	-	1.344	0.073
78020	R	**7.800**	10.000 ±0.004	1.750 ±0.050	7.940	0.835	8.910	-	-	1.500	0.058
82540	R	**8.250**	10.062 ±0.004	1.560 ±0.040	8.358	0.745	9.280	9.220	0.071	1.562	0.058
86850	R	**8.688**	10.911 ±0.005	1.924 ±0.030	8.790	0.932	9.754	-	-	1.642	0.058

Designation	Lip material	Inch dimensions Shaft diameter	Bore diameter	Operating width	Seal inside diameter	Bore depth	Recommended shoulder diameter		Undercut	Sealing ring width	Radius
d_1 max.		d_1	D	B_1	d_3 min.	B	D_1 max.	min.	B_2 min.	b max.	r max.
–	–	mm									
16904	R	**42,88**	70,10 ±0,06	24,74 ±0,97	44,70	11,51	57,96	-	-	21,49	0,94
18259	R	**46,03**	76,28 ±0,06	22,66 ±0,79	48,51	10,57	62,87	-	-	20,07	1,07
21215	R	**53,98**	82,55 ±0,06	22,86 ±0,84	56,26	10,62	70,08	-	-	20,62	1,14
25096	R	**63,50**	95,56 ±0,06	23,04 ±0,84	65,53	10,72	80,98	-	-	21,34	1,07
27536	R	**69,85**	102,36 ±0,06	23,32 ±0,89	71,88	10,82	88,39	-	-	20,57	1,07
30651	R	**77,80**	114,30 ±0,06	25,81 ±0,89	80,52	12,07	97,36	-	-	23,16	1,07
35076	R	**88,90**	125,81 ±0,06	27,84 ±1,09	91,95	12,98	109,12	-	-	24,43	0,89
38740	R	**98,43**	134,92 ±0,08	27,99 ±0,61	102,62	13,31	120,65	-	-	25,45	1,07
38751	R	**98,43**	141,27 ±0,08	32,18 ±1,27	102,62	15,09	121,69	-	-	28,19	1,30
43135	R	**109,52**	147,90 ±0,08	27,99 ±0,61	112,27	13,31	130,18	-	-	25,45	1,07
43150	R	**109,52**	152,40 ±0,08	33,53 ±1,02	112,27	15,88	131,39	-	-	27,69	1,30
46975	R	**119,08**	162,56 ±0,08	38,74 ±1,27	121,79	18,34	141,81	-	-	31,85	1,19
50655	R	**128,57**	171,45 ±0,08	32,51 ±1,02	131,32	15,37	151,77	-	-	29,21	1,45
54000	R	**137,16**	177,55 ±0,08	33,27 ±0,76	142,88	15,88	168,28	-	-	30,02	1,45
56170	R	**142,88**	184,15 ±0,08	34,70 ±0,79	147,96	16,51	164,74	156,82	0,81	33,02	1,45
58775	R	**149,23**	194,08 ±0,08	38,35 ±0,79	152,40	18,39	174,45	166,32	1,42	37,85	1,85
63796	R	**161,93**	206,25 ±0,08	32,13 ±1,02	166,88	15,19	191,90	190,63	3,18	34,29	1,07
67560	R	**171,45**	218,95 ±0,10	34,93 ±0,76	175,77	16,66	196,85	-	-	32,00	1,07
74310	R	**188,93**	238,76 ±0,10	42,06 ±1,02	191,52	20,14	214,15	-	-	34,14	1,85
78020	R	**198,12**	254,00 ±0,10	44,45 ±1,27	201,68	21,21	226,31	-	-	38,10	1,47
82540	R	**209,55**	255,57 ±0,10	39,62 ±1,02	212,29	18,92	235,71	234,19	1,80	39,67	1,47
86850	R	**220,68**	277,14 ±0,13	48,87 ±0,76	223,27	23,67	247,75	-	-	41,71	1,47

d_1 **9.312–29.000** in

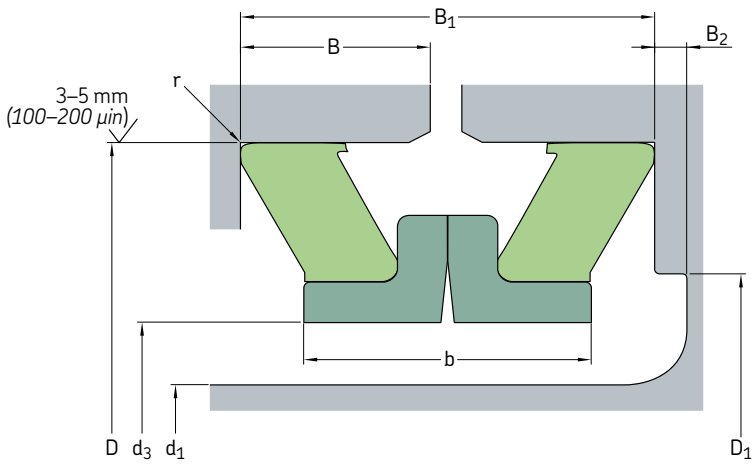

Designation d_1 max.	Lip material	Inch dimensions Shaft diameter d_1	Bore diameter D	Operating width B_1	Seal inside diameter d_3 min.	Bore depth B	Recommended shoulder diameter D_1 max.	min.	Undercut B_2 min.	Sealing ring width b max.	Radius r max.
–	–	in									
93115	R	**9.312**	11.000 ±0.005	1.437 ±0.032	9.410	0.687	10.360	10.260	0.090	1.510	0.050
93125	R	**9.312**	11.625 ±0.005	1.754 ±0.050	9.410	0.837	10.750	-	-	1.510	0.089
95620	R	**9.562**	11.859 ±0.005	1.949 ±0.069	9.660	0.925	10.703	-	-	1.700	0.074
108710	R	**10.875**	12.969 ±0.005	1.540 ±0.050	11.060	0.730	12.100	12.000	0.143	1.670	0.043
116500	R	**11.625**	13.250 ±0.005	1.290 ±0.030	11.780	0.615	12.780	-	-	1.210	0.045
124020	R	**12.400**	14.375 ±0.005	1.656 ±0.050	12.500	0.788	13.530	13.470	0.060	1.610	0.057
137570	R	**13.750**	15.817 ±0.005	1.875 ±0.032	13.910	0.906	14.985	-	-	1.670	0.089
806715	R	**14.750**	16.695 ±0.005	1.875 ±0.032	14.950	0.906	15.863	-	-	1.670	0.062
807115	V	**14.750**	16.695 ±0.005	1.875 ±0.032	14.950	0.906	15.863	-	-	1.670	0.062
171025	R	**17.125**	19.240 ±0.006	1.531 ±0.053	17.280	0.724	18.400	18.300	0.140	1.659	0.043
191022	R	**19.125**	21.500 ±0.006	1.640 ±0.042	19.250	0.784	20.950	20.850	0.175	1.832	0.057
238020	R	**23.875**	26.875 ±0.006	2.125 ±0.040	24.280	1.018	25.550	-	-	1.851	0.089
807199	V	**23.875**	26.875 ±0.006	2.125 ±0.040	24.280	1.018	25.550	-	-	1.851	0.089
807149	V	**29.000**	32.000 ±0.006	2.125 ±0.040	29.512	1.028	30.672	-	-	1.851	0.089

Designation	**Lip mat-erial**	**Inch dimensions** Shaft diameter d_1	Bore diameter D	Operating width B_1	Seal inside diameter d_3 min.	Bore depth B	Recommended shoulder diameter D_1 max.	min.	Under-cut B_2 min.	Sealing ring width b max.	Radius r max.
d_1 max.											
–	–	mm									
93115	R	**232,52**	279,40 ±0,13	36,50 ±0,81	239,01	17,45	263,14	260,60	2,29	38,35	1,27
93125	R	**236,52**	295,28 ±0,13	44,55 ±1,27	239,01	21,26	273,05	-	-	38,35	2,26
95620	R	**242,87**	301,22 ±0,13	49,50 ±1,75	245,36	23,50	271,86	-	-	43,18	1,88
108710	R	**276,23**	329,41 ±0,13	39,12 ±1,27	280,92	18,54	307,34	304,80	3,63	42,42	1,09
116500	R	**295,28**	336,55 ±0,13	32,77 ±0,76	299,21	15,62	324,61	-	-	30,73	1,14
124020	R	**314,96**	365,13 ±0,13	42,06 ±1,27	317,50	20,02	343,66	342,14	1,52	40,89	1,45
137570	R	**349,25**	401,75 ±0,13	47,63 ±0,81	353,31	23,01	380,62	-	-	42,42	2,26
806715	R	**374,65**	424,05 ±0,13	47,63 ±0,81	379,73	23,01	402,92	-	-	42,42	1,58
807115	V	**374,65**	424,05 ±0,13	47,63 ±0,81	379,73	23,01	402,92	-	-	42,42	1,57
171025	R	**434,98**	488,70 ±0,15	38,89 ±1,35	438,91	18,39	467,36	464,82	3,56	42,14	1,09
191022	R	**485,78**	546,10 ±0,15	41,66 ±1,07	488,95	19,91	532,13	529,59	4,45	46,53	1,45
238020	R	**606,43**	682,63 ±0,15	53,98 ±1,02	616,71	25,86	648,97	-	-	47,02	2,26
807199	V	**606,43**	682,63 ±0,15	53,98 ±1,02	616,71	25,86	648,97	-	-	47,02	2,26
807149	V	**736,60**	812,80 ±0,15	53,98 ±1,02	749,60	26,11	779,07	-	-	47,02	2,26

C.3 V-ring seals

ADMISSIBLE
WORLDWIDE

V-ring seals

- Cost-effective
- Versatile

V-ring seals

General

V-ring seals (or V-rings) are unique all-rubber seals for rotating shafts and are used in an extremely wide range of applications. The V-ring can be used alone to protect a wide assortment of bearing types from contaminants. They are also often used as secondary seals to protect primary seals in highly contaminated environments.

V-rings are installed on shafts and their thin, tapered lip seals against a counterface perpendicular to the shaft (→ **fig. 1a**). V-rings have an interference fit on the shaft, rotate with it and act as flingers (→ **fig. 1b**). Angular misalignment of the shaft relative to the counterface can be tolerated (→ **fig. 1c**). V-rings provide reliable sealing even if the shaft is out-of-round or rotates eccentrically (→ **fig. 1d**). The amount by which the shaft can be displaced axially is governed by the permissible displacement of the V-ring relative to its counterface.

V-rings are made entirely of elastomers without fabric or metal reinforcement and are therefore easy to install. They can be stretched and, depending on size, pushed over other components like flanges, pulleys or even housings. This is a very valuable feature, especially when replacing a seal.

Features

A V-ring consists of a seal body, a flexible, conical-shaped sealing lip and an integral, resilient "hinge" (→ **fig. 2**). It is stretched and installed directly on the shaft, where it is held in place by the inherent tension of the seal body. It rotates with the shaft and seals axially against a stationary counterface.

The counterface can be the end face of a bearing, a washer, stamping, bearing housing, or even the metal case of a radial shaft seal.

The flexible sealing lip applies contact pressure against the counterface that is relatively low but sufficient enough to maintain the sealing function. The light contact pressure even enables the seal to run dry in some low-speed applications resulting in insignificant torque drag or heat build-up. The contact pressure varies with the fitted width.

The flexible lip and hinge provide adequate sealing even in applications with considerable end play and shaft misalignment.

As a result of centrifugal force, the contact pressure of the lip decreases with increasing shaft speed. This means that friction losses and heat are kept to a minimum, resulting in improved wear resistance and extended service life.

Fig. 1

Installed V-ring seals

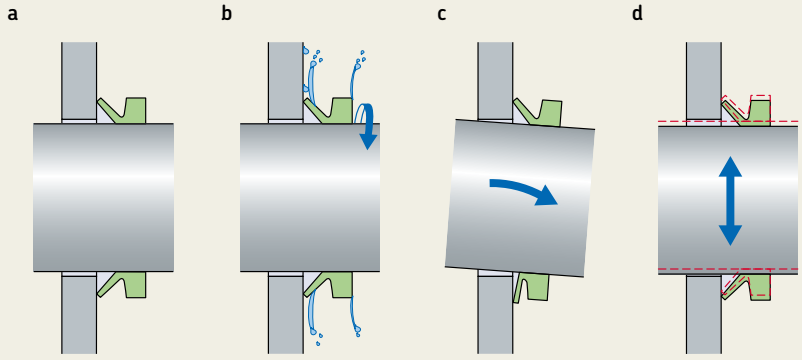

Materials

V-rings are normally made of nitrile rubber that features good chemical resistance, resistance to wear and can be used in applications with temperatures ranging from –40 to +100 °C (*–40 to +210 °F*). For applications with higher temperatures or where aggressive media are present, V-rings made of fluoro rubber can be supplied. The permissible operating conditions for V-rings made of nitrile or fluoro rubber are listed in **table 2** on **page 299**. In the product table under the heading Lip code, the letters R and V are used to identify nitrile rubber and fluoro rubber respectively.

⚠ WARNING

At temperatures above 300 °C (*570 °F*), all fluoro rubber compounds give off dangerous fumes.

For additional information, refer to **page 32**.

Fig. 2

V-ring design

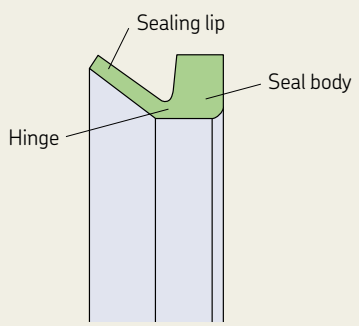

Standard designs

SKF offers five standard V-ring designs:

- VA / VR1, the most common type of V-ring, has a standard cross section and straight back sideface. VA / VR1 is typically used to protect bearing arrangements in gearboxes, electric motors and drives.
- VS / VR2, that has a standard low cross section, tapered back face and wide body, providing a firm hold on the shaft. VS / VR2 is commonly used in agricultural and automotive applications.
- VL / VR3, designed with a very compact axial cross section. VL / VR3 is commonly used in confined spaces to enhance labyrinth seals.
- VE / VR4, designed as secondary seals for heavy-duty applications where the primary seal has to be protected against water and / or solid contaminants. The design has the largest cross section of any V-ring designs and also permits the largest axial displacements. VE / VR4 is available in the diameter range 300 to 2 010 mm (*11.811 to 79.134 in*).
- VRME / VR6, a heavy-duty, large diameter V-ring for applications with large axial displacements. VRME / VR6 can be located axially and radially on the shaft using a standard band clamp. VRME / VR6 is primarily designed to protect high-speed bearing arrangements in rolling mills, paper-making and other large machine applications. VRME / VR6 is available on a made-to-order basis.

V-rings from SKF are available for the shaft diameter ranges listed in **table 1**. If the shaft diameter lies in the appropriate range for two V-rings, the larger V-ring, refering to the Seal fitted with, should always be chosen (**→ fig. 9** on **page 302**). In addition, special sizes and designs, including split versions, can be made to order. Contact your SKF sales representative for sizes outside the standard range.

Main V-ring functions

V-rings are suitable for both grease and oil lubricated applications. For sealing grease lubricated bearing arrangements and protecting against contaminants, the V-ring should be arranged outside the housing cover or housing wall. Dust, water spray and other contaminants can be excluded in this position (**→ fig. 3**). The V-ring can also act as a grease valve, where used grease or excess new grease can escape between the counterface and the sealing lip (**→ fig. 4**). The installation of two opposing V-rings can be used in applications where lubricant retention and contaminant exclusion are of equal importance (**→ fig. 5**).

If V-rings are used to retain oil, they should always be located axially on the shaft on the lubricant side (**→ fig. 6**).

V-rings should not be submerged in the application medium.

Table 1

Standard V-ring designs and size ranges

Design, globally outside North America Design, North America	VA VR1		VS VR2		VL VR3		VE VR4		VRME VR6	
–	mm	*in*	mm	*in*	mm	*in*	mm	*in*	mm	*in*
min.	2,7	*0.106*	4,5	*0.177*	105	*4.134*	300	*11.811*	300	*11.811*
max.	2 020	*79.257*	210	*8.268*	2 025	*79.724*	2 010	*79.134*	1 995	*78.543*

Fig. 3

V-ring used as an excluder

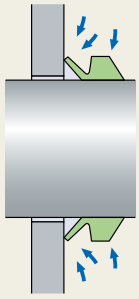

Fig. 4

V-ring used as a grease valve

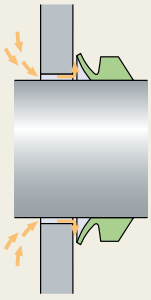

Fig. 5

Two opposing V-rings

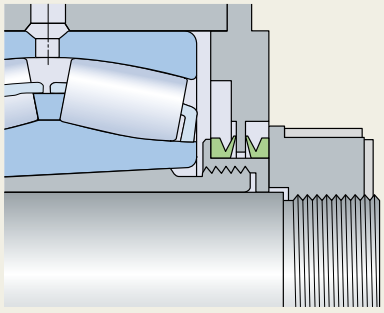

Fig. 6

V-ring located axially

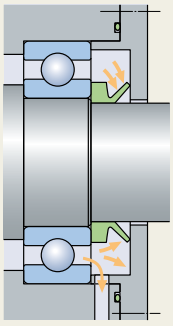

Other V-ring functions

V-rings can also be used as secondary seals (→ **fig. 7**), for example where it is necessary to protect the sealing lip and counterface of the primary seal against contaminants or corrosion . V-rings can also be used to enhance the efficiency of labyrinth seals (→ **fig. 8**).

Fig. 7

V-ring used as a secondary seal

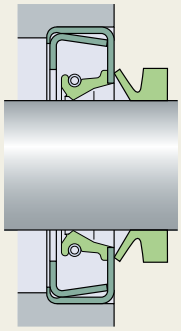

Fig. 8

V-rings in a labyrinth seal

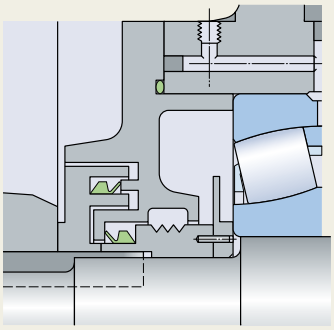

Sliding velocities

V-rings can operate under the conditions listed in table 2. In the speed range 15 to 20 m/s (*2 900 to 3 900 ft/min*), the sealing lip lifts from the counterface and the V-ring only acts as a gap-type seal.

Table 2

Permissible operating conditions

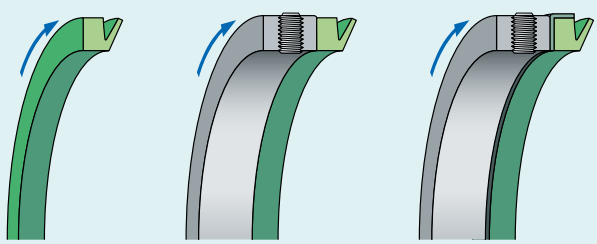

1
normal

2
located axially[1)]

3
axial and radial support[1)]

Operating conditions	**Guideline values for V-rings of** nitrile rubber		fluoro rubber	
Temperature	–40 to +100 °C	*(–40 to +210 °F)*	–20 to +150 °C	*(–4 to +300 °F)*
Circumferential speed				
normal (1)	up to 8 m/s	*(1 575 ft/min)*	up to 6,5 m/s	*(1 280 ft/min)*
located axially (2)	8 to 12 m/s	*(1 575 to 2 360 ft/min)*	6,5 to 10 m/s	*(1 280 to 1 970 ft/min)*
axial and radial support (3)	> 12 m/s	*(2 360 ft/min)*	> 10 m/s	*(1 970 ft/min)*
Pressure acting on seal				
static sealing or very low speed operation	up to 0,03 MPa	*(4.35 psi)*	up to 0,03 MPa	*(4.35 psi)*

1) Support ring by customer

Coaxiality and runout

The total tolerance for the deviation from coaxiality and runout should not exceed the guideline values provided in **table 3**.

Table 3

Coaxiality and runout tolerances

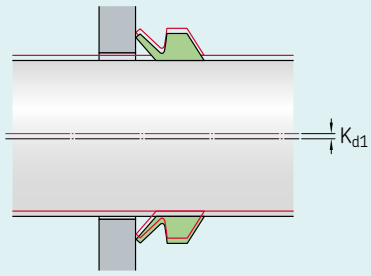

Shaft diameter nominal				**Total tolerance** for coaxiality deviation and runout	
d_1 over	incl.	over	incl.	Kd_1 max.	
mm		inc.		mm	*in*
V-rings, VA / VR1 and VS / VR2 designs					
	9,5		*0.374*	0,4	*0.016*
9,5	**19,5**	*0.374*	*0.768*	0,6	*0.024*
19,5	**38**	*0.768*	*1.496*	0,9	*0.034*
38	**68**	*1.496*	*2.677*	1,1	*0.043*
68	**105**	*2.677*	*4.134*	1,4	*0.055*
105	**155**	*4.134*	*6.102*	1,6	*0.063*
155	**210**	*6.102*	*8.628*	1,9	*0.075*
210	**2 020**	*8.628*	*79.527*	3,6	*0.142*
V-rings, VL / VR3 designs					
135	**630**	*5.315*	*24.803*	1,5	*0.059*
V-rings, VE / VR4 designs					
450	**2 010**	*17.716*	*79.134*	6	*0.236*

Misalignment

V-rings can tolerate misalignment between the shaft and housing, i.e. deviations from the perpendicularity between the shaft and counterface of the housing. Guideline values for the maximum permissible angular misalignment are provided in **diagram 1**. These values apply to the V-ring designs VA / VR1 and VS / VR2, provided they are supported axially on the shaft.

The permissible misalignment values for the very compact VL / VR3 design are appreciably lower than those for the VA / VR1 and VS / VR2 designs.

In applications where V-rings are not supported axially on the shaft, the maximum value in the diagram should be reduced.

Counterface

A fine-turned counterface is adequate for V-rings. The appropriate surface roughness values vary depending on the circumferential speed (**→ table 4** on **page 302**). SKF recommends buffing all turned surfaces with an emery cloth to remove any sharp peaks arising from the turning operation. The surface finish should be measured at approximately 90 degrees to the path of the groove to obtain a true reading of the surface.

Counterface treatment

In the presence of grease, oil or dry lubricants, no special counterface treatment is required. Mild steel counterfaces that are exposed to water or other corrosives should be protected, for example by zinc- or chromium-plating or treated with an anti-corrosive spray.

Additional counterface information

Aluminium surfaces should be free of scratch marks. Surface hardness should be > 100 HB in abrasive applications. Die cast aluminium can be used in the as-cast condition.

Steel and cast iron surfaces should be free of lead and sharp tool marks. Cold rolled steel stampings can be used without machining.

Plastic counterface materials are generally not acceptable due to poor heat dissipation.

Stainless steel should not be used in dry-running applications unless the speed is below 1 m/s (*200 ft/min*).

Diagram 1

Maximum permissible misalignment for V-rings of the VA / VR1 and VS / VR2 designs

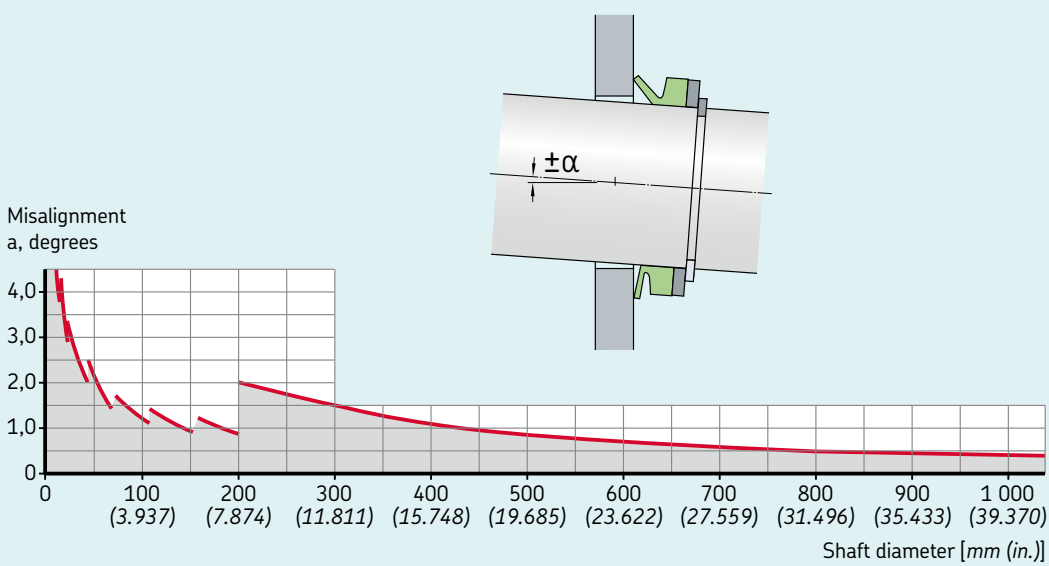

Product table sorting order

When searching for a suitable V-ring for a given shaft diameter, e.g. 930 mm, first identify the possible shaft diameter ranges (d_1). In this case, there are three possible ranges (→ **fig. 9a**). Then look for the appropriate dimensions D_1, D and B_1 that are listed in ascending order (→ **fig. 9b**). Please note that this sorting order concept results in that the shaft diameter ranges do not always come in ascending order, e.g. here 925–975 mm is listed before 920–965 mm.

Table 4

Recommended counterface surface finish

Circumferential speed		Surface finish	
m/s	*ft/min*	R_a µm	*R_a µin*
> 10	*> 1 969*	0,4–0,8	*16–32*
5–10	*984–1 969*	0,8–1,6	*32–64*
1–5	*199–984*	1,6–2,0	*64–80*
< 1	*< 199*	2,0–2,5	*80–100*

The surface finish must not be lower than R_a 0,05 µm (*2 µin*).

Fig. 9

V-ring seals – metric dimensions, globally valid outside North American market

Dimensions Shaft diameter range d_1 over	incl.	Seal inside diameter, free state d	Seal seat width b_1	Nominal seal width b	Nominal seal height c	Clearance D_1 max.	Counterface D min.	Seal fitted width B_1	**Lip code**	**Designation**
mm									–	–
310	**315**	304 304	32,5 32,5	65 65	30 21	$d_1 + 24$ $d_1 + 24$	$d_1 + 115$ $d_1 + 115$	50 ± 12 50 ± 12	R R	**310 VE R** **310 VRME R**
315	**320**	309 309	32,5 32,5	65 65	30 21	$d_1 + 24$ $d_1 + 24$	$d_1 + 115$ $d_1 + 115$	50 ± 12 50 ± 12	R R	**315 VE R** **315 VRME R**
320	**325**	314 314	32,5 32,5	65 65	30 21	$d_1 + 24$ $d_1 + 24$	$d_1 + 115$ $d_1 + 115$	50 ± 12 50 ± 12	R R	**320 VE R** **320 VRME R**
325	**330**	319 319	32,5 32,5	65 65	30 21	$d_1 + 24$ $d_1 + 24$	$d_1 + 115$ $d_1 + 115$	50 ± 12 50 ± 12	R R	**325 VE R** **325 VRME R**
330	**335**	323 323	32,5 32,5	65 65	30 21	$d_1 + 24$ $d_1 + 24$	$d_1 + 115$ $d_1 + 115$	50 ± 12 50 ± 12	R R	**330 VE R** **330 VRME R**
335	**365**	315 315 315 315	6 6 14,3 14,3	10,5 10,5 25 25	6,5 6,5 15 15	$d_1 + 5$ $d_1 + 5$ $d_1 + 10$ $d_1 + 10$	$d_1 + 20$ $d_1 + 20$ $d_1 + 45$ $d_1 + 45$	8 ± 1,5 8 ± 1,5 20 ± 4 20 ± 4	R V R V	**350 VL R** **350 VL V** **350 VA R** **350 VA V**
335	**340**	328 328	32,5 [illegible]	65 [illegible]	30 [illegible]	$d_1 + 24$ [illegible]	$d_1 + 115$ [illegible]	[illegible]	[illegible]	[illegible]

a

b

C.3 Seals

Shaft requirements

Sharp edges, nicks and burrs on the shaft must be avoided to prevent damage to the V-ring during installation.

V-rings rotate with the shaft and only require a moderate surface roughness value. As a general guideline, the value should not exceed R_a 6,3 µm (*252 µin*). When sealing fluids or exposed to fine, solid contaminants, the V-ring requires a surface roughness value of maximum R_a 3,2 µm (*128 µin*).

A V-ring is stretched when installed and fits all shaft diameters within the ranges listed in the product tables.

Installing V-rings

V-rings are elastic and can be stretched and pushed over other components, which facilitates the installation (→ **fig. 10**). When several V-rings are to be installed, a simple tool (→ **fig. 11**) can be used to push the seals to their position at a predetermined distance from the counterface. V-rings can also be cut and rejoined in the field.

The general installation guidelines include the following:

- Clean the V-ring, counterface and shaft.
- Make sure that the shaft is dry and free from grease or oil, particularly when installing a V-ring without axial support.
- Lubricate the lip of the V-ring with a thin film of grease or silicone oil.
- In applications where friction must be reduced to a minimum, the counterface should be coated with a low-friction agent. Do not apply grease to the lip.
- Check that the V-ring is installed with a uniform stretch around the shaft.

Fig. 10

Installing a V-ring

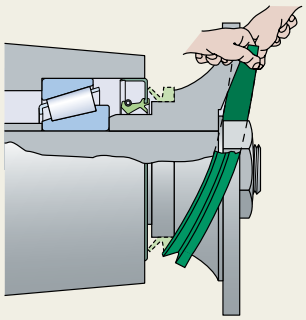

Fig. 11

Installation tool

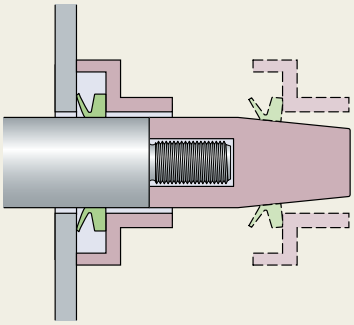

d_1 **2,7–58** mm

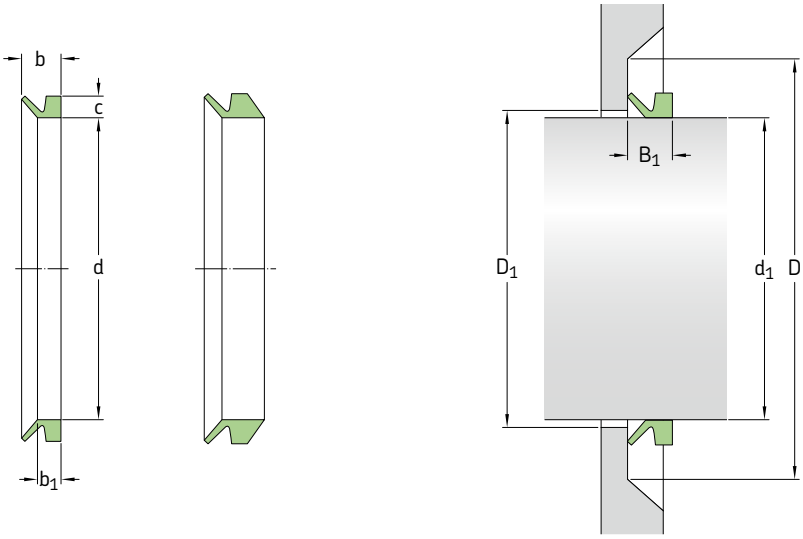

Dimensions Shaft diameter range d_1 over	incl.	Seal inside diameter, free state d	Seal seat width b_1	Nominal seal width b	Nominal seal height c	Clearance D_1 max.	Counterface D min.	Seal fitted width B_1	**Lip code**	**Designation**
mm									–	–
2,7	**3,5**	2,5	2,1	3	1,5	d_1+1	d_1+4	2,5 ± 0,3	R	**3 VA R**
		2,5	2,1	3	1,5	d_1+1	d_1+4	2,5 ± 0,3	V	**3 VA V**
3,5	**4,5**	3,2	2,4	3,7	2	d_1+1	d_1+6	3 ± 0,4	R	**4 VA R**
		3,2	2,4	3,7	2	d_1+1	d_1+6	3 ± 0,4	V	**4 VA V**
4,5	**5,5**	4	2,4	3,7	2	d_1+1	d_1+6	3 ± 0,4	R	**5 VA R**
		4	2,4	3,7	2	d_1+1	d_1+6	3 ± 0,4	V	**5 VA V**
		4	3,9	5,2	2	d_1+1	d_1+6	4,5 ± 0,4	R	**5 VS R**
		4	3,9	5,2	2	d_1+1	d_1+6	4,5 ± 0,4	V	**5 VS V**
5,5	**6,5**	5	2,4	3,7	2	d_1+1	d_1+6	3 ± 0,4	R	**6 VA R**
		5	2,4	3,7	2	d_1+1	d_1+6	3 ± 0,4	V	**6 VA V**
		5	3,9	5,2	2	d_1+1	d_1+6	4,5 ± 0,4	R	**6 VS R**
		5	3,9	5,2	2	d_1+1	d_1+6	4,5 ± 0,4	V	**6 VS V**
6,5	**8**	6	2,4	3,7	2	d_1+1	d_1+6	3 ± 0,4	R	**7 VA R**
		6	2,4	3,7	2	d_1+1	d_1+6	3 ± 0,4	V	**7 VA V**
		6	3,9	5,2	2	d_1+1	d_1+6	4,5 ± 0,4	R	**7 VS R**
		6	3,9	5,2	2	d_1+1	d_1+6	4,5 ± 0,4	V	**7 VS V**
8	**9,5**	7	2,4	3,7	2	d_1+1	d_1+6	3 ± 0,4	R	**8 VA R**
		7	2,4	3,7	2	d_1+1	d_1+6	3 ± 0,4	V	**8 VA V**
		7	3,9	5,2	2	d_1+1	d_1+6	4,5 ± 0,4	R	**8 VS R**
		7	3,9	5,2	2	d_1+1	d_1+6	4,5 ± 0,4	V	**8 VS V**
9,5	**11,5**	9	3,4	5,5	3	d_1+1	d_1+9	4,5 ± 0,6	R	**10 VA R**
		9	3,4	5,5	3	d_1+1	d_1+9	4,5 ± 0,6	V	**10 VA V**
		9	5,6	7,7	3	d_1+1	d_1+9	6,7 ± 0,6	R	**10 VS R**
		9	5,6	7,7	3	d_1+1	d_1+9	6,7 ± 0,6	V	**10 VS V**
11,5	**12,5**	10,5	3,4	5,5	3	d_1+1	d_1+9	4,5 ± 0,6	R	**12 VA R**
		10,5	3,4	5,5	3	d_1+1	d_1+9	4,5 ± 0,6	V	**12 VA V**
11,5	**13,5**	10,5	5,6	7,7	3	d_1+1	d_1+9	6,7 ± 0,6	R	**12 VS R**
		10,5	5,6	7,7	3	d_1+1	d_1+9	6,7 ± 0,6	V	**12 VS V**
		11,7	3,4	5,5	3	d_1+1	d_1+9	4,5 ± 0,6	R	**13 VA R**
		11,7	3,4	5,5	3	d_1+1	d_1+9	4,5 ± 0,6	V	**13 VA V**
13,5	**15,5**	12,5	3,4	5,5	3	d_1+1	d_1+9	4,5 ± 0,6	R	**14 VA R**
		12,5	3,4	5,5	3	d_1+1	d_1+9	4,5 ± 0,6	V	**14 VA V**
13,5	**15,5**	12,5	5,6	7,7	3	d_1+1	d_1+9	6,7 ± 0,6	R	**14 VS R**
		12,5	5,6	7,7	3	d_1+1	d_1+9	6,7 ± 0,6	V	**14 VS V**

Dimensions Shaft diameter range d_1 over	incl.	Seal inside diameter, free state d	Seal seat width b_1	Nominal seal width b	Nominal seal height c	Clearance D_1 max.	Counterface D min.	Seal fitted width B_1	Lip code	Designation
mm									–	–
15,5	**17**	14	3,4	5,5	3	d_1 + 1	d_1 + 9	4,5 ± 0,6	R	**16 VA R**
		14	3,4	5,5	3	d_1 + 1	d_1 + 9	4,5 ± 0,6	V	**16 VA V**
15,5	**17,5**	14	5,6	7,7	3	d_1 + 1	d_1 + 9	6,7 ± 0,6	R	**16 VS R**
		14	5,6	7,7	3	d_1 + 1	d_1 + 9	6,7 ± 0,6	V	**16 VS V**
17,5	**19**	16	3,4	5,5	3	d_1 + 1	d_1 + 9	4,5 ± 0,6	R	**18 VA R**
		16	3,4	5,5	3	d_1 + 1	d_1 + 9	4,5 ± 0,6	V	**18 VA V**
		16	5,6	7,7	3	d_1 + 1	d_1 + 9	6,7 ± 0,6	R	**18 VS R**
		16	5,6	7,7	3	d_1 + 1	d_1 + 9	6,7 ± 0,6	V	**18 VS V**
19	**21**	18	4,7	7,5	4	d_1 + 2	d_1 + 12	6 ± 0,8	R	**20 VA R**
		18	4,7	7,5	4	d_1 + 2	d_1 + 12	6 ± 0,8	V	**20 VA V**
		18	7,9	10,5	4	d_1 + 2	d_1 + 12	9 ± 0,8	R	**20 VS R**
		18	7,9	10,5	4	d_1 + 2	d_1 + 12	9 ± 0,8	V	**20 VS V**
21	**24**	20	4,7	7,5	4	d_1 + 2	d_1 + 12	6 ± 0,8	R	**22 VA R**
		20	4,7	7,5	4	d_1 + 2	d_1 + 12	6 ± 0,8	V	**22 VA V**
		20	7,9	10,5	4	d_1 + 2	d_1 + 12	9 ± 0,8	R	**22 VS R**
		20	7,9	10,5	4	d_1 + 2	d_1 + 12	9 ± 0,8	V	**22 VS V**
24	**27**	22	4,7	7,5	4	d_1 + 2	d_1 + 12	6 ± 0,8	R	**25 VA R**
		22	4,7	7,5	4	d_1 + 2	d_1 + 12	6 ± 0,8	V	**25 VA V**
		22	7,9	10,5	4	d_1 + 2	d_1 + 12	9 ± 0,8	R	**25 VS R**
		22	7,9	10,5	4	d_1 + 2	d_1 + 12	9 ± 0,8	V	**25 VS V**
27	**29**	25	4,7	7,5	4	d_1 + 2	d_1 + 12	6 ± 0,8	R	**28 VA R**
		25	4,7	7,5	4	d_1 + 2	d_1 + 12	6 ± 0,8	V	**28 VA V**
		25	7,9	10,5	4	d_1 + 2	d_1 + 12	9 ± 0,8	R	**28 VS R**
		25	7,9	10,5	4	d_1 + 2	d_1 + 12	9 ± 0,8	V	**28 VS V**
29	**31**	27	4,7	7,5	4	d_1 + 2	d_1 + 12	6 ± 0,8	R	**30 VA R**
		27	4,7	7,5	4	d_1 + 2	d_1 + 12	6 ± 0,8	V	**30 VA V**
		27	7,9	10,5	4	d_1 + 2	d_1 + 12	9 ± 0,8	R	**30 VS R**
		27	7,9	10,5	4	d_1 + 2	d_1 + 12	9 ± 0,8	V	**30 VS V**
31	**33**	29	4,7	7,5	4	d_1 + 2	d_1 + 12	6 ± 0,8	R	**32 VA R**
		29	4,7	7,5	4	d_1 + 2	d_1 + 12	6 ± 0,8	V	**32 VA V**
		29	7,9	10,5	4	d_1 + 2	d_1 + 12	9 ± 0,8	R	**32 VS R**
		29	7,9	10,5	4	d_1 + 2	d_1 + 12	9 ± 0,8	V	**32 VS V**
33	**36**	31	4,7	7,5	4	d_1 + 2	d_1 + 12	6 ± 0,8	R	**35 VA R**
		31	4,7	7,5	4	d_1 + 2	d_1 + 12	6 ± 0,8	V	**35 VA V**
		31	7,9	10,5	4	d_1 + 2	d_1 + 12	9 ± 0,8	R	**35 VS R**
		31	7,9	10,5	4	d_1 + 2	d_1 + 12	9 ± 0,8	V	**35 VS V**
36	**38**	34	4,7	7,5	4	d_1 + 2	d_1 + 12	6 ± 0,8	R	**38 VA R**
		34	4,7	7,5	4	d_1 + 2	d_1 + 12	6 ± 0,8	V	**38 VA V**
		34	7,9	10,5	4	d_1 + 2	d_1 + 12	9 ± 0,8	R	**38 VS R**
		34	7,9	10,5	4	d_1 + 2	d_1 + 12	9 ± 0,8	V	**38 VS V**
38	**43**	36	5,5	9	5	d_1 + 2	d_1 + 15	7 ± 1	R	**40 VA R**
		36	5,5	9	5	d_1 + 2	d_1 + 15	7 ± 1	V	**40 VA V**
		36	9,5	13	5	d_1 + 2	d_1 + 15	11 ± 1	R	**40 VS R**
		36	9,5	13	5	d_1 + 2	d_1 + 15	11 ± 1	V	**40 VS V**
43	**48**	40	5,5	9	5	d_1 + 2	d_1 + 15	7 ± 1	R	**45 VA R**
		40	5,5	9	5	d_1 + 2	d_1 + 15	7 ± 1	V	**45 VA V**
		40	9,5	13	5	d_1 + 2	d_1 + 15	11 ± 1	R	**45 VS R**
		40	9,5	13	5	d_1 + 2	d_1 + 15	11 ± 1	V	**45 VS V**
48	**53**	45	5,5	9	5	d_1 + 2	d_1 + 15	7 ± 1	R	**50 VA R**
		45	5,5	9	5	d_1 + 2	d_1 + 15	7 ± 1	V	**50 VA V**
		45	9,5	13	5	d_1 + 2	d_1 + 15	11 ± 1	R	**50 VS R**
		45	9,5	13	5	d_1 + 2	d_1 + 15	11 ± 1	V	**50 VS V**
53	**58**	49	5,5	9	5	d_1 + 2	d_1 + 15	7 ± 1	R	**55 VA R**
		49	5,5	9	5	d_1 + 2	d_1 + 15	7 ± 1	V	**55 VA V**

d_1 **53–195** mm

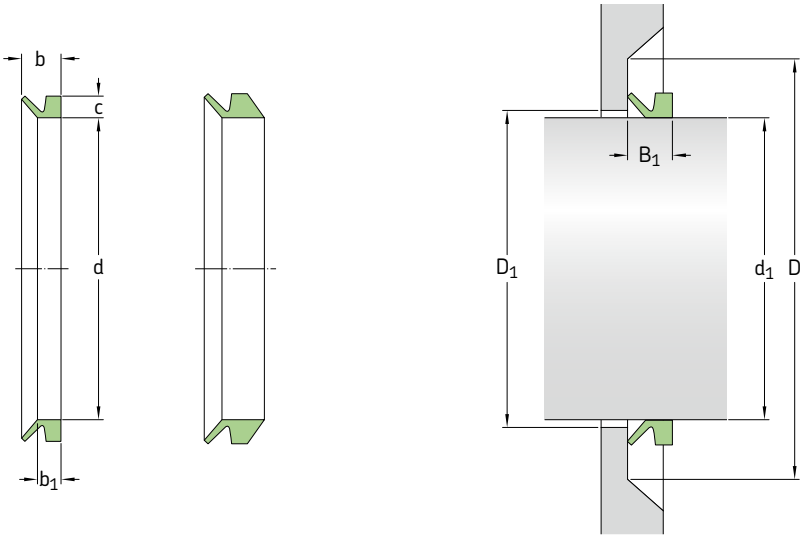

Dimensions Shaft diameter range d_1 over	incl.	Seal inside diameter, free state d	Seal seat width b_1	Nominal seal width b	Nominal seal height c	Clearance D_1 max.	Counterface D min.	Seal fitted width B_1	Lip code	Designation
mm									–	–
		49	9,5	13	5	d_1+2	d_1+15	11 ± 1	R	**55 VS R**
		49	9,5	13	5	d_1+2	d_1+15	11 ± 1	V	**55 VS V**
58	**63**	54	5,5	9	5	d_1+2	d_1+15	7 ± 1	R	**60 VA R**
		54	5,5	9	5	d_1+2	d_1+15	7 ± 1	V	**60 VA V**
		54	9,5	13	5	d_1+2	d_1+15	11 ± 1	R	**60 VS R**
		54	9,5	13	5	d_1+2	d_1+15	11 ± 1	V	**60 VS V**
63	**68**	58	5,5	9	5	d_1+2	d_1+15	7 ± 1	R	**65 VA R**
		58	5,5	9	5	d_1+2	d_1+15	7 ± 1	V	**65 VA V**
		58	9,5	13	5	d_1+2	d_1+15	11 ± 1	R	**65 VS R**
		58	9,5	13	5	d_1+2	d_1+15	11 ± 1	V	**65 VS V**
68	**73**	63	6,8	11	6	d_1+3	d_1+18	9 ± 1,2	R	**70 VA R**
		63	6,8	11	6	d_1+3	d_1+18	9 ± 1,2	V	**70 VA V**
		63	11,3	15,5	6	d_1+3	d_1+18	13,5 ± 1,2	R	**70 VS R**
		63	11,3	15,5	6	d_1+3	d_1+18	13,5 ± 1,2	V	**70 VS V**
73	**78**	67	6,8	11	6	d_1+3	d_1+18	9 ± 1,2	R	**75 VA R**
		67	6,8	11	6	d_1+3	d_1+18	13,5 ± 1,2	R	**75 VS R**
		67	11,3	15,5	6	d_1+3	d_1+18	13,5 ± 1,2	V	**75 VS V**
78	**83**	72	6,8	11	6	d_1+3	d_1+18	9 ± 1,2	R	**80 VA R**
		72	6,8	11	6	d_1+3	d_1+18	9 ± 1,2	V	**80 VA V**
		72	11,3	15,5	6	d_1+3	d_1+18	13,5 ± 1,2	R	**80 VS R**
		72	11,3	15,5	6	d_1+3	d_1+18	13,5 ± 1,2	V	**80 VS V**
83	**88**	76	6,8	11	6	d_1+3	d_1+18	9 ± 1,2	R	**85 VA R**
		76	6,8	11	6	d_1+3	d_1+18	9 ± 1,2	V	**85 VA V**
		76	11,3	15,5	6	d_1+3	d_1+18	13,5 ± 1,2	R	**85 VS R**
		76	11,3	15,5	6	d_1+3	d_1+18	13,5 ± 1,2	V	**85 VS V**
88	**93**	81	6,8	11	6	d_1+3	d_1+18	9 ± 1,2	R	**90 VA R**
		81	6,8	11	6	d_1+3	d_1+18	9 ± 1,2	V	**90 VA V**
		81	11,3	15,5	6	d_1+3	d_1+18	13,5 ± 1,2	R	**90 VS R**
		81	11,3	15,5	6	d_1+3	d_1+18	13,5 ± 1,2	V	**90 VS V**
93	**98**	85	6,8	11	6	d_1+3	d_1+18	9 ± 1,2	R	**95 VA R**
		85	6,8	11	6	d_1+3	d_1+18	9 ± 1,2	V	**95 VA V**
		85	11,3	15,5	6	d_1+3	d_1+18	13,5 ± 1,2	R	**95 VS R**
		85	11,3	15,5	6	d_1+3	d_1+18	13,5 ± 1,2	V	**95 VS V**

Dimensions Shaft diameter range d_1 over	incl.	Seal inside diameter, free state d	Seal seat width b_1	Nominal seal width b	Nominal seal height c	Clearance D_1 max.	Counterface D min.	Seal fitted width B_1	Lip code	Designation
mm									–	–
98	**105**	90	6,8	11	6	$d_1 + 3$	$d_1 + 18$	9 ± 1,2	R	**100 VA R**
		90	6,8	11	6	$d_1 + 3$	$d_1 + 18$	9 ± 1,2	V	**100 VA V**
		90	11,3	15,5	6	$d_1 + 3$	$d_1 + 18$	13,5 ± 1,2	R	**100 VS R**
		90	11,3	15,5	6	$d_1 + 3$	$d_1 + 18$	13,5 ± 1,2	V	**100 VS V**
105	**115**	99	6	10,5	6,5	$d_1 + 5$	$d_1 + 20$	8 ± 1,5	R	**110 VL R**
		99	6	10,5	6,5	$d_1 + 5$	$d_1 + 20$	8 ± 1,5	V	**110 VL V**
		99	7,9	12,8	7	$d_1 + 4$	$d_1 + 21$	10,5 ± 1,5	R	**110 VA R**
		99	7,9	12,8	7	$d_1 + 4$	$d_1 + 21$	10,5 ± 1,5	V	**110 VA V**
		99	13,1	18	7	$d_1 + 4$	$d_1 + 21$	15,5 ± 1,5	R	**110 VS R**
		99	13,1	18	7	$d_1 + 4$	$d_1 + 21$	15,5 ± 1,5	V	**110 VS V**
115	**125**	108	6	10,5	6,5	$d_1 + 5$	$d_1 + 20$	8 ± 1,5	R	**120 VL R**
		108	6	10,5	6,5	$d_1 + 5$	$d_1 + 20$	8 ± 1,5	V	**120 VL V**
		108	7,9	12,8	7	$d_1 + 4$	$d_1 + 21$	10,5 ± 1,5	R	**120 VA R**
		108	7,9	12,8	7	$d_1 + 4$	$d_1 + 21$	10,5 ± 1,5	V	**120 VA V**
		108	13,1	18	7	$d_1 + 4$	$d_1 + 21$	15,5 ± 1,5	R	**120 VS R**
		108	13,1	18	7	$d_1 + 4$	$d_1 + 21$	15,5 ± 1,5	V	**120 VS V**
125	**135**	117	6	10,5	6,5	$d_1 + 5$	$d_1 + 20$	8 ± 1,5	R	**130 VL R**
		117	6	10,5	6,5	$d_1 + 5$	$d_1 + 20$	8 ± 1,5	V	**130 VL V**
		117	7,9	12,8	7	$d_1 + 4$	$d_1 + 21$	10,5 ± 1,5	R	**130 VA R**
		117	7,9	12,8	7	$d_1 + 4$	$d_1 + 21$	10,5 ± 1,5	V	**130 VA V**
		117	13,1	18	7	$d_1 + 4$	$d_1 + 21$	15,5 ± 1,5	R	**130 VS R**
		117	13,1	18	7	$d_1 + 4$	$d_1 + 21$	15,5 ± 1,5	V	**130 VS V**
135	**145**	126	6	10,5	6,5	$d_1 + 5$	$d_1 + 20$	8 ± 1,5	R	**140 VL R**
		126	6	10,5	6,5	$d_1 + 5$	$d_1 + 20$	8 ± 1,5	V	**140 VL V**
		126	7,9	12,8	7	$d_1 + 4$	$d_1 + 21$	10,5 ± 1,5	R	**140 VA R**
		126	7,9	12,8	7	$d_1 + 4$	$d_1 + 21$	10,5 ± 1,5	V	**140 VA V**
		126	13,1	18	7	$d_1 + 4$	$d_1 + 21$	15,5 ± 1,5	R	**140 VS R**
		126	13,1	18	7	$d_1 + 4$	$d_1 + 21$	15,5 ± 1,5	V	**140 VS V**
145	**155**	135	6	10,5	6,5	$d_1 + 5$	$d_1 + 20$	8 ± 1,5	R	**150 VL R**
		135	6	10,5	6,5	$d_1 + 5$	$d_1 + 20$	8 ± 1,5	V	**150 VL V**
		135	7,9	12,8	7	$d_1 + 4$	$d_1 + 21$	10,5 ± 1,5	R	**150 VA R**
		135	7,9	12,8	7	$d_1 + 4$	$d_1 + 21$	10,5 ± 1,5	V	**150 VA V**
		135	13,1	18	7	$d_1 + 4$	$d_1 + 21$	15,5 ± 1,5	R	**150 VS R**
		135	13,1	18	7	$d_1 + 4$	$d_1 + 21$	15,5 ± 1,5	V	**150 VS V**
155	**165**	144	6	10,5	6,5	$d_1 + 5$	$d_1 + 20$	8 ± 1,5	R	**160 VL R**
		144	6	10,5	6,5	$d_1 + 5$	$d_1 + 20$	8 ± 1,5	V	**160 VL V**
		144	9	14,5	8	$d_1 + 4$	$d_1 + 24$	12 ± 1,8	R	**160 VA R**
		144	9	14,5	8	$d_1 + 4$	$d_1 + 24$	12 ± 1,8	V	**160 VA V**
		144	15	20,5	8	$d_1 + 4$	$d_1 + 24$	18 ± 1,8	R	**160 VS R**
		144	15	20,5	8	$d_1 + 4$	$d_1 + 24$	18 ± 1,8	V	**160 VS V**
165	**175**	153	6	10,5	6,5	$d_1 + 5$	$d_1 + 20$	8 ± 1,5	R	**170 VL R**
		153	6	10,5	6,5	$d_1 + 5$	$d_1 + 20$	8 ± 1,5	V	**170 VL V**
		153	9	14,5	8	$d_1 + 4$	$d_1 + 24$	12 ± 1,8	R	**170 VA R**
		153	9	14,5	8	$d_1 + 4$	$d_1 + 24$	12 ± 1,8	V	**170 VA V**
		153	15	20,5	8	$d_1 + 4$	$d_1 + 24$	18 ± 1,8	R	**170 VS R**
		153	15	20,5	8	$d_1 + 4$	$d_1 + 24$	18 ± 1,8	V	**170 VS V**
175	**185**	162	6	10,5	6,5	$d_1 + 5$	$d_1 + 20$	8 ± 1,5	R	**180 VL R**
		162	6	10,5	6,5	$d_1 + 5$	$d_1 + 20$	8 ± 1,5	V	**180 VL V**
		162	9	14,5	8	$d_1 + 4$	$d_1 + 24$	12 ± 1,8	R	**180 VA R**
		162	9	14,5	8	$d_1 + 4$	$d_1 + 24$	12 ± 1,8	V	**180 VA V**
		162	15	20,5	8	$d_1 + 4$	$d_1 + 24$	18 ± 1,8	R	**180 VS R**
		162	15	20,5	8	$d_1 + 4$	$d_1 + 24$	18 ± 1,8	V	**180 VS V**
185	**195**	171	6	10,5	6,5	$d_1 + 5$	$d_1 + 20$	8 ± 1,5	R	**190 VL R**
		171	6	10,5	6,5	$d_1 + 5$	$d_1 + 20$	8 ± 1,5	V	**190 VL V**
		171	9	14,5	8	$d_1 + 4$	$d_1 + 24$	12 ± 1,8	R	**190 VA R**
		171	9	14,5	8	$d_1 + 4$	$d_1 + 24$	12 ± 1,8	V	**190 VA V**
		171	15	20,5	8	$d_1 + 4$	$d_1 + 24$	18 ± 1,8	R	**190 VS R**
		171	15	20,5	8	$d_1 + 4$	$d_1 + 24$	18 ± 1,8	V	**190 VS V**

d_1 **195–400** mm

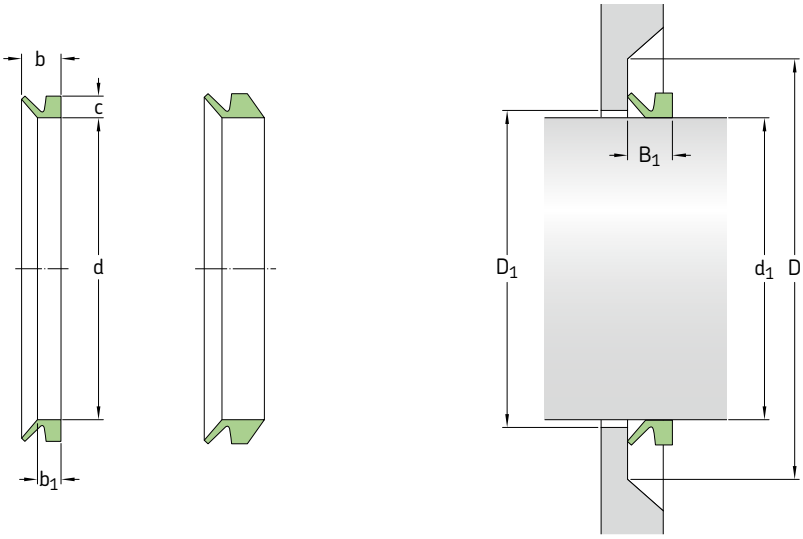

Dimensions Shaft diameter range d_1 over	incl.	Seal inside diameter, free state d	Seal seat width b_1	Nominal seal width b	Nominal seal height c	Clearance D_1 max.	Counterface D min.	Seal fitted width B_1	Lip code	Designation
mm									–	–
195	**210**	182	6	10,5	6,5	$d_1 + 5$	$d_1 + 20$	8 ± 1,5	R	**200 VL R**
		182	6	10,5	6,5	$d_1 + 5$	$d_1 + 20$	8 ± 1,5	V	**200 VL V**
		180	9	14,5	8	$d_1 + 4$	$d_1 + 24$	12 ± 1,8	R	**199 VA R**
		180	9	14,5	8	$d_1 + 4$	$d_1 + 24$	12 ± 1,8	V	**199 VA V**
		180	15	20,5	8	$d_1 + 4$	$d_1 + 24$	18 ± 1,8	R	**199 VS R**
		180	15	20,5	8	$d_1 + 4$	$d_1 + 24$	18 ± 1,8	V	**199 VS V**
190	**210**	180	14,3	25	15	$d_1 + 10$	$d_1 + 45$	20 ± 4	R	**200 VA R**
		180	14,3	25	15	$d_1 + 10$	$d_1 + 45$	20 ± 4	V	**200 VA V**
210	**233**	198	6	10,5	6,5	$d_1 + 5$	$d_1 + 20$	8 ± 1,5	R	**220 VL R**
		198	6	10,5	6,5	$d_1 + 5$	$d_1 + 20$	8 ± 1,5	V	**220 VL V**
		198	14,3	25	15	$d_1 + 10$	$d_1 + 45$	20 ± 4	R	**220 VA R**
		198	14,3	25	15	$d_1 + 10$	$d_1 + 45$	20 ± 4	V	**220 VA V**
233	**260**	225	6	10,5	6,5	$d_1 + 5$	$d_1 + 20$	8 ± 1,5	R	**250 VL R**
		225	6	10,5	6,5	$d_1 + 5$	$d_1 + 20$	8 ± 1,5	V	**250 VL V**
235	**265**	225	14,3	25	15	$d_1 + 10$	$d_1 + 45$	20 ± 4	R	**250 VA R**
		225	14,3	25	15	$d_1 + 10$	$d_1 + 45$	20 ± 4	V	**250 VA V**
260	**285**	247	6	10,5	6,5	$d_1 + 5$	$d_1 + 20$	8 ± 1,5	R	**275 VL R**
		247	6	10,5	6,5	$d_1 + 5$	$d_1 + 20$	8 ± 1,5	V	**275 VL V**
265	**290**	247	14,3	25	15	$d_1 + 10$	$d_1 + 45$	20 ± 4	R	**275 VA R**
		247	14,3	25	15	$d_1 + 10$	$d_1 + 45$	20 ± 4	V	**275 VA V**
285	**310**	270	6	10,5	6,5	$d_1 + 5$	$d_1 + 20$	8 ± 1,5	R	**300 VL R**
		270	6	10,5	6,5	$d_1 + 5$	$d_1 + 20$	8 ± 1,5	V	**300 VL V**
290	**310**	270	14,3	25	15	$d_1 + 10$	$d_1 + 45$	20 ± 4	R	**300 VA R**
		270	14,3	25	15	$d_1 + 10$	$d_1 + 45$	20 ± 4	V	**300 VA V**
300	**305**	294	32,5	65	30	$d_1 + 24$	$d_1 + 115$	50 ± 12	R	**300 VE R**
		294	32,5	65	21	$d_1 + 24$	$d_1 + 115$	50 ± 12	R	**300 VRME R**
305	**310**	299	32,5	65	30	$d_1 + 24$	$d_1 + 115$	50 ± 12	R	**305 VE R**
		299	32,5	65	21	$d_1 + 24$	$d_1 + 115$	50 ± 12	R	**305 VRME R**
310	**335**	292	6	10,5	6,5	$d_1 + 5$	$d_1 + 20$	8 ± 1,5	R	**325 VL R**
		292	6	10,5	6,5	$d_1 + 5$	$d_1 + 20$	8 ± 1,5	V	**325 VL V**
310	**335**	292	14,3	25	15	$d_1 + 10$	$d_1 + 45$	20 ± 4	R	**325 VA R**
		292	14,3	25	15	$d_1 + 10$	$d_1 + 45$	20 ± 4	V	**325 VA V**

Dimensions Shaft diameter range d_1 over	incl.	Seal inside diameter, free state d	Seal seat width b_1	Nominal seal width b	Nominal seal height c	Clearance D_1 max.	Counterface D min.	Seal fitted width B_1	Lip code	Designation
mm									–	–
310	**315**	304	32,5	65	30	$d_1 + 24$	$d_1 + 115$	50 ± 12	R	**310 VE R**
		304	32,5	65	21	$d_1 + 24$	$d_1 + 115$	50 ± 12	R	**310 VRME R**
315	**320**	309	32,5	65	30	$d_1 + 24$	$d_1 + 115$	50 ± 12	R	**315 VE R**
		309	32,5	65	21	$d_1 + 24$	$d_1 + 115$	50 ± 12	R	**315 VRME R**
320	**325**	314	32,5	65	30	$d_1 + 24$	$d_1 + 115$	50 ± 12	R	**320 VE R**
		314	32,5	65	21	$d_1 + 24$	$d_1 + 115$	50 ± 12	R	**320 VRME R**
325	**330**	319	32,5	65	30	$d_1 + 24$	$d_1 + 115$	50 ± 12	R	**325 VE R**
		319	32,5	65	21	$d_1 + 24$	$d_1 + 115$	50 ± 12	R	**325 VRME R**
330	**335**	323	32,5	65	30	$d_1 + 24$	$d_1 + 115$	50 ± 12	R	**330 VE R**
		323	32,5	65	21	$d_1 + 24$	$d_1 + 115$	50 ± 12	R	**330 VRME R**
335	**365**	315	6	10,5	6,5	$d_1 + 5$	$d_1 + 20$	8 ± 1,5	R	**350 VL R**
		315	6	10,5	6,5	$d_1 + 5$	$d_1 + 20$	8 ± 1,5	V	**350 VL V**
		315	14,3	25	15	$d_1 + 10$	$d_1 + 45$	20 ± 4	R	**350 VA R**
		315	14,3	25	15	$d_1 + 10$	$d_1 + 45$	20 ± 4	V	**350 VA V**
335	**340**	328	32,5	65	30	$d_1 + 24$	$d_1 + 115$	50 ± 12	R	**335 VE R**
		328	32,5	65	21	$d_1 + 24$	$d_1 + 115$	50 ± 12	R	**335 VRME R**
340	**345**	333	32,5	65	30	$d_1 + 24$	$d_1 + 115$	50 ± 12	R	**340 VE R**
		328	32,5	65	21	$d_1 + 24$	$d_1 + 115$	50 ± 12	R	**340 VRME R**
345	**350**	338	32,5	65	30	$d_1 + 24$	$d_1 + 115$	50 ± 12	R	**345 VE R**
		338	32,5	65	21	$d_1 + 24$	$d_1 + 115$	50 ± 12	R	**345 VRME R**
350	**355**	343	32,5	65	30	$d_1 + 24$	$d_1 + 115$	50 ± 12	R	**350 VE R**
		343	32,5	65	21	$d_1 + 24$	$d_1 + 115$	50 ± 12	R	**350 VRME R**
355	**360**	347	32,5	65	30	$d_1 + 24$	$d_1 + 115$	50 ± 12	R	**355 VE R**
		347	32,5	65	21	$d_1 + 24$	$d_1 + 115$	50 ± 12	R	**355 VRME R**
360	**365**	352	32,5	65	30	$d_1 + 24$	$d_1 + 115$	50 ± 12	R	**360 VE R**
		357	32,5	65	21	$d_1 + 24$	$d_1 + 115$	50 ± 12	R	**360 VRME R**
365	**385**	337	6	10,5	6,5	$d_1 + 5$	$d_1 + 20$	8 ± 1,5	R	**375 VL R**
		337	6	10,5	6,5	$d_1 + 5$	$d_1 + 20$	8 ± 1,5	V	**375 VL V**
365	**390**	337	14,3	25	15	$d_1 + 10$	$d_1 + 45$	20 ± 4	R	**375 VA R**
		337	14,3	25	15	$d_1 + 10$	$d_1 + 45$	20 ± 4	V	**375 VA V**
365	**370**	357	32,5	65	30	$d_1 + 24$	$d_1 + 115$	50 ± 12	R	**365 VE R**
370	**375**	362	32,5	65	30	$d_1 + 24$	$d_1 + 115$	50 ± 12	R	**370 VE R**
		362	32,5	65	21	$d_1 + 24$	$d_1 + 115$	50 ± 12	R	**370 VRME R**
375	**380**	367	32,5	65	30	$d_1 + 24$	$d_1 + 115$	50 ± 12	R	**375 VE R**
		367	32,5	65	21	$d_1 + 24$	$d_1 + 115$	50 ± 12	R	**375 VRME R**
380	**385**	371	32,5	65	30	$d_1 + 24$	$d_1 + 115$	50 ± 12	R	**380 VE R**
		371	32,5	65	21	$d_1 + 24$	$d_1 + 115$	50 ± 12	R	**380 VRME R**
385	**410**	360	6	10,5	6,5	$d_1 + 5$	$d_1 + 20$	8 ± 1,5	R	**400 VL R**
		360	6	10,5	6,5	$d_1 + 5$	$d_1 + 20$	8 ± 1,5	V	**400 VL V**
390	**430**	360	14,3	25	15	$d_1 + 10$	$d_1 + 45$	20 ± 4	R	**400 VA R**
		360	14,3	25	15	$d_1 + 10$	$d_1 + 45$	20 ± 4	V	**400 VA V**
385	**390**	376	32,5	65	30	$d_1 + 24$	$d_1 + 115$	50 ± 12	R	**385 VE R**
		376	32,5	65	21	$d_1 + 24$	$d_1 + 115$	50 ± 12	R	**385 VRME R**
390	**395**	381	32,5	65	30	$d_1 + 24$	$d_1 + 115$	50 ± 12	R	**390 VE R**
		381	32,5	65	21	$d_1 + 24$	$d_1 + 115$	50 ± 12	R	**390 VRME R**
395	**400**	386	32,5	65	30	$d_1 + 24$	$d_1 + 115$	50 ± 12	R	**395 VE R**
		386	32,5	65	21	$d_1 + 24$	$d_1 + 115$	50 ± 12	R	**395 VRME R**

d_1 **400–550** mm

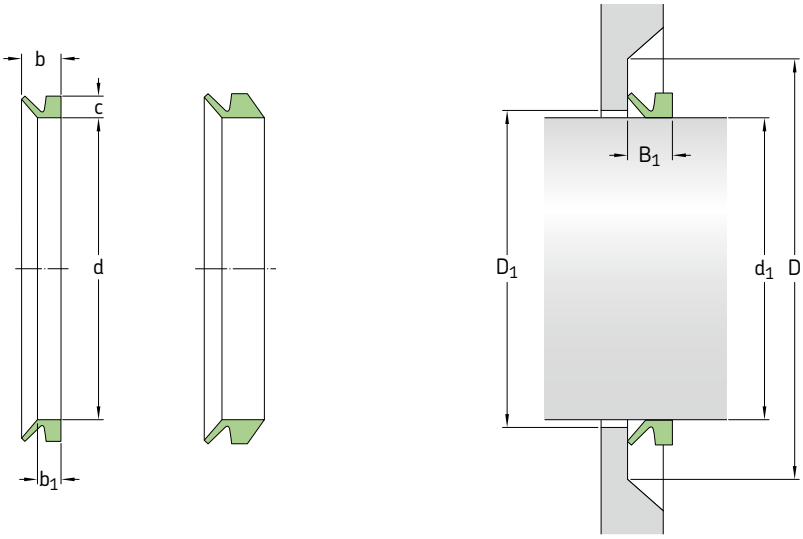

Dimensions Shaft diameter range d_1 over	incl.	Seal inside diameter, free state d	Seal seat width b_1	Nominal seal width b	Nominal seal height c	Clearance D_1 max.	Counterface D min.	Seal fitted width B_1	Lip code	Designation
mm									–	–
400	**405**	391	32,5	65	30	$d_1 + 24$	$d_1 + 115$	50 ± 12	R	**400 VE R**
		391	32,5	65	21	$d_1 + 24$	$d_1 + 115$	50 ± 12	R	**400 VRME R**
405	**410**	396	32,5	65	30	$d_1 + 24$	$d_1 + 115$	50 ± 12	R	**405 VE R**
		396	32,5	65	21	$d_1 + 24$	$d_1 + 115$	50 ± 12	R	**405 VRME R**
410	**415**	401	32,5	65	30	$d_1 + 24$	$d_1 + 115$	50 ± 12	R	**410 VE R**
		401	32,5	65	21	$d_1 + 24$	$d_1 + 115$	50 ± 12	R	**410 VRME R**
415	**420**	405	32,5	65	30	$d_1 + 24$	$d_1 + 115$	50 ± 12	R	**415 VE R**
		405	32,5	65	21	$d_1 + 24$	$d_1 + 115$	50 ± 12	R	**415 VRME R**
420	**425**	410	32,5	65	30	$d_1 + 24$	$d_1 + 115$	50 ± 12	R	**420 VE R**
		410	32,5	65	21	$d_1 + 24$	$d_1 + 115$	50 ± 12	R	**420 VRME R**
425	**430**	415	32,5	65	30	$d_1 + 24$	$d_1 + 115$	50 ± 12	R	**425 VE R**
		415	32,5	65	21	$d_1 + 24$	$d_1 + 115$	50 ± 12	R	**425 VRME R**
410	**440**	382	6	10,5	6,5	$d_1 + 5$	$d_1 + 20$	8 ± 1,5	R	**425 VL R**
		382	6	10,5	6,5	$d_1 + 5$	$d_1 + 20$	8 ± 1,5	V	**425 VL V**
440	**475**	405	6	10,5	6,5	$d_1 + 5$	$d_1 + 20$	8 ± 1,5	R	**450 VL R**
		405	6	10,5	6,5	$d_1 + 5$	$d_1 + 20$	8 ± 1,5	V	**450 VL V**
430	**480**	405	14,3	25	15	$d_1 + 10$	$d_1 + 45$	20 ± 4	R	**450 VA R**
		405	14,3	25	15	$d_1 + 10$	$d_1 + 45$	20 ± 4	V	**450 VA V**
430	**435**	420	32,5	65	30	$d_1 + 24$	$d_1 + 115$	50 ± 12	R	**430 VE R**
		420	32,5	65	21	$d_1 + 24$	$d_1 + 115$	50 ± 12	R	**430 VRME R**
435	**440**	425	32,5	65	30	$d_1 + 24$	$d_1 + 115$	50 ± 12	R	**435 VE R**
		425	32,5	65	21	$d_1 + 24$	$d_1 + 115$	50 ± 12	R	**435 VRME R**
440	**445**	429	32,5	65	30	$d_1 + 24$	$d_1 + 115$	50 ± 12	R	**440 VE R**
		429	32,5	65	21	$d_1 + 24$	$d_1 + 115$	50 ± 12	R	**440 VRME R**
445	**450**	434	32,5	65	30	$d_1 + 24$	$d_1 + 115$	50 ± 12	R	**445 VE R**
		434	32,5	65	21	$d_1 + 24$	$d_1 + 115$	50 ± 12	R	**445 VRME R**
450	**455**	439	32,5	65	30	$d_1 + 24$	$d_1 + 115$	50 ± 12	R	**450 VE R**
		439	32,5	65	21	$d_1 + 24$	$d_1 + 115$	50 ± 12	R	**450 VRME R**
455	**460**	444	32,5	65	30	$d_1 + 24$	$d_1 + 115$	50 ± 12	R	**455 VE R**
		444	32,5	65	21	$d_1 + 24$	$d_1 + 115$	50 ± 12	R	**455 VRME R**

Dimensions Shaft diameter range d_1 over	incl.	Seal inside diameter, free state d	Seal seat width b_1	Nominal seal width b	Nominal seal height c	Clearance D_1 max.	Counterface D min.	Seal fitted width B_1	Lip code	Designation
mm									–	–
460	**465**	448	32,5	65	30	$d_1 + 24$	$d_1 + 115$	50 ± 12	R	**460 VE R**
		448	32,5	65	21	$d_1 + 24$	$d_1 + 115$	50 ± 12	R	**460 VRME R**
465	**470**	453	32,5	65	30	$d_1 + 24$	$d_1 + 115$	50 ± 12	R	**465 VE R**
		453	32,5	65	21	$d_1 + 24$	$d_1 + 115$	50 ± 12	R	**465 VRME R**
470	**475**	458	32,5	65	30	$d_1 + 24$	$d_1 + 115$	50 ± 12	R	**470 VE R**
		458	32,5	65	21	$d_1 + 24$	$d_1 + 115$	50 ± 12	R	**470 VRME R**
475	**480**	463	32,5	65	30	$d_1 + 24$	$d_1 + 115$	50 ± 12	R	**475 VE R**
		463	32,5	65	21	$d_1 + 24$	$d_1 + 115$	50 ± 12	R	**475 VRME R**
475	**510**	450	6	10,5	6,5	$d_1 + 5$	$d_1 + 20$	8 ± 1,5	R	**500 VL R**
		450	6	10,5	6,5	$d_1 + 5$	$d_1 + 20$	8 ± 1,5	V	**500 VL V**
510	**540**	472	6	10,5	6,5	$d_1 + 5$	$d_1 + 20$	8 ± 1,5	R	**525 VL R**
		472	6	10,5	6,5	$d_1 + 5$	$d_1 + 20$	8 ± 1,5	V	**525 VL V**
480	**530**	450	14,3	25	15	$d_1 + 10$	$d_1 + 45$	20 ± 4	R	**500 VA R**
		450	14,3	25	15	$d_1 + 10$	$d_1 + 45$	20 ± 4	V	**500 VA V**
480	**485**	468	32,5	65	30	$d_1 + 24$	$d_1 + 115$	50 ± 12	R	**480 VE R**
		468	32,5	65	21	$d_1 + 24$	$d_1 + 115$	50 ± 12	R	**480 VRME R**
485	**490**	473	32,5	65	30	$d_1 + 24$	$d_1 + 115$	50 ± 12	R	**485 VE R**
		473	32,5	65	21	$d_1 + 24$	$d_1 + 115$	50 ± 12	R	**485 VRME R**
490	**495**	478	32,5	65	30	$d_1 + 24$	$d_1 + 115$	50 ± 12	R	**490 VE R**
		478	32,5	65	21	$d_1 + 24$	$d_1 + 115$	50 ± 12	R	**490 VRME R**
495	**500**	483	32,5	65	30	$d_1 + 24$	$d_1 + 115$	50 ± 12	R	**495 VE R**
		483	32,5	65	21	$d_1 + 24$	$d_1 + 115$	50 ± 12	R	**495 VRME R**
500	**505**	488	32,5	65	30	$d_1 + 24$	$d_1 + 115$	50 ± 12	R	**500 VE R**
		488	32,5	65	21	$d_1 + 24$	$d_1 + 115$	50 ± 12	R	**500 VRME R**
505	**510**	493	32,5	65	30	$d_1 + 24$	$d_1 + 115$	50 ± 12	R	**505 VE R**
		493	32,5	65	21	$d_1 + 24$	$d_1 + 115$	50 ± 12	R	**505 VRME R**
510	**515**	497	32,5	65	30	$d_1 + 24$	$d_1 + 115$	50 ± 12	R	**510 VE R**
		497	32,5	65	21	$d_1 + 24$	$d_1 + 115$	50 ± 12	R	**510 VRME R**
515	**520**	502	32,5	65	30	$d_1 + 24$	$d_1 + 115$	50 ± 12	R	**515 VE R**
		502	32,5	65	21	$d_1 + 24$	$d_1 + 115$	50 ± 12	R	**515 VRME R**
520	**525**	507	32,5	65	30	$d_1 + 24$	$d_1 + 115$	50 ± 12	R	**520 VE R**
		507	32,5	65	21	$d_1 + 24$	$d_1 + 115$	50 ± 12	R	**520 VRME R**
525	**530**	512	32,5	65	30	$d_1 + 24$	$d_1 + 115$	50 ± 12	R	**525 VE R**
		512	32,5	65	21	$d_1 + 24$	$d_1 + 115$	50 ± 12	R	**525 VRME R**
540	**575**	495	6	10,5	6,5	$d_1 + 5$	$d_1 + 20$	8 ± 1,5	R	**550 VL R**
		495	6	10,5	6,5	$d_1 + 5$	$d_1 + 20$	8 ± 1,5	V	**550 VL V**
530	**580**	495	14,3	25	15	$d_1 + 10$	$d_1 + 45$	20 ± 4	R	**550 VA R**
		495	14,3	25	15	$d_1 + 10$	$d_1 + 45$	20 ± 4	V	**550 VA V**
530	**535**	517	32,5	65	30	$d_1 + 24$	$d_1 + 115$	50 ± 12	R	**530 VE R**
		517	32,5	65	21	$d_1 + 24$	$d_1 + 115$	50 ± 12	R	**530 VRME R**
535	**540**	521	32,5	65	30	$d_1 + 24$	$d_1 + 115$	50 ± 12	R	**535 VE R**
		521	32,5	65	21	$d_1 + 24$	$d_1 + 115$	50 ± 12	R	**535 VRME R**
540	**545**	526	32,5	65	30	$d_1 + 24$	$d_1 + 115$	50 ± 12	R	**540 VE R**
		526	32,5	65	21	$d_1 + 24$	$d_1 + 115$	50 ± 12	R	**540 VRME R**
545	**550**	531	32,5	65	30	$d_1 + 24$	$d_1 + 115$	50 ± 12	R	**545 VE R**
		531	32,5	65	21	$d_1 + 24$	$d_1 + 115$	50 ± 12	R	**545 VRME R**

d_1 **550–792** mm

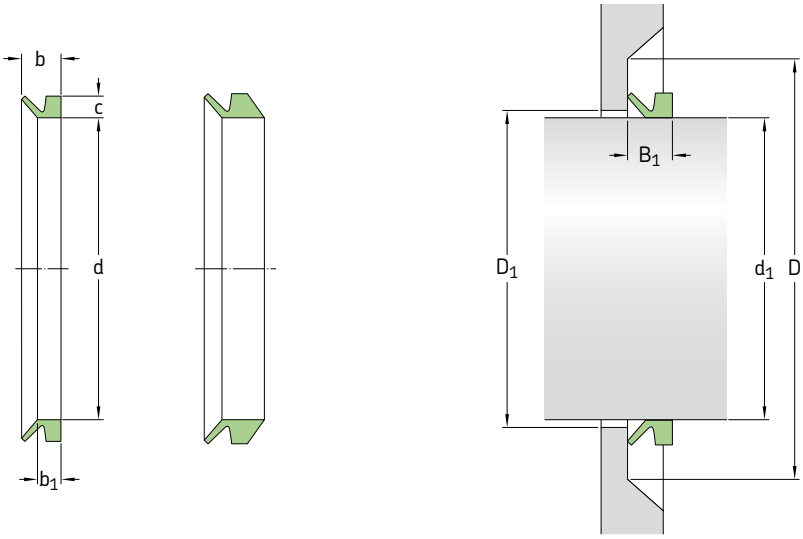

Dimensions Shaft diameter range d_1 over	 incl.	Seal inside diameter, free state d	Seal seat width b_1	Nominal seal width b	Nominal seal height c	Clearance D_1 max.	Counterface D min.	Seal fitted width B_1	Lip code	Designation
mm									–	–
550	**555**	536	32,5	65	30	$d_1 + 24$	$d_1 + 115$	50 ± 12	R	**550 VE R**
		536	32,5	65	21	$d_1 + 24$	$d_1 + 115$	50 ± 12	R	**550 VRME R**
555	**560**	541	32,5	65	30	$d_1 + 24$	$d_1 + 115$	50 ± 12	R	**555 VE R**
		541	32,5	65	21	$d_1 + 24$	$d_1 + 115$	50 ± 12	R	**555 VRME R**
560	**565**	546	32,5	65	30	$d_1 + 24$	$d_1 + 115$	50 ± 12	R	**560 VE R**
		546	32,5	65	21	$d_1 + 24$	$d_1 + 115$	50 ± 12	R	**560 VRME R**
565	**570**	550	32,5	65	30	$d_1 + 24$	$d_1 + 115$	50 ± 12	R	**565 VE R**
		550	32,5	65	21	$d_1 + 24$	$d_1 + 115$	50 ± 12	R	**565 VRME R**
570	**575**	555	32,5	65	30	$d_1 + 24$	$d_1 + 115$	50 ± 12	R	**570 VE R**
		555	32,5	65	21	$d_1 + 24$	$d_1 + 115$	50 ± 12	R	**570 VRME R**
575	**580**	560	32,5	65	30	$d_1 + 24$	$d_1 + 115$	50 ± 12	R	**575 VE R**
		560	32,5	65	21	$d_1 + 24$	$d_1 + 115$	50 ± 12	R	**575 VRME R**
575	**625**	540	6	10,5	6,5	$d_1 + 5$	$d_1 + 20$	8 ± 1,5	R	**600 VL R**
		540	6	10,5	6,5	$d_1 + 5$	$d_1 + 20$	8 ± 1,5	V	**600 VL V**
580	**630**	540	14,3	25	15	$d_1 + 10$	$d_1 + 45$	20 ± 4	R	**600 VA R**
		540	14,3	25	15	$d_1 + 10$	$d_1 + 45$	20 ± 4	V	**600 VA V**
580	**585**	565	32,5	65	30	$d_1 + 24$	$d_1 + 115$	50 ± 12	R	**580 VE R**
		565	32,5	65	21	$d_1 + 24$	$d_1 + 115$	50 ± 12	R	**580 VRME R**
585	**590**	570	32,5	65	30	$d_1 + 24$	$d_1 + 115$	50 ± 12	R	**585 VE R**
		570	32,5	65	21	$d_1 + 24$	$d_1 + 115$	50 ± 12	R	**585 VRME R**
590	**600**	575	32,5	65	30	$d_1 + 24$	$d_1 + 115$	50 ± 12	R	**590 VE R**
		575	32,5	65	21	$d_1 + 24$	$d_1 + 115$	50 ± 12	R	**590 VRME R**
600	**610**	582	32,5	65	30	$d_1 + 24$	$d_1 + 115$	50 ± 12	R	**600 VE R**
		582	32,5	65	21	$d_1 + 24$	$d_1 + 115$	50 ± 12	R	**600 VRME R**
610	**620**	592	32,5	65	30	$d_1 + 24$	$d_1 + 115$	50 ± 12	R	**610 VE R**
		592	32,5	65	21	$d_1 + 24$	$d_1 + 115$	50 ± 12	R	**610 VRME R**
620	**630**	602	32,5	65	30	$d_1 + 24$	$d_1 + 115$	50 ± 12	R	**620 VE R**
		602	32,5	65	21	$d_1 + 24$	$d_1 + 115$	50 ± 12	R	**620 VRME R**
615	**675**	600	6	10,5	6,5	$d_1 + 5$	$d_1 + 20$	8 ± 1,5	R	**650 VL R**
		600	6	10,5	6,5	$d_1 + 5$	$d_1 + 20$	8 ± 1,5	V	**650 VL V**

Dimensions Shaft diameter range d_1 over	incl.	Seal inside diameter, free state d	Seal seat width b_1	Nominal seal width b	Nominal seal height c	Clearance D_1 max.	Counterface D min.	Seal fitted width B_1	Lip code	Designation
mm									–	–
630	**665**	600	14,3	25	15	d_1 + 10	d_1 + 45	20 ± 4	R	**650 VA R**
		600	14,3	25	15	d_1 + 10	d_1 + 45	20 ± 4	V	**650 VA V**
630	**640**	612	32,5	65	30	d_1 + 24	d_1 + 115	50 ± 12	R	**630 VE R**
		612	32,5	65	21	d_1 + 24	d_1 + 115	50 ± 12	R	**630 VRME R**
640	**650**	621	32,5	65	30	d_1 + 24	d_1 + 115	50 ± 12	R	**640 VE R**
		621	32,5	65	21	d_1 + 24	d_1 + 115	50 ± 12	R	**640 VRME R**
650	**660**	631	32,5	65	30	d_1 + 24	d_1 + 115	50 ± 12	R	**650 VE R**
		631	32,5	65	21	d_1 + 24	d_1 + 115	50 ± 12	R	**650 VRME R**
660	**670**	640	32,5	65	30	d_1 + 24	d_1 + 115	50 ± 12	R	**660 VE R**
		640	32,5	65	21	d_1 + 24	d_1 + 115	50 ± 12	R	**660 VRME R**
675	**710**	630	6	10,5	6,5	d_1 + 5	d_1 + 20	8 ± 1,5	R	**700 VL R**
		630	6	10,5	6,5	d_1 + 5	d_1 + 20	8 ± 1,5	V	**700 VL V**
665	**705**	630	14,3	25	15	d_1 + 10	d_1 + 45	20 ± 4	R	**700 VA R**
		630	14,3	25	15	d_1 + 10	d_1 + 45	20 ± 4	V	**700 VA V**
670	**680**	650	32,5	65	30	d_1 + 24	d_1 + 115	50 ± 12	R	**670 VE R**
		650	32,5	65	21	d_1 + 24	d_1 + 115	50 ± 12	R	**670 VRME R**
680	**690**	660	32,5	65	30	d_1 + 24	d_1 + 115	50 ± 12	R	**680 VE R**
		660	32,5	65	21	d_1 + 24	d_1 + 115	50 ± 12	R	**680 VRME R**
690	**700**	670	32,5	65	30	d_1 + 24	d_1 + 115	50 ± 12	R	**690 VE R**
		670	32,5	65	21	d_1 + 24	d_1 + 115	50 ± 12	R	**690 VRME R**
700	**710**	680	32,5	65	30	d_1 + 24	d_1 + 115	50 ± 12	R	**700 VE R**
		680	32,5	65	21	d_1 + 24	d_1 + 115	50 ± 12	R	**700 VRME R**
710	**740**	670	6	10,5	6,5	d_1 + 5	d_1 + 20	8 ± 1,5	R	**725 VL R**
		670	6	10,5	6,5	d_1 + 5	d_1 + 20	8 ± 1,5	V	**725 VL V**
705	**745**	670	14,3	25	15	d_1 + 10	d_1 + 45	20 ± 4	R	**725 VA R**
		670	14,3	25	15	d_1 + 10	d_1 + 45	20 ± 4	V	**725 VA V**
710	**720**	689	32,5	65	30	d_1 + 24	d_1 + 115	50 ± 12	R	**710 VE R**
		689	32,5	65	21	d_1 + 24	d_1 + 115	50 ± 12	R	**710 VRME R**
720	**730**	699	32,5	65	30	d_1 + 24	d_1 + 115	50 ± 12	R	**720 VE R**
		699	32,5	65	21	d_1 + 24	d_1 + 115	50 ± 12	R	**720 VRME R**
730	**740**	709	32,5	65	30	d_1 + 24	d_1 + 115	50 ± 12	R	**730 VE R**
		709	32,5	65	21	d_1 + 24	d_1 + 115	50 ± 12	R	**730 VRME R**
740	**750**	718	32,5	65	30	d_1 + 24	d_1 + 115	50 ± 12	R	**740 VE R**
		718	32,5	65	21	d_1 + 24	d_1 + 115	50 ± 12	R	**740 VRME R**
740	**775**	705	6	10,5	6,5	d_1 + 5	d_1 + 20	8 ± 1,5	R	**750 VL R**
		705	6	10,5	6,5	d_1 + 5	d_1 + 20	8 ± 1,5	V	**750 VL V**
745	**785**	705	14,3	25	15	d_1 + 10	d_1 + 45	20 ± 4	R	**750 VA R**
		705	14,3	25	15	d_1 + 10	d_1 + 45	20 ± 4	V	**750 VA V**
750	**758**	728	32,5	65	30	d_1 + 24	d_1 + 115	50 ± 12	R	**750 VE R**
		728	32,5	65	21	d_1 + 24	d_1 + 115	50 ± 12	R	**750 VRME R**
758	**766**	735	32,5	65	30	d_1 + 24	d_1 + 115	50 ± 12	R	**760 VE R**
		735	32,5	65	21	d_1 + 24	d_1 + 115	50 ± 12	R	**760 VRME R**
766	**774**	743	32,5	65	30	d_1 + 24	d_1 + 115	50 ± 12	R	**770 VE R**
		743	32,5	65	21	d_1 + 24	d_1 + 115	50 ± 12	R	**770 VRME R**
774	**783**	751	32,5	65	30	d_1 + 24	d_1 + 115	50 ± 12	R	**780 VE R**
		751	32,5	65	21	d_1 + 24	d_1 + 115	50 ± 12	R	**780 VRME R**
783	**792**	759	32,5	65	30	d_1 + 24	d_1 + 115	50 ± 12	R	**790 VE R**
		759	32,5	65	21	d_1 + 24	d_1 + 115	50 ± 12	R	**790 VRME R**

d_1 **775–1 105** mm

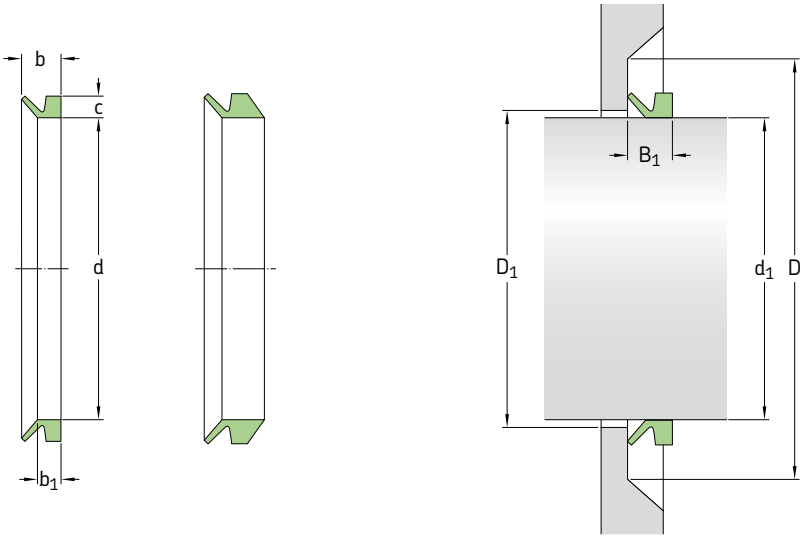

Dimensions Shaft diameter range d_1 over	 incl.	Seal inside diameter, free state d	Seal seat width b_1	Nominal seal width b	Nominal seal height c	Clearance D_1 max.	Counterface D min.	Seal fitted width B_1	Lip code	Designation
mm									–	–
775	**825**	745	6	10,5	6,5	$d_1 + 5$	$d_1 + 20$	8 ± 1,5	R	**800 VL R**
		745	6	10,5	6,5	$d_1 + 5$	$d_1 + 20$	8 ± 1,5	V	**800 VL V**
785	**830**	745	14,3	25	15	$d_1 + 10$	$d_1 + 45$	20 ± 4	R	**800 VA R**
		745	14,3	25	15	$d_1 + 10$	$d_1 + 45$	20 ± 4	V	**800 VA V**
792	**801**	768	32,5	65	30	$d_1 + 24$	$d_1 + 115$	50 ± 12	R	**800 VE R**
		768	32,5	65	21	$d_1 + 24$	$d_1 + 115$	50 ± 12	R	**800 VRME R**
801	**810**	777	32,5	65	30	$d_1 + 24$	$d_1 + 115$	50 ± 12	R	**810 VE R**
		777	32,5	65	21	$d_1 + 24$	$d_1 + 115$	50 ± 12	R	**810 VRME R**
810	**821**	786	32,5	65	30	$d_1 + 24$	$d_1 + 115$	50 ± 12	R	**820 VE R**
		786	32,5	65	21	$d_1 + 24$	$d_1 + 115$	50 ± 12	R	**820 VRME R**
821	**831**	796	32,5	65	30	$d_1 + 24$	$d_1 + 115$	50 ± 12	R	**830 VE R**
		796	32,5	65	21	$d_1 + 24$	$d_1 + 115$	50 ± 12	R	**830 VRME R**
825	**875**	785	6	10,5	6,5	$d_1 + 5$	$d_1 + 20$	8 ± 1,5	R	**850 VL R**
		785	6	10,5	6,5	$d_1 + 5$	$d_1 + 20$	8 ± 1,5	V	**850 VL V**
830	**875**	785	14,3	25	15	$d_1 + 10$	$d_1 + 45$	20 ± 4	R	**850 VA R**
		785	14,3	25	15	$d_1 + 10$	$d_1 + 45$	20 ± 4	V	**850 VA V**
831	**841**	805	32,5	65	30	$d_1 + 24$	$d_1 + 115$	50 ± 12	R	**840 VE R**
		805	32,5	65	21	$d_1 + 24$	$d_1 + 115$	50 ± 12	R	**840 VRME R**
841	**851**	814	32,5	65	30	$d_1 + 24$	$d_1 + 115$	50 ± 12	R	**850 VE R**
		814	32,5	65	21	$d_1 + 24$	$d_1 + 115$	50 ± 12	R	**850 VRME R**
851	**861**	824	32,5	65	30	$d_1 + 24$	$d_1 + 115$	50 ± 12	R	**860 VE R**
		824	32,5	65	21	$d_1 + 24$	$d_1 + 115$	50 ± 12	R	**860 VRME R**
861	**871**	833	32,5	65	30	$d_1 + 24$	$d_1 + 115$	50 ± 12	R	**870 VE R**
		833	32,5	65	21	$d_1 + 24$	$d_1 + 115$	50 ± 12	R	**870 VRME R**
871	**882**	843	32,5	65	30	$d_1 + 24$	$d_1 + 115$	50 ± 12	R	**880 VE R**
		843	32,5	65	21	$d_1 + 24$	$d_1 + 115$	50 ± 12	R	**880 VRME R**
875	**925**	825	6	10,5	6,5	$d_1 + 5$	$d_1 + 20$	8 ± 1,5	R	**900 VL R**
		825	6	10,5	6,5	$d_1 + 5$	$d_1 + 20$	8 ± 1,5	V	**900 VL V**
875	**920**	825	14,3	25	15	$d_1 + 10$	$d_1 + 45$	20 ± 4	R	**900 VA R**
		825	14,3	25	15	$d_1 + 10$	$d_1 + 45$	20 ± 4	V	**900 VA V**

Dimensions Shaft diameter range d_1 over	incl.	Seal inside diameter, free state d	Seal seat width b_1	Nominal seal width b	Nominal seal height c	Clearance D_1 max.	Counterface D min.	Seal fitted width B_1	Lip code	Designation
mm									–	–
882	**892**	853	32,5	65	30	d_1 + 24	d_1 + 115	50 ± 12	R	**890 VE R**
		853	32,5	65	21	d_1 + 24	d_1 + 115	50 ± 12	R	**890 VRME R**
892	**912**	871	32,5	65	30	d_1 + 24	d_1 + 115	50 ± 12	R	**900 VE R**
		871	32,5	65	21	d_1 + 24	d_1 + 115	50 ± 12	R	**900 VRME R**
912	**922**	880	32,5	65	30	d_1 + 24	d_1 + 115	50 ± 12	R	**920 VE R**
		880	32,5	65	21	d_1 + 24	d_1 + 115	50 ± 12	R	**920 VRME R**
925	**975**	865	6	10,5	6,5	d_1 + 5	d_1 + 20	8 ± 1,5	R	**950 VL R**
		865	6	10,5	6,5	d_1 + 5	d_1 + 20	8 ± 1,5	V	**950 VL V**
920	**965**	865	14,3	25	15	d_1 + 10	d_1 + 45	20 ± 4	R	**950 VA R**
		865	14,3	25	15	d_1 + 10	d_1 + 45	20 ± 4	V	**950 VA V**
922	**933**	890	32,5	65	30	d_1 + 24	d_1 + 115	50 ± 12	R	**930 VE R**
		890	32,5	65	21	d_1 + 24	d_1 + 115	50 ± 12	R	**930 VRME R**
933	**944**	900	32,5	65	30	d_1 + 24	d_1 + 115	50 ± 12	R	**940 VE R**
		900	32,5	65	21	d_1 + 24	d_1 + 115	50 ± 12	R	**940 VRME R**
944	**955**	911	32,5	65	30	d_1 + 24	d_1 + 115	50 ± 12	R	**950 VE R**
		911	32,5	65	21	d_1 + 24	d_1 + 115	50 ± 12	R	**950 VRME R**
955	**966**	921	32,5	65	30	d_1 + 24	d_1 + 115	50 ± 12	R	**960 VE R**
		921	32,5	65	21	d_1 + 24	d_1 + 115	50 ± 12	R	**960 VRME R**
975	**1 025**	910	6	10,5	6,5	d_1 + 5	d_1 + 20	8 ± 1,5	R	**1000 VL R**
		910	6	10,5	6,5	d_1 + 5	d_1 + 20	8 ± 1,5	V	**1000 VL V**
965	**1 015**	910	14,3	25	15	d_1 + 10	d_1 + 45	20 ± 4	R	**1000 VA R**
		910	14,3	25	15	d_1 + 10	d_1 + 45	20 ± 4	V	**1000 VA V**
966	**977**	932	32,5	65	30	d_1 + 24	d_1 + 115	50 ± 12	R	**970 VE R**
		932	32,5	65	21	d_1 + 24	d_1 + 115	50 ± 12	R	**970 VRME R**
977	**988**	942	32,5	65	30	d_1 + 24	d_1 + 115	50 ± 12	R	**980 VE R**
		942	32,5	65	21	d_1 + 24	d_1 + 115	50 ± 12	R	**980 VRME R**
988	**999**	953	32,5	65	30	d_1 + 24	d_1 + 115	50 ± 12	R	**990 VE R**
		953	32,5	65	21	d_1 + 24	d_1 + 115	50 ± 12	R	**990 VRME R**
999	**1 010**	963	32,5	65	30	d_1 + 24	d_1 + 115	50 ± 12	R	**1000 VE R**
		963	32,5	65	21	d_1 + 24	d_1 + 115	50 ± 12	R	**1000 VRME R**
1 010	**1 025**	973	32,5	65	30	d_1 + 24	d_1 + 115	50 ± 12	R	**1020 VE R**
		973	32,5	65	21	d_1 + 24	d_1 + 115	50 ± 12	R	**1020 VRME R**
1 025	**1 075**	955	6	10,5	6,5	d_1 + 5	d_1 + 20	8 ± 1,5	R	**1050 VL R**
		955	6	10,5	6,5	d_1 + 5	d_1 + 20	8 ± 1,5	V	**1050 VL V**
1 015	**1 065**	955	14,3	25	15	d_1 + 10	d_1 + 45	20 ± 4	R	**1050 VA R**
1 025	**1 045**	990	32,5	65	30	d_1 + 24	d_1 + 115	50 ± 12	R	**1040 VE R**
		990	32,5	65	21	d_1 + 24	d_1 + 115	50 ± 12	R	**1040 VRME R**
1 045	**1 065**	1 008	32,5	65	30	d_1 + 24	d_1 + 115	50 ± 12	R	**1060 VE R**
		1 008	32,5	65	21	d_1 + 24	d_1 + 115	50 ± 12	R	**1060 VRME R**
1 075	**1 125**	1 000	6	10,5	6,5	d_1 + 5	d_1 + 20	8 ± 1,5	R	**1100 VL R**
		1 000	6	10,5	6,5	d_1 + 5	d_1 + 20	8 ± 1,5	V	**1100 VL V**
1 065	**1 115**	1 000	14,3	25	15	d_1 + 10	d_1 + 45	20 ± 4	R	**1100 VA R**
1 065	**1 085**	1 027	32,5	65	30	d_1 + 24	d_1 + 115	50 ± 12	R	**1080 VE R**
		1 027	32,5	65	21	d_1 + 24	d_1 + 115	50 ± 12	R	**1080 VRME R**
1 085	**1 105**	1 045	32,5	65	30	d_1 + 24	d_1 + 115	50 ± 12	R	**1100 VE R**
		1 045	32,5	65	21	d_1 + 24	d_1 + 115	50 ± 12	R	**1100 VRME R**

d_1 **1 105–1 640** mm

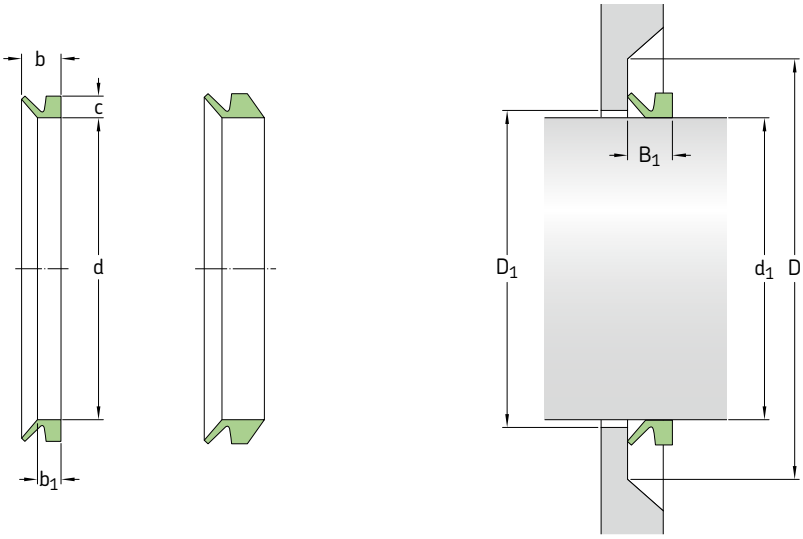

Dimensions Shaft diameter range d_1 over	 incl.	Seal inside diameter, free state d	Seal seat width b_1	Nominal seal width b	Nominal seal height c	Clearance D_1 max.	Counterface D min.	Seal fitted width B_1	Lip code	Designation
mm									–	–
1 105	**1 125**	1 065	32,5	65	30	d_1 + 24	d_1 + 115	50 ± 12	R	**1120 VE R**
		1 065	32,5	65	21	d_1 + 24	d_1 + 115	50 ± 12	R	**1120 VRME R**
1 125	**1 175**	1 045	6	10,5	6,5	d_1 + 5	d_1 + 20	8 ± 1,5	R	**1150 VL R**
		1 045	6	10,5	6,5	d_1 + 5	d_1 + 20	8 ± 1,5	V	**1150 VL V**
1 115	**1 165**	1 045	14,3	25	15	d_1 + 10	d_1 + 45	20 ± 4	R	**1150 VA R**
1 125	**1 145**	1 084	32,5	65	30	d_1 + 24	d_1 + 115	50 ± 12	R	**1140 VE R**
		1 084	32,5	65	21	d_1 + 24	d_1 + 115	50 ± 12	R	**1140 VRME R**
1 145	**1 165**	1 103	32,5	65	30	d_1 + 24	d_1 + 115	50 ± 12	R	**1160 VE R**
		1 103	32,5	65	21	d_1 + 24	d_1 + 115	50 ± 12	R	**1160 VRME R**
1 175	**1 225**	1 090	6	10,5	6,5	d_1 + 5	d_1 + 20	8 ± 1,5	R	**1200 VL R**
		1 090	6	10,5	6,5	d_1 + 5	d_1 + 20	8 ± 1,5	V	**1200 VL V**
1 165	**1 215**	1 090	14,3	25	15	d_1 + 10	d_1 + 45	20 ± 4	R	**1200 VA R**
1 165	**1 185**	1 121	32,5	65	30	d_1 + 24	d_1 + 115	50 ± 12	R	**1180 VE R**
		1 121	32,5	65	21	d_1 + 24	d_1 + 115	50 ± 12	R	**1180 VRME R**
1 185	**1 205**	1 139	32,5	65	30	d_1 + 24	d_1 + 115	50 ± 12	R	**1200 VE R**
		1 139	32,5	65	21	d_1 + 24	d_1 + 115	50 ± 12	R	**1200 VRME R**
1 205	**1 225**	1 157	32,5	65	30	d_1 + 24	d_1 + 115	50 ± 12	R	**1220 VE R**
		1 157	32,5	65	21	d_1 + 24	d_1 + 115	50 ± 12	R	**1220 VRME R**
1 225	**1 275**	1 135	6	10,5	6,5	d_1 + 5	d_1 + 20	8 ± 1,5	R	**1250 VL R**
		1 135	6	10,5	6,5	d_1 + 5	d_1 + 20	8 ± 1,5	V	**1250 VL V**
1 215	**1 270**	1 135	14,3	25	15	d_1 + 10	d_1 + 45	20 ± 4	R	**1250 VA R**
1 225	**1 245**	1 176	32,5	65	30	d_1 + 24	d_1 + 115	50 ± 12	R	**1240 VE R**
		1 176	32,5	65	21	d_1 + 24	d_1 + 115	50 ± 12	R	**1240 VRME R**
1 245	**1 270**	1 195	32,5	65	30	d_1 + 24	d_1 + 115	50 ± 12	R	**1260 VE R**
		1 195	32,5	65	21	d_1 + 24	d_1 + 115	50 ± 12	R	**1260 VRME R**
1 270	**1 295**	1 218	32,5	65	30	d_1 + 24	d_1 + 115	50 ± 12	R	**1280 VE R**
		1 218	32,5	65	21	d_1 + 24	d_1 + 115	50 ± 12	R	**1280 VRME R**
1 275	**1 325**	1 180	6	10,5	6,5	d_1 + 5	d_1 + 20	8 ± 1,5	R	**1300 VL R**
		1 180	6	10,5	6,5	d_1 + 5	d_1 + 20	8 ± 1,5	V	**1300 VL V**

Dimensions Shaft diameter range d_1 over	 incl.	Seal inside diameter, free state d	Seal seat width b_1	Nominal seal width b	Nominal seal height c	Clearance D_1 max.	Counterface D min.	Seal fitted width B_1	Lip code	Designation
mm									–	–
1 270	**1 320**	1 180	14,3	25	15	$d_1 + 10$	$d_1 + 45$	20 ± 4	R	**1300 VA R**
1 295	**1 315**	1 240	32,5	65	30	$d_1 + 24$	$d_1 + 115$	50 ± 12	R	**1300 VE R**
		1 240	32,5	65	21	$d_1 + 24$	$d_1 + 115$	50 ± 12	R	**1300 VRME R**
1 315	**1 340**	1 259	32,5	65	30	$d_1 + 24$	$d_1 + 115$	50 ± 12	R	**1325 VE R**
		1 259	32,5	65	21	$d_1 + 24$	$d_1 + 115$	50 ± 12	R	**1325 VRME R**
1 325	**1 375**	1 225	6	10,5	6,5	$d_1 + 5$	$d_1 + 20$	8 ± 1,5	R	**1350 VL R**
		1 225	6	10,5	6,5	$d_1 + 5$	$d_1 + 20$	8 ± 1,5	V	**1350 VL V**
1 320	**1 370**	1 225	14,3	25	15	$d_1 + 10$	$d_1 + 45$	20 ± 4	R	**1350 VA R**
1 340	**1 365**	1 281	32,5	65	30	$d_1 + 24$	$d_1 + 115$	50 ± 12	R	**1350 VE R**
		1 281	32,5	65	21	$d_1 + 24$	$d_1 + 115$	50 ± 12	R	**1350 VRME R**
1 365	**1 390**	1 305	32,5	65	30	$d_1 + 24$	$d_1 + 115$	50 ± 12	R	**1375 VE R**
		1 305	32,5	65	21	$d_1 + 24$	$d_1 + 115$	50 ± 12	R	**1375 VRME R**
1 375	**1 425**	1 270	6	10,5	6,5	$d_1 + 5$	$d_1 + 20$	8 ± 1,5	R	**1400 VL R**
		1 270	6	10,5	6,5	$d_1 + 5$	$d_1 + 20$	8 ± 1,5	V	**1400 VL V**
1 370	**1 420**	1 270	14,3	25	15	$d_1 + 10$	$d_1 + 45$	20 ± 4	R	**1400 VA R**
1 390	**1 415**	1 328	32,5	65	30	$d_1 + 24$	$d_1 + 115$	50 ± 12	R	**1400 VE R**
		1 328	32,5	65	21	$d_1 + 24$	$d_1 + 115$	50 ± 12	R	**1400 VRME R**
1 415	**1 440**	1 350	32,5	65	30	$d_1 + 24$	$d_1 + 115$	50 ± 12	R	**1425 VE R**
		1 350	32,5	65	21	$d_1 + 24$	$d_1 + 115$	50 ± 12	R	**1425 VRME R**
1 425	**1 475**	1 315	6	10,5	6,5	$d_1 + 5$	$d_1 + 20$	8 ± 1,5	R	**1450 VL R**
		1 315	6	10,5	6,5	$d_1 + 5$	$d_1 + 20$	8 ± 1,5	V	**1450 VL V**
1 420	**1 470**	1 315	14,3	25	15	$d_1 + 10$	$d_1 + 45$	20 ± 4	R	**1450 VA R**
1 440	**1 465**	1 374	32,5	65	30	$d_1 + 24$	$d_1 + 115$	50 ± 12	R	**1450 VE R**
		1 374	32,5	65	21	$d_1 + 24$	$d_1 + 115$	50 ± 12	R	**1450 VRME R**
1 465	**1 490**	1 397	32,5	65	30	$d_1 + 24$	$d_1 + 115$	50 ± 12	R	**1475 VE R**
		1 397	32,5	65	21	$d_1 + 24$	$d_1 + 115$	50 ± 12	R	**1475 VRME R**
1 475	**1 525**	1 360	6	10,5	6,5	$d_1 + 5$	$d_1 + 20$	8 ± 1,5	R	**1500 VL R**
		1 360	6	10,5	6,5	$d_1 + 5$	$d_1 + 20$	8 ± 1,5	V	**1500 VL V**
1 470	**1 520**	1 360	14,3	25	15	$d_1 + 10$	$d_1 + 45$	20 ± 4	R	**1500 VA R**
1 490	**1 515**	1 419	32,5	65	30	$d_1 + 24$	$d_1 + 115$	50 ± 12	R	**1500 VE R**
		1 419	32,5	65	21	$d_1 + 24$	$d_1 + 115$	50 ± 12	R	**1500 VRME R**
1 515	**1 540**	1 443	32,5	65	30	$d_1 + 24$	$d_1 + 115$	50 ± 12	R	**1525 VE R**
		1 443	32,5	65	21	$d_1 + 24$	$d_1 + 115$	50 ± 12	R	**1525 VRME R**
1 525	**1 575**	1 405	6	10,5	6,5	$d_1 + 5$	$d_1 + 20$	8 ± 1,5	R	**1550 VL R**
		1 405	6	10,5	6,5	$d_1 + 5$	$d_1 + 20$	8 ± 1,5	V	**1550 VL V**
1 520	**1 570**	1 405	14,3	25	15	$d_1 + 10$	$d_1 + 45$	20 ± 4	R	**1550 VA R**
1 540	**1 570**	1 467	32,5	65	30	$d_1 + 24$	$d_1 + 115$	50 ± 12	R	**1550 VE R**
		1 467	32,5	65	21	$d_1 + 24$	$d_1 + 115$	50 ± 12	R	**1550 VRME R**
1 570	**1 600**	1 495	32,5	65	30	$d_1 + 24$	$d_1 + 115$	50 ± 12	R	**1575 VE R**
		1 495	32,5	65	21	$d_1 + 24$	$d_1 + 115$	50 ± 12	R	**1575 VRME R**
1 575	**1 625**	1 450	6	10,5	6,5	$d_1 + 5$	$d_1 + 20$	8 ± 1,5	R	**1600 VL R**
		1 450	6	10,5	6,5	$d_1 + 5$	$d_1 + 20$	8 ± 1,5	V	**1600 VL V**
1 570	**1 620**	1 450	14,3	25	15	$d_1 + 10$	$d_1 + 45$	20 ± 4	R	**1600 VA R**
1 600	**1 640**	1 524	32,5	65	30	$d_1 + 24$	$d_1 + 115$	50 ± 12	R	**1600 VE R**
		1 524	32,5	65	21	$d_1 + 24$	$d_1 + 115$	50 ± 12	R	**1600 VRME R**

d_1 **1 625–2 020** mm

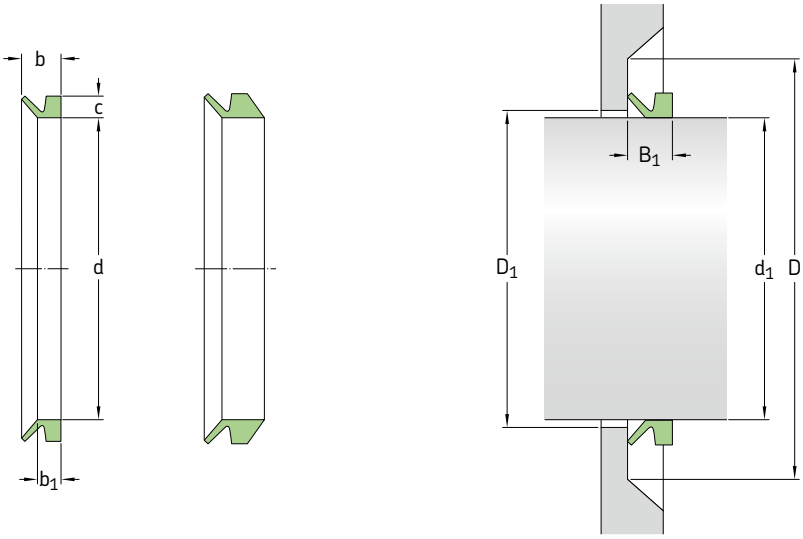

Dimensions Shaft diameter range d_1 over	 incl.	Seal inside diameter, free state d	Seal seat width b_1	Nominal seal width b	Nominal seal height c	Clearance D_1 max.	Counterface D min.	Seal fitted width B_1	Lip code	Designation
mm									–	–
1 625	**1 675**	1 495	6	10,5	6,5	d_1 + 5	d_1 + 20	8 ± 1,5	R	**1650 VL R**
		1 495	6	10,5	6,5	d_1 + 5	d_1 + 20	8 ± 1,5	V	**1650 VL V**
1 620	**1 670**	1 495	14,3	25	15	d_1 + 10	d_1 + 45	20 ± 4	R	**1650 VA R**
1 640	**1 680**	1 559	32,5	65	30	d_1 + 24	d_1 + 115	50 ± 12	R	**1650 VE R**
		1 559	32,5	65	21	d_1 + 24	d_1 + 115	50 ± 12	R	**1650 VRME R**
1 675	**1 725**	1 540	6	10,5	6,5	d_1 + 5	d_1 + 20	8 ± 1,5	R	**1700 VL R**
		1 540	6	10,5	6,5	d_1 + 5	d_1 + 20	8 ± 1,5	V	**1700 VL V**
1 670	**1 720**	1 540	14,3	25	15	d_1 + 10	d_1 + 45	20 ± 4	R	**1700 VA R**
1 720	**1 720**	1 596	32,5	65	30	d_1 + 24	d_1 + 115	50 ± 12	R	**1700 VE R**
		1 596	32,5	65	21	d_1 + 24	d_1 + 115	50 ± 12	R	**1700 VRME R**
1 725	**1 775**	1 585	6	10,5	6,5	d_1 + 5	d_1 + 20	8 ± 1,5	R	**1750 VL R**
		1 585	6	10,5	6,5	d_1 + 5	d_1 + 20	8 ± 1,5	V	**1750 VL V**
1 720	**1 770**	1 585	14,3	25	15	d_1 + 10	d_1 + 45	20 ± 4	R	**1750 VA R**
1 720	**1 765**	1 632	32,5	65	30	d_1 + 24	d_1 + 115	50 ± 12	R	**1750 VE R**
		1 632	32,5	65	21	d_1 + 24	d_1 + 115	50 ± 12	R	**1750 VRME R**
1 765	**1 810**	1 671	32,5	65	30	d_1 + 24	d_1 + 115	50 ± 12	R	**1800 VE R**
		1 671	32,5	65	21	d_1 + 24	d_1 + 115	50 ± 12	R	**1800 VRME R**
1 775	**1 825**	1 630	6	10,5	6,5	d_1 + 5	d_1 + 20	8 ± 1,5	R	**1800 VL R**
		1 630	6	10,5	6,5	d_1 + 5	d_1 + 20	8 ± 1,5	V	**1800 VL V**
1 770	**1 820**	1 630	14,3	25	15	d_1 + 10	d_1 + 45	20 ± 4	R	**1800 VA R**
1 810	**1 855**	1 714	32,5	65	30	d_1 + 24	d_1 + 115	50 ± 12	R	**1850 VE R**
		1 714	32,5	65	21	d_1 + 24	d_1 + 115	50 ± 12	R	**1850 VRME R**
1 825	**1 875**	1 675	6	10,5	6,5	d_1 + 5	d_1 + 20	8 ± 1,5	R	**1850 VL R**
		1 675	6	10,5	6,5	d_1 + 5	d_1 + 20	8 ± 1,5	V	**1850 VL V**
1 820	**1 870**	1 675	14,3	25	15	d_1 + 10	d_1 + 45	20 ± 4	R	**1850 VA R**
1 855	**1 905**	1 753	32,5	65	30	d_1 + 24	d_1 + 115	50 ± 12	R	**1900 VE R**
		1 753	32,5	65	21	d_1 + 24	d_1 + 115	50 ± 12	R	**1900 VRME R**
1 875	**1 925**	1 720	6	10,5	6,5	d_1 + 5	d_1 + 20	8 ± 1,5	R	**1900 VL R**
		1 720	6	10,5	6,5	d_1 + 5	d_1 + 20	8 ± 1,5	V	**1900 VL V**

Dimensions Shaft diameter range d_1 over	 incl.	Seal inside diameter, free state d	Seal seat width b_1	Nominal seal width b	Nominal seal height c	Clearance D_1 max.	Counterface D min.	Seal fitted width B_1	Lip code	Designation
mm									–	–
1 870	**1 920**	1 720	14,3	25	15	$d_1 + 10$	$d_1 + 45$	20 ± 4	R	**1900 VA R**
1 905	**1 955**	1 794	32,5	65	30	$d_1 + 24$	$d_1 + 115$	50 ± 12	R	**1950 VE R**
		1 794	32,5	65	21	$d_1 + 24$	$d_1 + 115$	50 ± 12	R	**1950 VRME R**
1 925	**1 975**	1 765	6	10,5	6,5	$d_1 + 5$	$d_1 + 20$	8 ± 1,5	R	**1950 VL R**
		1 765	6	10,5	6,5	$d_1 + 5$	$d_1 + 20$	8 ± 1,5	V	**1950 VL V**
1 920	**1 970**	1 765	14,3	25	15	$d_1 + 10$	$d_1 + 45$	20 ± 4	R	**1950 VA R**
1 955	**2 010**	1 844	32,5	65	30	$d_1 + 24$	$d_1 + 115$	50 ± 12	R	**2000 VE R**
		1 844	32,5	65	21	$d_1 + 24$	$d_1 + 115$	50 ± 12	R	**2000 VRME R**
1 975	**2 025**	1 810	6	10,5	6,5	$d_1 + 5$	$d_1 + 20$	8 ± 1,5	R	**2000 VL R**
		1 810	6	10,5	6,5	$d_1 + 5$	$d_1 + 20$	8 ± 1,5	V	**2000 VL V**
1 970	**2 020**	1 810	14,3	25	15	$d_1 + 10$	$d_1 + 45$	20 ± 4	R	**2000 VA R**

d_1 **0.11–2.28** in

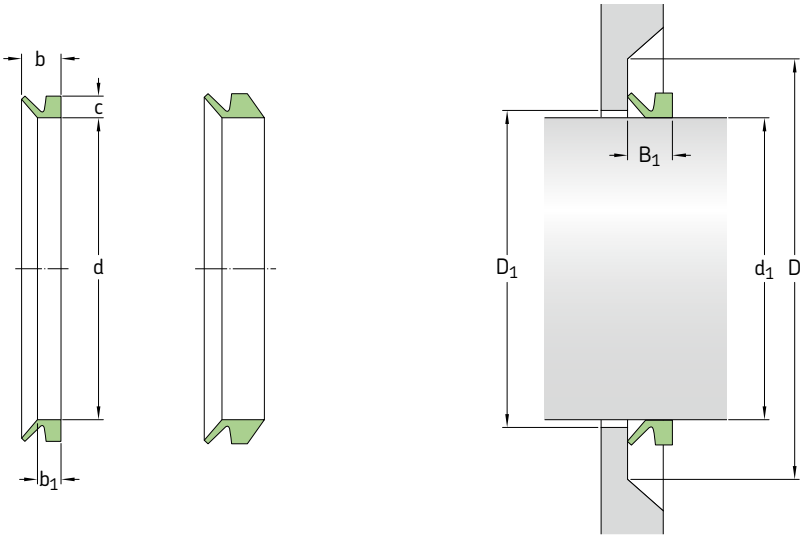

Dimensions									Lip code	Designation
Shaft diameter range d_1 over	incl.	Seal inside diameter, free state d	Nominal seal height c	Seal seat width b_1	Nominal seal width b	Clearance D_1 max.	Counterface D min.	Seal fitted width B_1		
in									–	–
0.11	**0.14**	0.10	0.06	0.08	0.12	0.04	0.16	0.10 ± 0.012	R	**3 VA R**
		0.10	0.06	0.08	0.12	0.04	0.16	0.10 ± 0.012	V	**3 VA V**
0.14	**0.18**	0.13	0.08	0.09	0.15	0.04	0.24	0.12 ± 0.016	R	**4 VA R**
		0.13	0.08	0.09	0.15	0.04	0.24	0.12 ± 0.016	V	**4 VA V**
0.18	**0.22**	0.16	0.08	0.09	0.15	0.04	0.24	0.12 ± 0.016	R	**5 VA R**
		0.16	0.08	0.09	0.15	0.04	0.24	0.12 ± 0.016	V	**5 VA V**
		0.16	0.08	0.15	0.20	0.04	0.24	0.18 ± 0.016	R	**5 VS R**
		0.16	0.08	0.15	0.20	0.04	0.24	0.18 ± 0.016	V	**5 VS V**
0.22	**0.26**	0.20	0.08	0.09	0.15	0.04	0.24	0.12 ± 0.016	R	**6 VA R**
		0.20	0.08	0.09	0.15	0.04	0.24	0.12 ± 0.016	V	**6 VA V**
		0.20	0.08	0.15	0.20	0.04	0.24	0.18 ± 0.016	R	**6 VS R**
		0.20	0.08	0.15	0.20	0.04	0.24	0.18 ± 0.016	V	**6 VS V**
0.26	**0.31**	0.24	0.08	0.09	0.15	0.04	0.24	0.12 ± 0.016	R	**7 VA R**
		0.24	0.08	0.09	0.15	0.04	0.24	0.12 ± 0.016	V	**7 VA V**
		0.24	0.08	0.15	0.20	0.04	0.24	0.18 ± 0.016	R	**7 VS R**
		0.24	0.08	0.15	0.20	0.04	0.24	0.18 ± 0.016	V	**7 VS V**
0.31	**0.37**	0.28	0.08	0.09	0.15	0.04	0.24	0.12 ± 0.016	R	**8 VA R**
		0.28	0.08	0.09	0.15	0.04	0.24	0.12 ± 0.016	V	**8 VA V**
		0.28	0.08	0.15	0.20	0.04	0.24	0.18 ± 0.016	R	**8 VS R**
		0.28	0.08	0.15	0.20	0.04	0.24	0.18 ± 0.016	V	**8 VS V**
0.37	**0.45**	0.35	0.12	0.13	0.22	0.04	0.35	0.18 ± 0.02	R	**10 VA R**
		0.35	0.12	0.13	0.22	0.04	0.35	0.18 ± 0.02	V	**10 VA V**
		0.35	0.12	0.22	0.30	0.04	0.35	0.26 ± 0.02	R	**10 VS R**
		0.35	0.12	0.22	0.30	0.04	0.35	0.26 ± 0.02	V	**10 VS V**
0.45	**0.49**	0.41	0.12	0.13	0.22	0.04	0.35	0.18 ± 0.02	R	**12 VA R**
		0.41	0.12	0.13	0.22	0.04	0.35	0.18 ± 0.02	V	**12 VA V**
0.45	**0.53**	0.41	0.12	0.22	0.30	0.04	0.35	0.26 ± 0.02	R	**12 VS R**
		0.41	0.12	0.22	0.30	0.04	0.35	0.26 ± 0.02	V	**12 VS V**
0.49	**0.53**	0.46	0.12	0.13	0.22	0.04	0.35	0.18 ± 0.02	R	**13 VA R**
		0.46	0.12	0.13	0.22	0.04	0.35	0.18 ± 0.02	V	**13 VA V**
0.53	**0.61**	0.49	0.12	0.13	0.22	0.04	0.35	0.18 ± 0.02	R	**14 VA R**
		0.49	0.12	0.13	0.22	0.04	0.35	0.18 ± 0.02	V	**14 VA V**
0.53	**0.61**	0.49	0.12	0.22	0.30	0.04	0.35	0.26 ± 0.02	R	**14 VS R**
		0.49	0.12	0.22	0.30	0.04	0.35	0.26 ± 0.02	V	**14 VS V**

Dimensions Shaft diameter range d_1 over	incl.	Seal inside diameter, free state d	Nominal seal height c	Seal seat width b_1	Nominal seal width b	Clearance D_1 max.	Counterface D min.	Seal fitted width B_1	Lip code	Designation
in									–	–
0.61	**0.67**	0.55	0.12	0.13	0.22	0.04	0.35	0.18 ± 0.02	R	**16 VA R**
		0.55	0.12	0.13	0.22	0.04	0.35	0.18 ± 0.02	V	**16 VA V**
0.61	**0.69**	0.55	0.12	0.22	0.30	0.04	0.35	0.26 ± 0.02	R	**16 VS R**
		0.55	0.12	0.22	0.30	0.04	0.35	0.26 ± 0.02	V	**16 VS V**
0.69	**0.75**	0.63	0.12	0.13	0.22	0.04	0.35	0.18 ± 0.02	R	**18 VA R**
		0.63	0.12	0.13	0.22	0.04	0.35	0.18 ± 0.02	V	**18 VA V**
		0.63	0.12	0.22	0.30	0.04	0.35	0.26 ± 0.02	R	**18 VS R**
		0.63	0.12	0.22	0.30	0.04	0.35	0.26 ± 0.02	V	**18 VS V**
0.75	**0.83**	0.71	0.16	0.19	0.30	0.08	0.47	0.24 ± 0.03	R	**20 VA R**
		0.71	0.16	0.19	0.30	0.08	0.47	0.24 ± 0.03	V	**20 VA V**
		0.71	0.16	0.31	0.41	0.08	0.47	0.35 ± 0.03	R	**20 VS R**
		0.71	0.16	0.31	0.41	0.08	0.47	0.35 ± 0.03	V	**20 VS V**
0.83	**0.94**	0.79	0.16	0.19	0.30	0.08	0.47	0.24 ± 0.03	R	**22 VA R**
		0.79	0.16	0.19	0.30	0.08	0.47	0.24 ± 0.03	V	**22 VA V**
		0.79	0.16	0.31	0.41	0.08	0.47	0.35 ± 0.03	R	**22 VS R**
		0.79	0.16	0.31	0.41	0.08	0.47	0.35 ± 0.03	V	**22 VS V**
0.94	**1.06**	0.87	0.16	0.19	0.30	0.08	0.47	0.24 ± 0.03	R	**25 VA R**
		0.87	0.16	0.19	0.30	0.08	0.47	0.24 ± 0.03	V	**25 VA V**
		0.87	0.16	0.31	0.41	0.08	0.47	0.35 ± 0.03	R	**25 VS R**
		0.87	0.16	0.31	0.41	0.08	0.47	0.35 ± 0.03	V	**25 VS V**
1.06	**1.14**	0.98	0.16	0.19	0.30	0.08	0.47	0.24 ± 0.03	R	**28 VA R**
		0.98	0.16	0.19	0.30	0.08	0.47	0.24 ± 0.03	V	**28 VA V**
		0.98	0.16	0.31	0.41	0.08	0.47	0.35 ± 0.03	R	**28 VS R**
		0.98	0.16	0.31	0.41	0.08	0.47	0.35 ± 0.03	V	**28 VS V**
1.14	**1.22**	1.06	0.16	0.19	0.30	0.08	0.47	0.24 ± 0.03	R	**30 VA R**
		1.06	0.16	0.19	0.30	0.08	0.47	0.24 ± 0.03	V	**30 VA V**
		1.06	0.16	0.31	0.41	0.08	0.47	0.35 ± 0.03	R	**30 VS R**
		1.06	0.16	0.31	0.41	0.08	0.47	0.35 ± 0.03	V	**30 VS V**
1.22	**1.30**	1.14	0.16	0.19	0.30	0.08	0.47	0.24 ± 0.03	R	**32 VA R**
		1.14	0.16	0.19	0.30	0.08	0.47	0.24 ± 0.03	V	**32 VA V**
		1.14	0.16	0.31	0.41	0.08	0.47	0.35 ± 0.03	R	**32 VS R**
		1.14	0.16	0.31	0.41	0.08	0.47	0.35 ± 0.03	V	**32 VS V**
1.30	**1.42**	1.22	0.16	0.19	0.30	0.08	0.47	0.24 ± 0.03	R	**35 VA R**
		1.22	0.16	0.19	0.30	0.08	0.47	0.24 ± 0.03	V	**35 VA V**
		1.22	0.16	0.31	0.41	0.08	0.47	0.35 ± 0.03	R	**35 VS R**
		1.22	0.16	0.31	0.41	0.08	0.47	0.35 ± 0.03	V	**35 VS V**
1.42	**1.50**	1.34	0.16	0.19	0.30	0.08	0.47	0.24 ± 0.03	R	**38 VA R**
		1.34	0.16	0.19	0.30	0.08	0.47	0.24 ± 0.03	V	**38 VA V**
		1.34	0.16	0.31	0.41	0.08	0.47	0.35 ± 0.03	R	**38 VS R**
		1.34	0.16	0.31	0.41	0.08	0.47	0.35 ± 0.03	V	**38 VS V**
1.50	**1.69**	1.42	0.20	0.22	0.35	0.08	0.59	0.28 ± 0.04	R	**40 VA R**
		1.42	0.20	0.22	0.35	0.08	0.59	0.28 ± 0.04	V	**40 VA V**
		1.42	0.20	0.37	0.51	0.08	0.59	0.43 ± 0.04	R	**40 VS R**
		1.42	0.20	0.37	0.51	0.08	0.59	0.43 ± 0.04	V	**40 VS V**
1.69	**1.89**	1.57	0.20	0.22	0.35	0.08	0.59	0.28 ± 0.04	R	**45 VA R**
		1.57	0.20	0.22	0.35	0.08	0.59	0.28 ± 0.04	V	**45 VA V**
		1.57	0.20	0.37	0.51	0.08	0.59	0.43 ± 0.04	R	**45 VS R**
		1.57	0.20	0.37	0.51	0.08	0.59	0.43 ± 0.04	V	**45 VS V**
1.89	**2.09**	1.77	0.20	0.22	0.35	0.08	0.59	0.28 ± 0.04	R	**50 VA R**
		1.77	0.20	0.22	0.35	0.08	0.59	0.28 ± 0.04	V	**50 VA V**
		1.77	0.20	0.37	0.51	0.08	0.59	0.43 ± 0.04	R	**50 VS R**
		1.77	0.20	0.37	0.51	0.08	0.59	0.43 ± 0.04	V	**50 VS V**
2.09	**2.28**	1.93	0.20	0.22	0.35	0.08	0.59	0.28 ± 0.04	R	**55 VA R**
		1.93	0.20	0.22	0.35	0.08	0.59	0.28 ± 0.04	V	**55 VA V**
		1.93	0.20	0.37	0.51	0.08	0.59	0.43 ± 0.04	R	**55 VS R**
		1.93	0.20	0.37	0.51	0.08	0.59	0.43 ± 0.04	V	**55 VS V**

d_1 **2.28–8.27** in

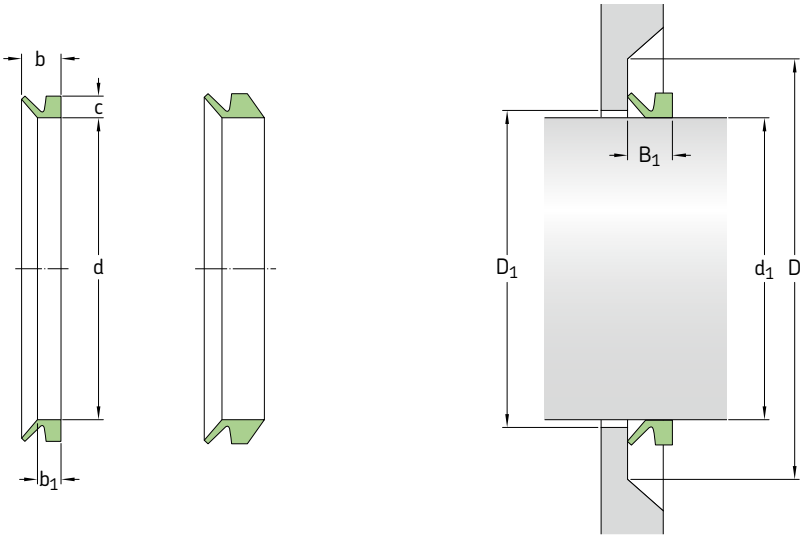

Dimensions									Lip code	Designation
Shaft diameter range d_1 over	incl.	Seal inside diameter, free state d	Nominal seal height c	Seal seat width b_1	Nominal seal width b	Clearance D_1 max.	Counterface D min.	Seal fitted width B_1		
in									–	–
2.28	**2.48**	2.13	0.20	0.22	0.35	0.08	0.59	0.28 ± 0.04	R	**60 VA R**
		2.13	0.20	0.22	0.35	0.08	0.59	0.28 ± 0.04	V	**60 VA V**
		2.13	0.20	0.37	0.51	0.08	0.59	0.43 ± 0.04	R	**60 VS R**
		2.13	0.20	0.37	0.51	0.08	0.59	0.43 ± 0.04	V	**60 VS V**
2.48	**2.68**	2.28	0.20	0.22	0.35	0.08	0.59	0.28 ± 0.04	R	**65 VA R**
		2.28	0.20	0.22	0.35	0.08	0.59	0.28 ± 0.04	V	**65 VA V**
		2.28	0.20	0.37	0.51	0.08	0.59	0.43 ± 0.04	R	**65 VS R**
		2.28	0.20	0.37	0.51	0.08	0.59	0.43 ± 0.04	V	**65 VS V**
2.68	**2.87**	2.48	0.24	0.27	0.43	0.12	0.71	0.35 ± 0.05	R	**70 VA R**
		2.48	0.24	0.27	0.43	0.12	0.71	0.35 ± 0.05	V	**70 VA V**
		2.48	0.24	0.44	0.61	0.12	0.71	0.53 ± 0.05	R	**70 VS R**
		2.48	0.24	0.44	0.61	0.12	0.71	0.53 ± 0.05	V	**70 VS V**
2.87	**3.07**	2.64	0.24	0.27	0.43	0.12	0.71	0.35 ± 0.05	R	**75 VA R**
		2.64	0.24	0.27	0.43	0.12	0.71	0.53 ± 0.05	R	**75 VS R**
		2.64	0.24	0.44	0.61	0.12	0.71	0.53 ± 0.05	V	**75 VS V**
3.07	**3.27**	2.83	0.24	0.27	0.43	0.12	0.71	0.35 ± 0.05	R	**80 VA R**
		2.83	0.24	0.27	0.43	0.12	0.71	0.35 ± 0.05	V	**80 VA V**
		2.83	0.24	0.44	0.61	0.12	0.71	0.53 ± 0.05	R	**80 VS R**
		2.83	0.24	0.44	0.61	0.12	0.71	0.53 ± 0.05	V	**80 VS V**
3.27	**3.46**	2.99	0.24	0.27	0.43	0.12	0.71	0.35 ± 0.05	R	**85 VA R**
		2.99	0.24	0.27	0.43	0.12	0.71	0.35 ± 0.05	V	**85 VA V**
		2.99	0.24	0.44	0.61	0.12	0.71	0.53 ± 0.05	R	**85 VS R**
		2.99	0.24	0.44	0.61	0.12	0.71	0.53 ± 0.05	V	**85 VS V**
3.46	**3.66**	3.19	0.24	0.27	0.43	0.12	0.71	0.35 ± 0.05	R	**90 VA R**
		3.19	0.24	0.27	0.43	0.12	0.71	0.35 ± 0.05	V	**90 VA V**
		3.19	0.24	0.44	0.61	0.12	0.71	0.53 ± 0.05	R	**90 VS R**
		3.19	0.24	0.44	0.61	0.12	0.71	0.53 ± 0.05	V	**90 VS V**
3.66	**3.86**	3.35	0.24	0.27	0.43	0.12	0.71	0.35 ± 0.05	R	**95 VA R**
		3.35	0.24	0.27	0.43	0.12	0.71	0.35 ± 0.05	V	**95 VA V**
		3.35	0.24	0.44	0.61	0.12	0.71	0.53 ± 0.05	R	**95 VS R**
		3.35	0.24	0.44	0.61	0.12	0.71	0.53 ± 0.05	V	**95 VS V**
3.86	**4.13**	3.54	0.24	0.27	0.43	0.12	0.71	0.35 ± 0.05	R	**100 VA R**
		3.54	0.24	0.27	0.43	0.12	0.71	0.35 ± 0.05	V	**100 VA V**
		3.54	0.24	0.44	0.61	0.12	0.71	0.53 ± 0.05	R	**100 VS R**
		3.54	0.24	0.44	0.61	0.12	0.71	0.53 ± 0.05	V	**100 VS V**

Dimensions Shaft diameter range d_1 over	incl.	Seal inside diameter, free state d	Nominal seal height c	Seal seat width b_1	Nominal seal width b	Clearance D_1 max.	Counterface D min.	Seal fitted width B_1	Lip code	Designation
in									–	–
4.13	**4.53**	3.90	0.26	0.24	0.41	0.20	0.79	0.31 ± 0.06	R	**110 VL R**
		3.90	0.26	0.24	0.41	0.20	0.79	0.31 ± 0.06	V	**110 VL V**
		3.90	0.28	0.31	0.50	0.16	0.83	0.41 ± 0.06	R	**110 VA R**
		3.90	0.28	0.31	0.50	0.16	0.83	0.41 ± 0.06	V	**110 VA V**
		3.90	0.28	0.52	0.71	0.16	0.83	0.61 ± 0.06	R	**110 VS R**
		3.90	0.28	0.52	0.71	0.16	0.83	0.61 ± 0.06	V	**110 VS V**
4.53	**4.92**	4.25	0.26	0.24	0.41	0.20	0.79	0.31 ± 0.06	R	**120 VL R**
		4.25	0.26	0.24	0.41	0.20	0.79	0.31 ± 0.06	V	**120 VL V**
		4.25	0.28	0.31	0.50	0.16	0.83	0.41 ± 0.06	R	**120 VA R**
		4.25	0.28	0.31	0.50	0.16	0.83	0.41 ± 0.06	V	**120 VA V**
		4.25	0.28	0.52	0.71	0.16	0.83	0.61 ± 0.06	R	**120 VS R**
		4.25	0.28	0.52	0.71	0.16	0.83	0.61 ± 0.06	V	**120 VS V**
4.92	**5.31**	4.61	0.26	0.24	0.41	0.20	0.79	0.31 ± 0.06	R	**130 VL R**
		4.61	0.26	0.24	0.41	0.20	0.79	0.31 ± 0.06	V	**130 VL V**
		4.61	0.28	0.31	0.50	0.16	0.83	0.41 ± 0.06	R	**130 VA R**
		4.61	0.28	0.31	0.50	0.16	0.83	0.41 ± 0.06	V	**130 VA V**
		4.61	0.28	0.52	0.71	0.16	0.83	0.61 ± 0.06	R	**130 VS R**
		4.61	0.28	0.52	0.71	0.16	0.83	0.61 ± 0.06	V	**130 VS V**
5.31	**5.71**	4.96	0.26	0.24	0.41	0.20	0.79	0.31 ± 0.06	R	**140 VL R**
		4.96	0.26	0.24	0.41	0.20	0.79	0.31 ± 0.06	V	**140 VL V**
		4.96	0.28	0.31	0.50	0.16	0.83	0.41 ± 0.06	R	**140 VA R**
		4.96	0.28	0.31	0.50	0.16	0.83	0.41 ± 0.06	V	**140 VA V**
		4.96	0.28	0.52	0.71	0.16	0.83	0.61 ± 0.06	R	**140 VS R**
		4.96	0.28	0.52	0.71	0.16	0.83	0.61 ± 0.06	V	**140 VS V**
5.71	**6.10**	5.31	0.26	0.24	0.41	0.20	0.79	0.31 ± 0.06	R	**150 VL R**
		5.31	0.26	0.24	0.41	0.20	0.79	0.31 ± 0.06	V	**150 VL V**
		5.31	0.28	0.31	0.50	0.16	0.83	0.41 ± 0.06	R	**150 VA R**
		5.31	0.28	0.31	0.50	0.16	0.83	0.41 ± 0.06	V	**150 VA V**
		5.31	0.28	0.52	0.71	0.16	0.83	0.61 ± 0.06	R	**150 VS R**
		5.31	0.28	0.52	0.71	0.16	0.83	0.61 ± 0.06	V	**150 VS V**
6.10	**6.50**	5.67	0.26	0.24	0.41	0.20	0.79	0.31 ± 0.06	R	**160 VL R**
		5.67	0.26	0.24	0.41	0.20	0.79	0.31 ± 0.06	V	**160 VL V**
		5.67	0.31	0.35	0.57	0.16	0.94	0.47 ± 0.07	R	**160 VA R**
		5.67	0.31	0.35	0.57	0.16	0.94	0.47 ± 0.07	V	**160 VA V**
		5.67	0.31	0.59	0.81	0.16	0.94	0.71 ± 0.07	R	**160 VS R**
		5.67	0.31	0.59	0.81	0.16	0.94	0.71 ± 0.07	V	**160 VS V**
6.50	**6.89**	6.02	0.26	0.24	0.41	0.20	0.79	0.31 ± 0.06	R	**170 VL R**
		6.02	0.26	0.24	0.41	0.20	0.79	0.31 ± 0.06	V	**170 VL V**
		6.02	0.31	0.35	0.57	0.16	0.94	0.47 ± 0.07	R	**170 VA R**
		6.02	0.31	0.35	0.57	0.16	0.94	0.47 ± 0.07	V	**170 VA V**
		6.02	0.31	0.59	0.81	0.16	0.94	0.71 ± 0.07	R	**170 VS R**
		6.02	0.31	0.59	0.81	0.16	0.94	0.71 ± 0.07	V	**170 VS V**
6.89	**7.28**	6.38	0.26	0.24	0.41	0.20	0.79	0.31 ± 0.06	R	**180 VL R**
		6.38	0.26	0.24	0.41	0.20	0.79	0.31 ± 0.06	V	**180 VL V**
		6.38	0.31	0.35	0.57	0.16	0.94	0.47 ± 0.07	R	**180 VA R**
		6.38	0.31	0.35	0.57	0.16	0.94	0.47 ± 0.07	V	**180 VA V**
		6.38	0.31	0.59	0.81	0.16	0.94	0.71 ± 0.07	R	**180 VS R**
		6.38	0.31	0.59	0.81	0.16	0.94	0.71 ± 0.07	V	**180 VS V**
7.28	**7.68**	6.73	0.26	0.24	0.41	0.20	0.79	0.31 ± 0.06	R	**190 VL R**
		6.73	0.26	0.24	0.41	0.20	0.79	0.31 ± 0.06	V	**190 VL V**
		6.73	0.31	0.35	0.57	0.16	0.94	0.47 ± 0.07	R	**190 VA R**
		6.73	0.31	0.35	0.57	0.16	0.94	0.47 ± 0.07	V	**190 VA V**
		6.73	0.31	0.59	0.81	0.16	0.94	0.71 ± 0.07	R	**190 VS R**
		6.73	0.31	0.59	0.81	0.16	0.94	0.71 ± 0.07	V	**190 VS V**
7.68	**8.27**	7.17	0.26	0.24	0.41	0.20	0.79	0.31 ± 0.06	R	**200 VL R**
		7.17	0.26	0.24	0.41	0.20	0.79	0.31 ± 0.06	V	**200 VL V**
		7.09	0.31	0.35	0.57	0.16	0.94	0.47 ± 0.07	R	**199 VA R**
		7.09	0.31	0.35	0.57	0.16	0.94	0.47 ± 0.07	V	**199 VA V**
		7.09	0.31	0.59	0.81	0.16	0.94	0.71 ± 0.07	R	**199 VS R**
		7.09	0.31	0.59	0.81	0.16	0.94	0.71 ± 0.07	V	**199 VS V**

d_1 **7.48–16.34** in

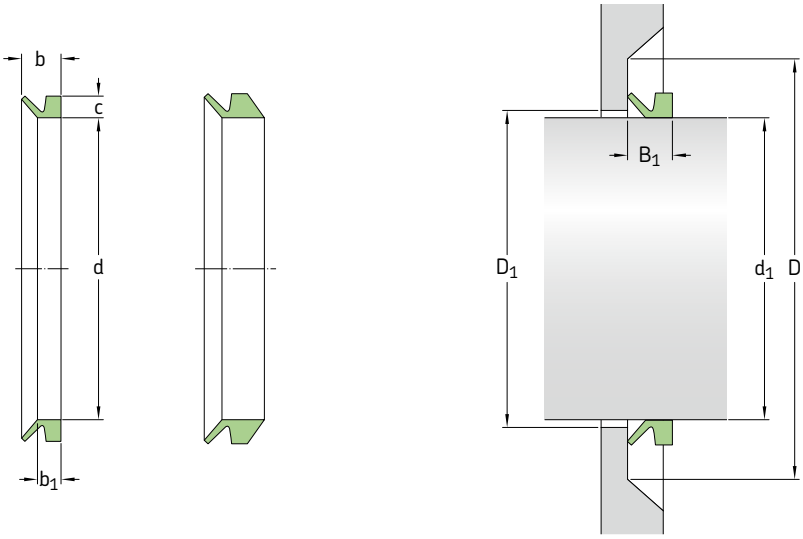

Dimensions									Lip code	Designation
Shaft diameter range d_1 over	incl.	Seal inside diameter, free state d	Nominal seal height c	Seal seat width b_1	Nominal seal width b	Clearance D_1 max.	Counterface D min.	Seal fitted width B_1		
in									–	–
7.48	**8.27**	7.09	0.59	0.56	0.98	0.39	1.77	0.79 ± 0.16	R	**200 VA R**
		7.09	0.59	0.56	0.98	0.39	1.77	0.79 ± 0.16	V	**200 VA V**
8.27	**9.17**	7.80	0.26	0.24	0.41	0.20	0.79	0.31 ± 0.06	R	**220 VL R**
		7.80	0.26	0.24	0.41	0.20	0.79	0.31 ± 0.06	V	**220 VL V**
		7.80	0.59	0.56	0.98	0.39	1.77	0.79 ± 0.16	R	**220 VA R**
		7.80	0.59	0.56	0.98	0.39	1.77	0.79 ± 0.16	V	**220 VA V**
9.17	**10.24**	8.86	0.26	0.24	0.41	0.20	0.79	0.31 ± 0.06	R	**250 VL R**
		8.86	0.26	0.24	0.41	0.20	0.79	0.31 ± 0.06	V	**250 VL V**
9.25	**10.43**	8.86	0.59	0.56	0.98	0.39	1.77	0.79 ± 0.16	R	**250 VA R**
		8.86	0.59	0.56	0.98	0.39	1.77	0.79 ± 0.16	V	**250 VA V**
10.24	**11.22**	9.72	0.26	0.24	0.41	0.20	0.79	0.31 ± 0.06	R	**275 VL R**
		9.72	0.26	0.24	0.41	0.20	0.79	0.31 ± 0.06	V	**275 VL V**
10.43	**11.42**	9.72	0.59	0.56	0.98	0.39	1.77	0.79 ± 0.16	R	**275 VA R**
		9.72	0.59	0.56	0.98	0.39	1.77	0.79 ± 0.16	V	**275 VA V**
11.22	**12.20**	10.63	0.26	0.24	0.41	0.20	0.79	0.31 ± 0.06	R	**300 VL R**
		10.63	0.26	0.24	0.41	0.20	0.79	0.31 ± 0.06	V	**300 VL V**
11.42	**12.20**	10.63	0.59	0.56	0.98	0.39	1.77	0.79 ± 0.16	R	**300 VA R**
		10.63	0.59	0.56	0.98	0.39	1.77	0.79 ± 0.16	V	**300 VA V**
11.81	**12.01**	11.57	1.18	1.28	2.56	0.94	4.53	1.97 ± 0.47	R	**300 VE R**
		11.57	0.83	1.28	2.56	0.94	4.53	1.97 ± 0.47	R	**300 VRME R**
12.01	**12.20**	11.77	1.18	1.28	2.56	0.94	4.53	1.97 ± 0.47	R	**305 VE R**
		11.77	0.83	1.28	2.56	0.94	4.53	1.97 ± 0.47	R	**305 VRME R**
12.20	**13.19**	11.50	0.26	0.24	0.41	0.20	0.79	0.31 ± 0.06	R	**325 VL R**
		11.50	0.26	0.24	0.41	0.20	0.79	0.31 ± 0.06	V	**325 VL V**
		11.50	0.59	0.56	0.98	0.39	1.77	0.79 ± 0.16	R	**325 VA R**
12.20	**13.19**	11.50	0.59	0.56	0.98	0.39	1.77	0.79 ± 0.16	V	**325 VA V**
		11.97	1.18	1.28	2.56	0.94	4.53	1.97 ± 0.47	R	**310 VE R**
		11.97	0.83	1.28	2.56	0.94	4.53	1.97 ± 0.47	R	**310 VRME R**
12.40	**12.60**	12.17	1.18	1.28	2.56	0.94	4.53	1.97 ± 0.47	R	**315 VE R**
		12.17	0.83	1.28	2.56	0.94	4.53	1.97 ± 0.47	R	**315 VRME R**
12.60	**12.80**	12.36	1.18	1.28	2.56	0.94	4.53	1.97 ± 0.47	R	**320 VE R**
		12.36	0.83	1.28	2.56	0.94	4.53	1.97 ± 0.47	R	**320 VRME R**

Dimensions Shaft diameter range d_1 over	incl.	Seal inside diameter, free state d	Nominal seal height c	Seal seat width b_1	Nominal seal width b	Clearance D_1 max.	Counterface D min.	Seal fitted width B_1	Lip code	Designation
in									–	–
12.80	**12.99**	12.56	1.18	1.28	2.56	0.94	4.53	1.97 ± 0.47	R	**325 VE R**
		12.56	0.83	1.28	2.56	0.94	4.53	1.97 ± 0.47	R	**325 VRME R**
12.99	**13.19**	12.72	1.18	1.28	2.56	0.94	4.53	1.97 ± 0.47	R	**330 VE R**
		12.72	0.83	1.28	2.56	0.94	4.53	1.97 ± 0.47	R	**330 VRME R**
13.19	**14.37**	12.40	0.26	0.24	0.41	0.20	0.79	0.31 ± 0.06	R	**350 VL R**
		12.40	0.26	0.24	0.41	0.20	0.79	0.31 ± 0.06	V	**350 VL V**
		12.40	0.59	0.56	0.98	0.39	1.77	0.79 ± 0.16	R	**350 VA R**
		12.40	0.59	0.56	0.98	0.39	1.77	0.79 ± 0.16	V	**350 VA V**
13.19	**13.39**	12.91	1.18	1.28	2.56	0.94	4.53	1.97 ± 0.47	R	**335 VE R**
		12.91	0.83	1.28	2.56	0.94	4.53	1.97 ± 0.47	R	**335 VRME R**
13.39	**13.58**	13.11	1.18	1.28	2.56	0.94	4.53	1.97 ± 0.47	R	**340 VE R**
		12.91	0.83	1.28	2.56	0.94	4.53	1.97 ± 0.47	R	**340 VRME R**
13.58	**13.78**	13.31	1.18	1.28	2.56	0.94	4.53	1.97 ± 0.47	R	**345 VE R**
		13.31	0.83	1.28	2.56	0.94	4.53	1.97 ± 0.47	R	**345 VRME R**
13.78	**13.98**	13.50	1.18	1.28	2.56	0.94	4.53	1.97 ± 0.47	R	**350 VE R**
		13.50	0.83	1.28	2.56	0.94	4.53	1.97 ± 0.47	R	**350 VRME R**
13.98	**14.17**	13.66	1.18	1.28	2.56	0.94	4.53	1.97 ± 0.47	R	**355 VE R**
		13.66	0.83	1.28	2.56	0.94	4.53	1.97 ± 0.47	R	**355 VRME R**
14.17	**14.37**	13.86	1.18	1.28	2.56	0.94	4.53	1.97 ± 0.47	R	**360 VE R**
		14.06	0.83	1.28	2.56	0.94	4.53	1.97 ± 0.47	R	**360 VRME R**
14.37	**15.16**	13.27	0.26	0.24	0.41	0.20	0.79	0.31 ± 0.06	R	**375 VL R**
		13.27	0.26	0.24	0.41	0.20	0.79	0.31 ± 0.06	V	**375 VL V**
14.37	**15.35**	13.27	0.59	0.56	0.98	0.39	1.77	0.79 ± 0.16	R	**375 VA R**
		13.27	0.59	0.56	0.98	0.39	1.77	0.79 ± 0.16	V	**375 VA V**
14.37	**14.57**	14.06	1.18	1.28	2.56	0.94	4.53	1.97 ± 0.47	R	**365 VE R**
14.57	**14.76**	14.25	1.18	1.28	2.56	0.94	4.53	1.97 ± 0.47	R	**370 VE R**
		14.25	0.83	1.28	2.56	0.94	4.53	1.97 ± 0.47	R	**370 VRME R**
14.76	**14.96**	14.45	1.18	1.28	2.56	0.94	4.53	1.97 ± 0.47	R	**375 VE R**
		14.45	0.83	1.28	2.56	0.94	4.53	1.97 ± 0.47	R	**375 VRME R**
14.96	**15.16**	14.61	1.18	1.28	2.56	0.94	4.53	1.97 ± 0.47	R	**380 VE R**
		14.61	0.83	1.28	2.56	0.94	4.53	1.97 ± 0.47	R	**380 VRME R**
15.16	**16.14**	14.17	0.26	0.24	0.41	0.20	0.79	0.31 ± 0.06	R	**400 VL R**
		14.17	0.26	0.24	0.41	0.20	0.79	0.31 ± 0.06	V	**400 VL V**
15.35	**16.93**	14.17	0.59	0.56	0.98	0.39	1.77	0.79 ± 0.16	R	**400 VA R**
		14.17	0.59	0.56	0.98	0.39	1.77	0.79 ± 0.16	V	**400 VA V**
15.16	**15.35**	14.80	1.18	1.28	2.56	0.94	4.53	1.97 ± 0.47	R	**385 VE R**
		14.80	0.83	1.28	2.56	0.94	4.53	1.97 ± 0.47	R	**385 VRME R**
15.35	**15.55**	15.00	1.18	1.28	2.56	0.94	4.53	1.97 ± 0.47	R	**390 VE R**
		15.00	0.83	1.28	2.56	0.94	4.53	1.97 ± 0.47	R	**390 VRME R**
15.55	**15.75**	15.20	1.18	1.28	2.56	0.94	4.53	1.97 ± 0.47	R	**395 VE R**
		15.20	0.83	1.28	2.56	0.94	4.53	1.97 ± 0.47	R	**395 VRME R**
15.75	**15.94**	15.39	1.18	1.28	2.56	0.94	4.53	1.97 ± 0.47	R	**400 VE R**
		15.39	0.83	1.28	2.56	0.94	4.53	1.97 ± 0.47	R	**400 VRME R**
15.94	**16.14**	15.59	1.18	1.28	2.56	0.94	4.53	1.97 ± 0.47	R	**405 VE R**
		15.59	0.83	1.28	2.56	0.94	4.53	1.97 ± 0.47	R	**405 VRME R**
16.14	**16.34**	15.79	1.18	1.28	2.56	0.94	4.53	1.97 ± 0.47	R	**410 VE R**
		15.79	0.83	1.28	2.56	0.94	4.53	1.97 ± 0.47	R	**410 VRME R**

d_1 **16.34–22.24** in

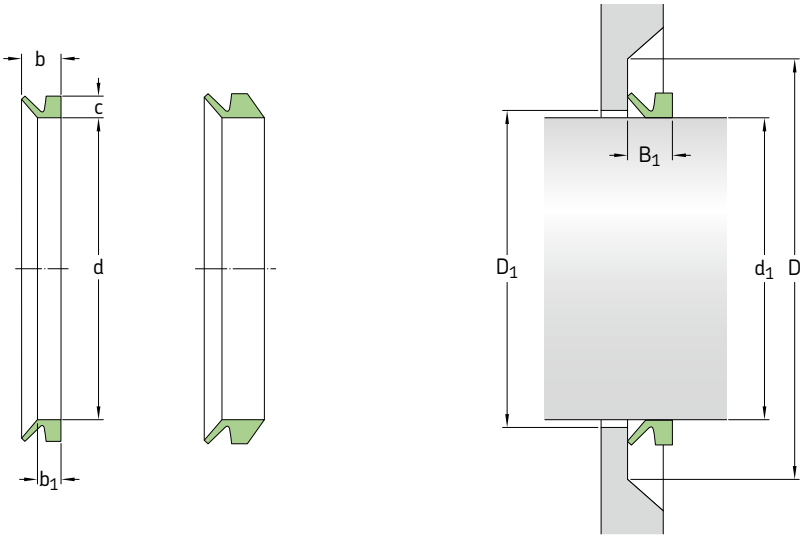

Dimensions Shaft diameter range d_1 over	incl.	Seal inside diameter, free state d	Nominal seal height c	Seal seat width b_1	Nominal seal width b	Clearance D_1 max.	Counterface D min.	Seal fitted width B_1	Lip code	Designation
in									–	–
16.34	**16.54**	15.94	1.18	1.28	2.56	0.94	4.53	1.97 ± 0.47	R	**415 VE R**
		15.94	0.83	1.28	2.56	0.94	4.53	1.97 ± 0.47	R	**415 VRME R**
16.54	**16.73**	16.14	1.18	1.28	2.56	0.94	4.53	1.97 ± 0.47	R	**420 VE R**
		16.14	0.83	1.28	2.56	0.94	4.53	1.97 ± 0.47	R	**420 VRME R**
16.73	**16.93**	16.34	1.18	1.28	2.56	0.94	4.53	1.97 ± 0.47	R	**425 VE R**
		16.34	0.83	1.28	2.56	0.94	4.53	1.97 ± 0.47	R	**425 VRME R**
16.14	**17.32**	15.04	0.26	0.24	0.41	0.20	0.79	0.31 ± 0.06	R	**425 VL R**
		15.04	0.26	0.24	0.41	0.20	0.79	0.31 ± 0.06	V	**425 VL V**
17.32	**18.70**	15.94	0.26	0.24	0.41	0.20	0.79	0.31 ± 0.06	R	**450 VL R**
		15.94	0.26	0.24	0.41	0.20	0.79	0.31 ± 0.06	V	**450 VL V**
16.93	**18.90**	15.94	0.59	0.56	0.98	0.39	1.77	0.79 ± 0.16	R	**450 VA R**
		15.94	0.59	0.56	0.98	0.39	1.77	0.79 ± 0.16	V	**450 VA V**
16.93	**17.13**	16.54	1.18	1.28	2.56	0.94	4.53	1.97 ± 0.47	R	**430 VE R**
		16.54	0.83	1.28	2.56	0.94	4.53	1.97 ± 0.47	R	**430 VRME R**
17.13	**17.32**	16.73	1.18	1.28	2.56	0.94	4.53	1.97 ± 0.47	R	**435 VE R**
		16.73	0.83	1.28	2.56	0.94	4.53	1.97 ± 0.47	R	**435 VRME R**
17.32	**17.52**	16.89	1.18	1.28	2.56	0.94	4.53	1.97 ± 0.47	R	**440 VE R**
		16.89	0.83	1.28	2.56	0.94	4.53	1.97 ± 0.47	R	**440 VRME R**
17.52	**17.72**	17.09	1.18	1.28	2.56	0.94	4.53	1.97 ± 0.47	R	**445 VE R**
		17.09	0.83	1.28	2.56	0.94	4.53	1.97 ± 0.47	R	**445 VRME R**
17.72	**17.91**	17.28	1.18	1.28	2.56	0.94	4.53	1.97 ± 0.47	R	**450 VE R**
		17.28	0.83	1.28	2.56	0.94	4.53	1.97 ± 0.47	R	**450 VRME R**
17.91	**18.11**	17.48	1.18	1.28	2.56	0.94	4.53	1.97 ± 0.47	R	**455 VE R**
		17.48	0.83	1.28	2.56	0.94	4.53	1.97 ± 0.47	R	**455 VRME R**
18.11	**18.31**	17.64	1.18	1.28	2.56	0.94	4.53	1.97 ± 0.47	R	**460 VE R**
		17.64	0.83	1.28	2.56	0.94	4.53	1.97 ± 0.47	R	**460 VRME R**
18.31	**18.50**	17.83	1.18	1.28	2.56	0.94	4.53	1.97 ± 0.47	R	**465 VE R**
		17.83	0.83	1.28	2.56	0.94	4.53	1.97 ± 0.47	R	**465 VRME R**
18.50	**18.70**	18.03	1.18	1.28	2.56	0.94	4.53	1.97 ± 0.47	R	**470 VE R**
		18.03	0.83	1.28	2.56	0.94	4.53	1.97 ± 0.47	R	**470 VRME R**

Dimensions Shaft diameter range d_1 over	incl.	Seal inside diameter, free state d	Nominal seal height c	Seal seat width b_1	Nominal seal width b	Clearance D_1 max.	Counterface D min.	Seal fitted width B_1	Lip code	Designation
in									–	–
18.70	**18.90**	18.23	1.18	1.28	2.56	0.94	4.53	1.97 ± 0.47	R	**475 VE R**
		18.23	0.83	1.28	2.56	0.94	4.53	1.97 ± 0.47	R	**475 VRME R**
18.70	**20.08**	17.72	0.26	0.24	0.41	0.20	0.79	0.31 ± 0.06	R	**500 VL R**
		17.72	0.26	0.24	0.41	0.20	0.79	0.31 ± 0.06	V	**500 VL V**
20.08	**21.26**	18.58	0.26	0.24	0.41	0.20	0.79	0.31 ± 0.06	R	**525 VL R**
		18.58	0.26	0.24	0.41	0.20	0.79	0.31 ± 0.06	V	**525 VL V**
18.90	**20.87**	17.72	0.59	0.56	0.98	0.39	1.77	0.79 ± 0.16	R	**500 VA R**
		17.72	0.59	0.56	0.98	0.39	1.77	0.79 ± 0.16	V	**500 VA V**
18.90	**19.09**	18.43	1.18	1.28	2.56	0.94	4.53	1.97 ± 0.47	R	**480 VE R**
		18.43	0.83	1.28	2.56	0.94	4.53	1.97 ± 0.47	R	**480 VRME R**
19.09	**19.29**	18.62	1.18	1.28	2.56	0.94	4.53	1.97 ± 0.47	R	**485 VE R**
		18.62	0.83	1.28	2.56	0.94	4.53	1.97 ± 0.47	R	**485 VRME R**
19.29	**19.49**	18.82	1.18	1.28	2.56	0.94	4.53	1.97 ± 0.47	R	**490 VE R**
		18.82	0.83	1.28	2.56	0.94	4.53	1.97 ± 0.47	R	**490 VRME R**
19.49	**19.69**	19.02	1.18	1.28	2.56	0.94	4.53	1.97 ± 0.47	R	**495 VE R**
		19.02	0.83	1.28	2.56	0.94	4.53	1.97 ± 0.47	R	**495 VRME R**
19.69	**19.88**	19.21	1.18	1.28	2.56	0.94	4.53	1.97 ± 0.47	R	**500 VE R**
		19.21	0.83	1.28	2.56	0.94	4.53	1.97 ± 0.47	R	**500 VRME R**
19.88	**20.08**	19.41	1.18	1.28	2.56	0.94	4.53	1.97 ± 0.47	R	**505 VE R**
		19.41	0.83	1.28	2.56	0.94	4.53	1.97 ± 0.47	R	**505 VRME R**
20.08	**20.28**	19.57	1.18	1.28	2.56	0.94	4.53	1.97 ± 0.47	R	**510 VE R**
		19.57	0.83	1.28	2.56	0.94	4.53	1.97 ± 0.47	R	**510 VRME R**
20.28	**20.47**	19.76	1.18	1.28	2.56	0.94	4.53	1.97 ± 0.47	R	**515 VE R**
		19.76	0.83	1.28	2.56	0.94	4.53	1.97 ± 0.47	R	**515 VRME R**
20.47	**20.67**	19.96	1.18	1.28	2.56	0.94	4.53	1.97 ± 0.47	R	**520 VE R**
		19.96	0.83	1.28	2.56	0.94	4.53	1.97 ± 0.47	R	**520 VRME R**
20.67	**20.87**	20.16	1.18	1.28	2.56	0.94	4.53	1.97 ± 0.47	R	**525 VE R**
		20.16	0.83	1.28	2.56	0.94	4.53	1.97 ± 0.47	R	**525 VRME R**
21.26	**22.64**	19.49	0.26	0.24	0.41	0.20	0.79	0.31 ± 0.06	R	**550 VL R**
		19.49	0.26	0.24	0.41	0.20	0.79	0.31 ± 0.06	V	**550 VL V**
20.87	**22.83**	19.49	0.59	0.56	0.98	0.39	1.77	0.79 ± 0.16	R	**550 VA R**
		19.49	0.59	0.56	0.98	0.39	1.77	0.79 ± 0.16	V	**550 VA V**
20.87	**21.06**	20.35	1.18	1.28	2.56	0.94	4.53	1.97 ± 0.47	R	**530 VE R**
		20.35	0.83	1.28	2.56	0.94	4.53	1.97 ± 0.47	R	**530 VRME R**
21.06	**21.26**	20.51	1.18	1.28	2.56	0.94	4.53	1.97 ± 0.47	R	**535 VE R**
		20.51	0.83	1.28	2.56	0.94	4.53	1.97 ± 0.47	R	**535 VRME R**
21.26	**21.46**	20.71	1.18	1.28	2.56	0.94	4.53	1.97 ± 0.47	R	**540 VE R**
		20.71	0.83	1.28	2.56	0.94	4.53	1.97 ± 0.47	R	**540 VRME R**
21.46	**21.65**	20.91	1.18	1.28	2.56	0.94	4.53	1.97 ± 0.47	R	**545 VE R**
		20.91	0.83	1.28	2.56	0.94	4.53	1.97 ± 0.47	R	**545 VRME R**
21.65	**21.85**	21.10	1.18	1.28	2.56	0.94	4.53	1.97 ± 0.47	R	**550 VE R**
		21.10	0.83	1.28	2.56	0.94	4.53	1.97 ± 0.47	R	**550 VRME R**
21.85	**22.05**	21.30	1.18	1.28	2.56	0.94	4.53	1.97 ± 0.47	R	**555 VE R**
		21.30	0.83	1.28	2.56	0.94	4.53	1.97 ± 0.47	R	**555 VRME R**
22.05	**22.24**	21.50	1.18	1.28	2.56	0.94	4.53	1.97 ± 0.47	R	**560 VE R**
		21.50	0.83	1.28	2.56	0.94	4.53	1.97 ± 0.47	R	**560 VRME R**

d_1 **22.24–32.68** in

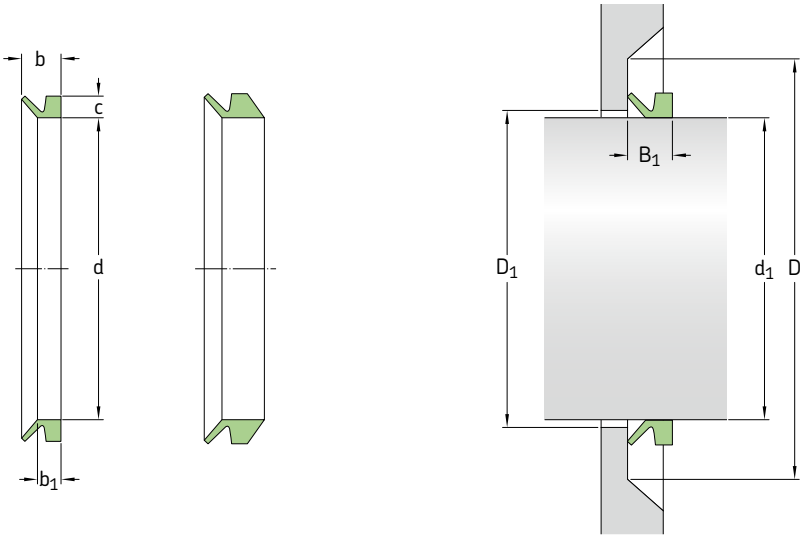

Dimensions Shaft diameter range d_1 over	incl.	Seal inside diameter, free state d	Nominal seal height c	Seal seat width b_1	Nominal seal width b	Clearance D_1 max.	Counterface D min.	Seal fitted width B_1	Lip code	Designation
in									–	–
22.24	**22.44**	21.65	1.18	1.28	2.56	0.94	4.53	1.97 ± 0.47	R	**565 VE R**
		21.65	0.83	1.28	2.56	0.94	4.53	1.97 ± 0.47	R	**565 VRME R**
22.44	**22.64**	21.85	1.18	1.28	2.56	0.94	4.53	1.97 ± 0.47	R	**570 VE R**
		21.85	0.83	1.28	2.56	0.94	4.53	1.97 ± 0.47	R	**570 VRME R**
22.64	**22.83**	22.05	1.18	1.28	2.56	0.94	4.53	1.97 ± 0.47	R	**575 VE R**
		22.05	0.83	1.28	2.56	0.94	4.53	1.97 ± 0.47	R	**575 VRME R**
22.64	**24.61**	21.26	0.26	0.24	0.41	0.20	0.79	0.31 ± 0.06	R	**600 VL R**
		21.26	0.26	0.24	0.41	0.20	0.79	0.31 ± 0.06	V	**600 VL V**
22.83	**24.80**	21.26	0.59	0.56	0.98	0.39	1.77	0.79 ± 0.16	R	**600 VA R**
		21.26	0.59	0.56	0.98	0.39	1.77	0.79 ± 0.16	V	**600 VA V**
22.83	**23.03**	22.24	1.18	1.28	2.56	0.94	4.53	1.97 ± 0.47	R	**580 VE R**
		22.24	0.83	1.28	2.56	0.94	4.53	1.97 ± 0.47	R	**580 VRME R**
23.03	**23.23**	22.44	1.18	1.28	2.56	0.94	4.53	1.97 ± 0.47	R	**585 VE R**
		22.44	0.83	1.28	2.56	0.94	4.53	1.97 ± 0.47	R	**585 VRME R**
23.23	**23.62**	22.64	1.18	1.28	2.56	0.94	4.53	1.97 ± 0.47	R	**590 VE R**
		22.64	0.83	1.28	2.56	0.94	4.53	1.97 ± 0.47	R	**590 VRME R**
23.62	**24.02**	22.91	1.18	1.28	2.56	0.94	4.53	1.97 ± 0.47	R	**600 VE R**
		22.91	0.83	1.28	2.56	0.94	4.53	1.97 ± 0.47	R	**600 VRME R**
24.02	**24.41**	23.31	1.18	1.28	2.56	0.94	4.53	1.97 ± 0.47	R	**610 VE R**
		23.31	0.83	1.28	2.56	0.94	4.53	1.97 ± 0.47	R	**610 VRME R**
24.41	**24.80**	23.70	1.18	1.28	2.56	0.94	4.53	1.97 ± 0.47	R	**620 VE R**
		23.70	0.83	1.28	2.56	0.94	4.53	1.97 ± 0.47	R	**620 VRME R**
24.21	**26.57**	23.62	0.26	0.24	0.41	0.20	0.79	0.31 ± 0.06	R	**650 VL R**
		23.62	0.26	0.24	0.41	0.20	0.79	0.31 ± 0.06	V	**650 VL V**
24.80	**26.18**	23.62	0.59	0.56	0.98	0.39	1.77	0.79 ± 0.16	R	**650 VA R**
		23.62	0.59	0.56	0.98	0.39	1.77	0.79 ± 0.16	V	**650 VA V**
24.80	**25.20**	24.09	1.18	1.28	2.56	0.94	4.53	1.97 ± 0.47	R	**630 VE R**
		24.09	0.83	1.28	2.56	0.94	4.53	1.97 ± 0.47	R	**630 VRME R**
25.20	**25.59**	24.45	1.18	1.28	2.56	0.94	4.53	1.97 ± 0.47	R	**640 VE R**
		24.45	0.83	1.28	2.56	0.94	4.53	1.97 ± 0.47	R	**640 VRME R**

Dimensions Shaft diameter range d_1 over	incl.	Seal inside diameter, free state d	Nominal seal height c	Seal seat width b_1	Nominal seal width b	Clearance D_1 max.	Counterface D min.	Seal fitted width B_1	Lip code	Designation
in									–	–
25.59	**25.98**	24.84	1.18	1.28	2.56	0.94	4.53	1.97 ± 0.47	R	**650 VE R**
		24.84	0.83	1.28	2.56	0.94	4.53	1.97 ± 0.47	R	**650 VRME R**
25.98	**26.38**	25.20	1.18	1.28	2.56	0.94	4.53	1.97 ± 0.47	R	**660 VE R**
		25.20	0.83	1.28	2.56	0.94	4.53	1.97 ± 0.47	R	**660 VRME R**
26.57	**27.95**	24.80	0.26	0.24	0.41	0.20	0.79	0.31 ± 0.06	R	**700 VL R**
		24.80	0.26	0.24	0.41	0.20	0.79	0.31 ± 0.06	V	**700 VL V**
26.18	**27.76**	24.80	0.59	0.56	0.98	0.39	1.77	0.79 ± 0.16	R	**700 VA R**
		24.80	0.59	0.56	0.98	0.39	1.77	0.79 ± 0.16	V	**700 VA V**
26.38	**26.77**	25.59	1.18	1.28	2.56	0.94	4.53	1.97 ± 0.47	R	**670 VE R**
		25.59	0.83	1.28	2.56	0.94	4.53	1.97 ± 0.47	R	**670 VRME R**
26.77	**27.17**	25.98	1.18	1.28	2.56	0.94	4.53	1.97 ± 0.47	R	**680 VE R**
		25.98	0.83	1.28	2.56	0.94	4.53	1.97 ± 0.47	R	**680 VRME R**
27.17	**27.56**	26.38	1.18	1.28	2.56	0.94	4.53	1.97 ± 0.47	R	**690 VE R**
		26.38	0.83	1.28	2.56	0.94	4.53	1.97 ± 0.47	R	**690 VRME R**
27.56	**27.95**	26.77	1.18	1.28	2.56	0.94	4.53	1.97 ± 0.47	R	**700 VE R**
		26.77	0.83	1.28	2.56	0.94	4.53	1.97 ± 0.47	R	**700 VRME R**
27.95	**29.13**	26.38	0.26	0.24	0.41	0.20	0.79	0.31 ± 0.06	R	**725 VL R**
		26.38	0.26	0.24	0.41	0.20	0.79	0.31 ± 0.06	V	**725 VL V**
27.76	**29.33**	26.38	0.59	0.56	0.98	0.39	1.77	0.79 ± 0.16	R	**725 VA R**
		26.38	0.59	0.56	0.98	0.39	1.77	0.79 ± 0.16	V	**725 VA V**
27.95	**28.35**	27.13	1.18	1.28	2.56	0.94	4.53	1.97 ± 0.47	R	**710 VE R**
		27.13	0.83	1.28	2.56	0.94	4.53	1.97 ± 0.47	R	**710 VRME R**
28.35	**28.74**	27.52	1.18	1.28	2.56	0.94	4.53	1.97 ± 0.47	R	**720 VE R**
		27.52	0.83	1.28	2.56	0.94	4.53	1.97 ± 0.47	R	**720 VRME R**
28.74	**29.13**	27.91	1.18	1.28	2.56	0.94	4.53	1.97 ± 0.47	R	**730 VE R**
		27.91	0.83	1.28	2.56	0.94	4.53	1.97 ± 0.47	R	**730 VRME R**
29.13	**29.53**	28.27	1.18	1.28	2.56	0.94	4.53	1.97 ± 0.47	R	**740 VE R**
		28.27	0.83	1.28	2.56	0.94	4.53	1.97 ± 0.47	R	**740 VRME R**
29.13	**30.51**	27.76	0.26	0.24	0.41	0.20	0.79	0.31 ± 0.06	R	**750 VL R**
		27.76	0.26	0.24	0.41	0.20	0.79	0.31 ± 0.06	V	**750 VL V**
29.33	**30.91**	27.76	0.59	0.56	0.98	0.39	1.77	0.79 ± 0.16	R	**750 VA R**
		27.76	0.59	0.56	0.98	0.39	1.77	0.79 ± 0.16	V	**750 VA V**
29.53	**29.84**	28.66	1.18	1.28	2.56	0.94	4.53	1.97 ± 0.47	R	**750 VE R**
		28.66	0.83	1.28	2.56	0.94	4.53	1.97 ± 0.47	R	**750 VRME R**
29.84	**30.16**	28.94	1.18	1.28	2.56	0.94	4.53	1.97 ± 0.47	R	**760 VE R**
		28.94	0.83	1.28	2.56	0.94	4.53	1.97 ± 0.47	R	**760 VRME R**
30.16	**30.47**	29.25	1.18	1.28	2.56	0.94	4.53	1.97 ± 0.47	R	**770 VE R**
		29.25	0.83	1.28	2.56	0.94	4.53	1.97 ± 0.47	R	**770 VRME R**
30.47	**30.83**	29.57	1.18	1.28	2.56	0.94	4.53	1.97 ± 0.47	R	**780 VE R**
		29.57	0.83	1.28	2.56	0.94	4.53	1.97 ± 0.47	R	**780 VRME R**
30.83	**31.18**	29.88	1.18	1.28	2.56	0.94	4.53	1.97 ± 0.47	R	**790 VE R**
		29.88	0.83	1.28	2.56	0.94	4.53	1.97 ± 0.47	R	**790 VRME R**
30.51	**32.48**	29.33	0.26	0.24	0.41	0.20	0.79	0.31 ± 0.06	R	**800 VL R**
		29.33	0.26	0.24	0.41	0.20	0.79	0.31 ± 0.06	V	**800 VL V**
30.91	**32.68**	29.33	0.59	0.56	0.98	0.39	1.77	0.79 ± 0.16	R	**800 VA R**
		29.33	0.59	0.56	0.98	0.39	1.77	0.79 ± 0.16	V	**800 VA V**

d_1 **31.18–46.26** in

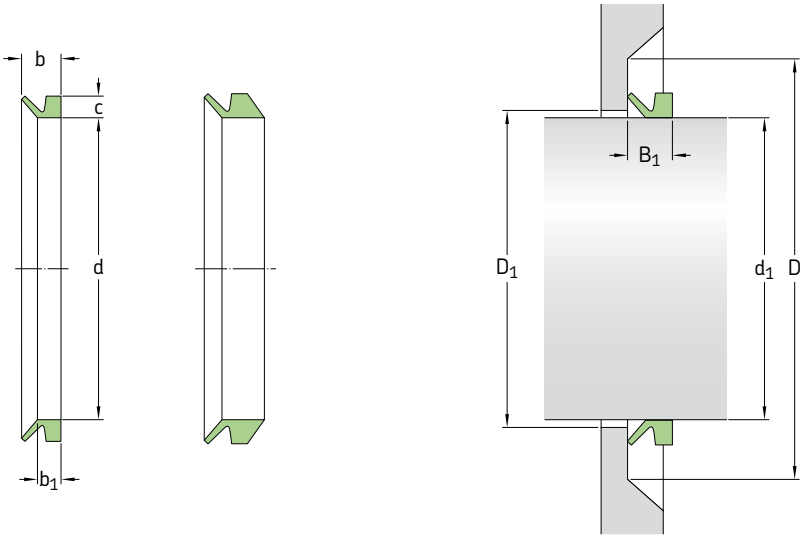

Dimensions Shaft diameter range d_1 over	incl.	Seal inside diameter, free state d	Nominal seal height c	Seal seat width b_1	Nominal seal width b	Clearance D_1 max.	Counterface D min.	Seal fitted width B_1	Lip code	Designation
in									–	–
31.18	**31.54**	30.24	1.18	1.28	2.56	0.94	4.53	1.97 ± 0.47	R	**800 VE R**
		30.24	0.83	1.28	2.56	0.94	4.53	1.97 ± 0.47	R	**800 VRME R**
31.54	**31.89**	30.59	1.18	1.28	2.56	0.94	4.53	1.97 ± 0.47	R	**810 VE R**
		30.59	0.83	1.28	2.56	0.94	4.53	1.97 ± 0.47	R	**810 VRME R**
31.89	**32.32**	30.94	1.18	1.28	2.56	0.94	4.53	1.97 ± 0.47	R	**820 VE R**
		30.94	0.83	1.28	2.56	0.94	4.53	1.97 ± 0.47	R	**820 VRME R**
32.32	**32.72**	31.34	1.18	1.28	2.56	0.94	4.53	1.97 ± 0.47	R	**830 VE R**
		31.34	0.83	1.28	2.56	0.94	4.53	1.97 ± 0.47	R	**830 VRME R**
32.48	**34.45**	30.91	0.26	0.24	0.41	0.20	0.79	0.31 ± 0.06	R	**850 VL R**
		30.91	0.26	0.24	0.41	0.20	0.79	0.31 ± 0.06	V	**850 VL V**
32.68	**34.45**	30.91	0.59	0.56	0.98	0.39	1.77	0.79 ± 0.16	R	**850 VA R**
		30.91	0.59	0.56	0.98	0.39	1.77	0.79 ± 0.16	V	**850 VA V**
32.72	**33.11**	31.69	1.18	1.28	2.56	0.94	4.53	1.97 ± 0.47	R	**840 VE R**
		31.69	0.83	1.28	2.56	0.94	4.53	1.97 ± 0.47	R	**840 VRME R**
33.11	**33.50**	32.05	1.18	1.28	2.56	0.94	4.53	1.97 ± 0.47	R	**850 VE R**
		32.05	0.83	1.28	2.56	0.94	4.53	1.97 ± 0.47	R	**850 VRME R**
33.50	**33.90**	32.44	1.18	1.28	2.56	0.94	4.53	1.97 ± 0.47	R	**860 VE R**
		32.44	0.83	1.28	2.56	0.94	4.53	1.97 ± 0.47	R	**860 VRME R**
33.90	**34.29**	32.80	1.18	1.28	2.56	0.94	4.53	1.97 ± 0.47	R	**870 VE R**
		32.80	0.83	1.28	2.56	0.94	4.53	1.97 ± 0.47	R	**870 VRME R**
34.29	**34.72**	33.19	1.18	1.28	2.56	0.94	4.53	1.97 ± 0.47	R	**880 VE R**
		33.19	0.83	1.28	2.56	0.94	4.53	1.97 ± 0.47	R	**880 VRME R**
34.45	**36.42**	32.48	0.26	0.24	0.41	0.20	0.79	0.31 ± 0.06	R	**900 VL R**
		32.48	0.26	0.24	0.41	0.20	0.79	0.31 ± 0.06	V	**900 VL V**
34.45	**36.22**	32.48	0.59	0.56	0.98	0.39	1.77	0.79 ± 0.16	R	**900 VA R**
		32.48	0.59	0.56	0.98	0.39	1.77	0.79 ± 0.16	V	**900 VA V**
34.72	**35.12**	33.58	1.18	1.28	2.56	0.94	4.53	1.97 ± 0.47	R	**890 VE R**
		33.58	0.83	1.28	2.56	0.94	4.53	1.97 ± 0.47	R	**890 VRME R**
35.12	**35.91**	34.29	1.18	1.28	2.56	0.94	4.53	1.97 ± 0.47	R	**900 VE R**
		34.29	0.83	1.28	2.56	0.94	4.53	1.97 ± 0.47	R	**900 VRME R**

Dimensions Shaft diameter range d_1 over	incl.	Seal inside diameter, free state d	Nominal seal height c	Seal seat width b_1	Nominal seal width b	Clearance D_1 max.	Counterface D min.	Seal fitted width B_1	Lip code	Designation
in									–	–
35.91	**36.30**	34.65	1.18	1.28	2.56	0.94	4.53	1.97 ± 0.47	R	**920 VE R**
		34.65	0.83	1.28	2.56	0.94	4.53	1.97 ± 0.47	R	**920 VRME R**
36.42	**38.39**	34.06	0.26	0.24	0.41	0.20	0.79	0.31 ± 0.06	R	**950 VL R**
		34.06	0.26	0.24	0.41	0.20	0.79	0.31 ± 0.06	V	**950 VL V**
36.22	**37.99**	34.06	0.59	0.56	0.98	0.39	1.77	0.79 ± 0.16	R	**950 VA R**
		34.06	0.59	0.56	0.98	0.39	1.77	0.79 ± 0.16	V	**950 VA V**
36.30	**36.73**	35.04	1.18	1.28	2.56	0.94	4.53	1.97 ± 0.47	R	**930 VE R**
		35.04	0.83	1.28	2.56	0.94	4.53	1.97 ± 0.47	R	**930 VRME R**
36.73	**37.17**	35.43	1.18	1.28	2.56	0.94	4.53	1.97 ± 0.47	R	**940 VE R**
		35.43	0.83	1.28	2.56	0.94	4.53	1.97 ± 0.47	R	**940 VRME R**
37.17	**37.60**	35.87	1.18	1.28	2.56	0.94	4.53	1.97 ± 0.47	R	**950 VE R**
		35.87	0.83	1.28	2.56	0.94	4.53	1.97 ± 0.47	R	**950 VRME R**
37.60	**38.03**	36.26	1.18	1.28	2.56	0.94	4.53	1.97 ± 0.47	R	**960 VE R**
		36.26	0.83	1.28	2.56	0.94	4.53	1.97 ± 0.47	R	**960 VRME R**
38.39	**40.35**	35.83	0.26	0.24	0.41	0.20	0.79	0.31 ± 0.06	R	**1000 VL R**
		35.83	0.26	0.24	0.41	0.20	0.79	0.31 ± 0.06	V	**1000 VL V**
37.99	**39.96**	35.83	0.59	0.56	0.98	0.39	1.77	0.79 ± 0.16	R	**1000 VA R**
		35.83	0.59	0.56	0.98	0.39	1.77	0.79 ± 0.16	V	**1000 VA V**
38.03	**38.46**	36.69	1.18	1.28	2.56	0.94	4.53	1.97 ± 0.47	R	**970 VE R**
		36.69	0.83	1.28	2.56	0.94	4.53	1.97 ± 0.47	R	**970 VRME R**
38.46	**38.90**	37.09	1.18	1.28	2.56	0.94	4.53	1.97 ± 0.47	R	**980 VE R**
		37.09	0.83	1.28	2.56	0.94	4.53	1.97 ± 0.47	R	**980 VRME R**
38.90	**39.33**	37.52	1.18	1.28	2.56	0.94	4.53	1.97 ± 0.47	R	**990 VE R**
		37.52	0.83	1.28	2.56	0.94	4.53	1.97 ± 0.47	R	**990 VRME R**
39.33	**39.76**	37.91	1.18	1.28	2.56	0.94	4.53	1.97 ± 0.47	R	**1000 VE R**
		37.91	0.83	1.28	2.56	0.94	4.53	1.97 ± 0.47	R	**1000 VRME R**
39.76	**40.35**	38.31	1.18	1.28	2.56	0.94	4.53	1.97 ± 0.47	R	**1020 VE R**
		38.31	0.83	1.28	2.56	0.94	4.53	1.97 ± 0.47	R	**1020 VRME R**
40.35	**42.32**	37.60	0.26	0.24	0.41	0.20	0.79	0.31 ± 0.06	R	**1050 VL R**
		37.60	0.26	0.24	0.41	0.20	0.79	0.31 ± 0.06	V	**1050 VL V**
39.96	**41.93**	37.60	0.59	0.56	0.98	0.39	1.77	0.79 ± 0.16	R	**1050 VA R**
40.35	**41.14**	38.98	1.18	1.28	2.56	0.94	4.53	1.97 ± 0.47	R	**1040 VE R**
		38.98	0.83	1.28	2.56	0.94	4.53	1.97 ± 0.47	R	**1040 VRME R**
41.14	**41.93**	39.69	1.18	1.28	2.56	0.94	4.53	1.97 ± 0.47	R	**1060 VE R**
		39.69	0.83	1.28	2.56	0.94	4.53	1.97 ± 0.47	R	**1060 VRME R**
42.32	**44.29**	39.37	0.26	0.24	0.41	0.20	0.79	0.31 ± 0.06	R	**1100 VL R**
		39.37	0.26	0.24	0.41	0.20	0.79	0.31 ± 0.06	V	**1100 VL V**
41.93	**43.90**	39.37	0.59	0.56	0.98	0.39	1.77	0.79 ± 0.16	R	**1100 VA R**
		40.43	1.18	1.28	2.56	0.94	4.53	1.97 ± 0.47	R	**1080 VE R**
41.93	**42.72**	40.43	0.83	1.28	2.56	0.94	4.53	1.97 ± 0.47	R	**1080 VRME R**
42.72	**43.50**	41.14	1.18	1.28	2.56	0.94	4.53	1.97 ± 0.47	R	**1100 VE R**
		41.14	0.83	1.28	2.56	0.94	4.53	1.97 ± 0.47	R	**1100 VRME R**
43.50	**44.29**	41.93	1.18	1.28	2.56	0.94	4.53	1.97 ± 0.47	R	**1120 VE R**
		41.93	0.83	1.28	2.56	0.94	4.53	1.97 ± 0.47	R	**1120 VRME R**
44.29	**46.26**	41.14	0.26	0.24	0.41	0.20	0.79	0.31 ± 0.06	R	**1150 VL R**
		41.14	0.26	0.24	0.41	0.20	0.79	0.31 ± 0.06	V	**1150 VL V**

d_1 **43.90–65.94** in

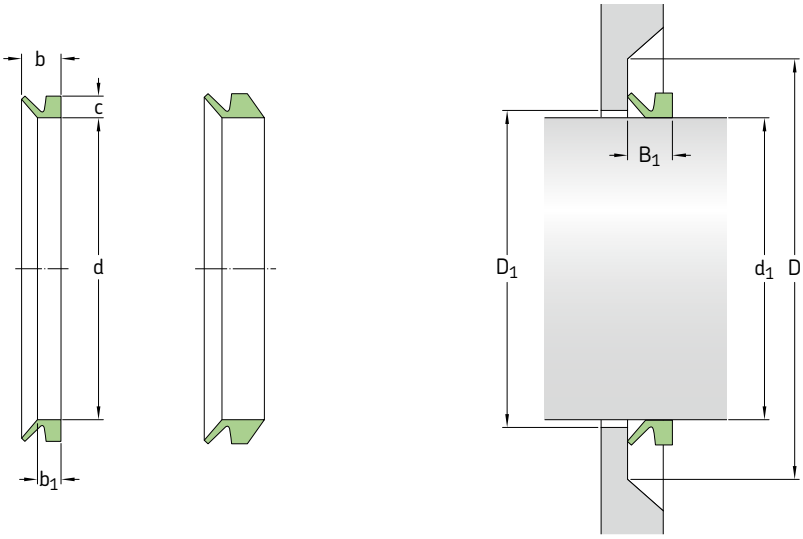

Dimensions Shaft diameter range d_1 over	incl.	Seal inside diameter, free state d	Nominal seal height c	Seal seat width b_1	Nominal seal width b	Clearance D_1 max.	Counterface D min.	Seal fitted width B_1	Lip code	Designation
in									–	–
43.90	**45.87**	41.14	0.59	0.56	0.98	0.39	1.77	0.79 ± 0.16	R	**1150 VA R**
44.29	**45.08**	42.68	1.18	1.28	2.56	0.94	4.53	1.97 ± 0.47	R	**1140 VE R**
		42.68	0.83	1.28	2.56	0.94	4.53	1.97 ± 0.47	R	**1140 VRME R**
45.08	**45.87**	43.43	1.18	1.28	2.56	0.94	4.53	1.97 ± 0.47	R	**1160 VE R**
		43.43	0.83	1.28	2.56	0.94	4.53	1.97 ± 0.47	R	**1160 VRME R**
46.26	**48.23**	42.91	0.26	0.24	0.41	0.20	0.79	0.31 ± 0.06	R	**1200 VL R**
		42.91	0.26	0.24	0.41	0.20	0.79	0.31 ± 0.06	V	**1200 VL V**
45.87	**47.83**	42.91	0.59	0.56	0.98	0.39	1.77	0.79 ± 0.16	R	**1200 VA R**
45.87	**46.65**	44.13	1.18	1.28	2.56	0.94	4.53	1.97 ± 0.47	R	**1180 VE R**
		44.13	0.83	1.28	2.56	0.94	4.53	1.97 ± 0.47	R	**1180 VRME R**
46.65	**47.44**	44.84	1.18	1.28	2.56	0.94	4.53	1.97 ± 0.47	R	**1200 VE R**
		44.84	0.83	1.28	2.56	0.94	4.53	1.97 ± 0.47	R	**1200 VRME R**
47.44	**48.23**	45.55	1.18	1.28	2.56	0.94	4.53	1.97 ± 0.47	R	**1220 VE R**
		45.55	0.83	1.28	2.56	0.94	4.53	1.97 ± 0.47	R	**1220 VRME R**
48.23	**50.20**	44.69	0.26	0.24	0.41	0.20	0.79	0.31 ± 0.06	R	**1250 VL R**
		44.69	0.26	0.24	0.41	0.20	0.79	0.31 ± 0.06	V	**1250 VL V**
47.83	**50.00**	44.69	0.59	0.56	0.98	0.39	1.77	0.79 ± 0.16	R	**1250 VA R**
48.23	**49.02**	46.30	1.18	1.28	2.56	0.94	4.53	1.97 ± 0.47	R	**1240 VE R**
		46.30	0.83	1.28	2.56	0.94	4.53	1.97 ± 0.47	R	**1240 VRME R**
49.02	**50.00**	47.05	1.18	1.28	2.56	0.94	4.53	1.97 ± 0.47	R	**1260 VE R**
		47.05	0.83	1.28	2.56	0.94	4.53	1.97 ± 0.47	R	**1260 VRME R**
50.00	**50.98**	47.95	1.18	1.28	2.56	0.94	4.53	1.97 ± 0.47	R	**1280 VE R**
		47.95	0.83	1.28	2.56	0.94	4.53	1.97 ± 0.47	R	**1280 VRME R**
50.20	**52.17**	46.46	0.26	0.24	0.41	0.20	0.79	0.31 ± 0.06	R	**1300 VL R**
		46.46	0.26	0.24	0.41	0.20	0.79	0.31 ± 0.06	V	**1300 VL V**
50.00	**51.97**	46.46	0.59	0.56	0.98	0.39	1.77	0.79 ± 0.16	R	**1300 VA R**
50.98	**51.77**	48.82	1.18	1.28	2.56	0.94	4.53	1.97 ± 0.47	R	**1300 VE R**
		48.82	0.83	1.28	2.56	0.94	4.53	1.97 ± 0.47	R	**1300 VRME R**

Dimensions Shaft diameter range d_1 over	incl.	Seal inside diameter, free state d	Nominal seal height c	Seal seat width b_1	Nominal seal width b	Clearance D_1 max.	Counterface D min.	Seal fitted width B_1	Lip code	Designation
in									–	–
51.77	**52.76**	49.57	1.18	1.28	2.56	0.94	4.53	1.97 ± 0.47	R	**1325 VE R**
		49.57	0.83	1.28	2.56	0.94	4.53	1.97 ± 0.47	R	**1325 VRME R**
52.17	**54.13**	48.23	0.26	0.24	0.41	0.20	0.79	0.31 ± 0.06	R	**1350 VL R**
		48.23	0.26	0.24	0.41	0.20	0.79	0.31 ± 0.06	V	**1350 VL V**
51.97	**53.94**	48.23	0.59	0.56	0.98	0.39	1.77	0.79 ± 0.16	R	**1350 VA R**
52.76	**53.74**	50.43	1.18	1.28	2.56	0.94	4.53	1.97 ± 0.47	R	**1350 VE R**
		50.43	0.83	1.28	2.56	0.94	4.53	1.97 ± 0.47	R	**1350 VRME R**
53.74	**54.72**	51.38	1.18	1.28	2.56	0.94	4.53	1.97 ± 0.47	R	**1375 VE R**
		51.38	0.83	1.28	2.56	0.94	4.53	1.97 ± 0.47	R	**1375 VRME R**
54.13	**56.10**	50.00	0.26	0.24	0.41	0.20	0.79	0.31 ± 0.06	R	**1400 VL R**
		50.00	0.26	0.24	0.41	0.20	0.79	0.31 ± 0.06	V	**1400 VL V**
53.94	**55.91**	50.00	0.59	0.56	0.98	0.39	1.77	0.79 ± 0.16	R	**1400 VA R**
54.72	**55.71**	52.28	1.18	1.28	2.56	0.94	4.53	1.97 ± 0.47	R	**1400 VE R**
		52.28	0.83	1.28	2.56	0.94	4.53	1.97 ± 0.47	R	**1400 VRME R**
55.71	**56.69**	53.15	1.18	1.28	2.56	0.94	4.53	1.97 ± 0.47	R	**1425 VE R**
		53.15	0.83	1.28	2.56	0.94	4.53	1.97 ± 0.47	R	**1425 VRME R**
56.10	**58.07**	51.77	0.26	0.24	0.41	0.20	0.79	0.31 ± 0.06	R	**1450 VL R**
		51.77	0.26	0.24	0.41	0.20	0.79	0.31 ± 0.06	V	**1450 VL V**
55.91	**57.87**	51.77	0.59	0.56	0.98	0.39	1.77	0.79 ± 0.16	R	**1450 VA R**
56.69	**57.68**	54.09	1.18	1.28	2.56	0.94	4.53	1.97 ± 0.47	R	**1450 VE R**
		54.09	0.83	1.28	2.56	0.94	4.53	1.97 ± 0.47	R	**1450 VRME R**
57.68	**58.66**	55.00	1.18	1.28	2.56	0.94	4.53	1.97 ± 0.47	R	**1475 VE R**
		55.00	0.83	1.28	2.56	0.94	4.53	1.97 ± 0.47	R	**1475 VRME R**
58.07	**60.04**	53.54	0.26	0.24	0.41	0.20	0.79	0.31 ± 0.06	R	**1500 VL R**
		53.54	0.26	0.24	0.41	0.20	0.79	0.31 ± 0.06	V	**1500 VL V**
57.87	**59.84**	53.54	0.59	0.56	0.98	0.39	1.77	0.79 ± 0.16	R	**1500 VA R**
58.66	**59.65**	55.87	1.18	1.28	2.56	0.94	4.53	1.97 ± 0.47	R	**1500 VE R**
		55.87	0.83	1.28	2.56	0.94	4.53	1.97 ± 0.47	R	**1500 VRME R**
59.65	**60.63**	56.81	1.18	1.28	2.56	0.94	4.53	1.97 ± 0.47	R	**1525 VE R**
		56.81	0.83	1.28	2.56	0.94	4.53	1.97 ± 0.47	R	**1525 VRME R**
60.04	**62.01**	55.31	0.26	0.24	0.41	0.20	0.79	0.31 ± 0.06	R	**1550 VL R**
		55.31	0.26	0.24	0.41	0.20	0.79	0.31 ± 0.06	V	**1550 VL V**
59.84	**61.81**	55.31	0.59	0.56	0.98	0.39	1.77	0.79 ± 0.16	R	**1550 VA R**
60.63	**61.81**	57.76	1.18	1.28	2.56	0.94	4.53	1.97 ± 0.47	R	**1550 VE R**
		57.76	0.83	1.28	2.56	0.94	4.53	1.97 ± 0.47	R	**1550 VRME R**
61.81	**62.99**	58.86	1.18	1.28	2.56	0.94	4.53	1.97 ± 0.47	R	**1575 VE R**
		58.86	0.83	1.28	2.56	0.94	4.53	1.97 ± 0.47	R	**1575 VRME R**
62.01	**63.98**	57.09	0.26	0.24	0.41	0.20	0.79	0.31 ± 0.06	R	**1600 VL R**
		57.09	0.26	0.24	0.41	0.20	0.79	0.31 ± 0.06	V	**1600 VL V**
61.81	**63.78**	57.09	0.59	0.56	0.98	0.39	1.77	0.79 ± 0.16	R	**1600 VA R**
62.99	**64.57**	60.00	1.18	1.28	2.56	0.94	4.53	1.97 ± 0.47	R	**1600 VE R**
		60.00	0.83	1.28	2.56	0.94	4.53	1.97 ± 0.47	R	**1600 VRME R**
63.98	**65.94**	58.86	0.26	0.24	0.41	0.20	0.79	0.31 ± 0.06	R	**1650 VL R**
		58.86	0.26	0.24	0.41	0.20	0.79	0.31 ± 0.06	V	**1650 VL V**

d_1 **63.78–79.53** in

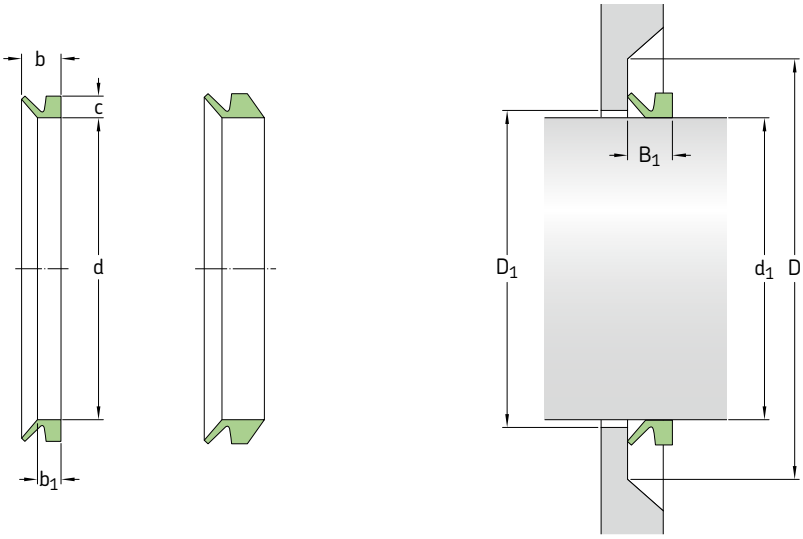

Dimensions Shaft diameter range d_1 over	incl.	Seal inside diameter, free state d	Nominal seal height c	Seal seat width b_1	Nominal seal width b	Clearance D_1 max.	Counterface D min.	Seal fitted width B_1	Lip code	Designation
in									–	–
63.78	**65.75**	58.86	0.59	0.56	0.98	0.39	1.77	0.79 ± 0.16	R	**1650 VA R**
64.57	**66.14**	61.38	1.18	1.28	2.56	0.94	4.53	1.97 ± 0.47	R	**1650 VE R**
		61.38	0.83	1.28	2.56	0.94	4.53	1.97 ± 0.47	R	**1650 VRME R**
65.94	**67.91**	60.63	0.26	0.24	0.41	0.20	0.79	0.31 ± 0.06	R	**1700 VL R**
		60.63	0.26	0.24	0.41	0.20	0.79	0.31 ± 0.06	V	**1700 VL V**
65.75	**67.72**	60.63	0.59	0.56	0.98	0.39	1.77	0.79 ± 0.16	R	**1700 VA R**
66.14	**67.72**	62.83	1.18	1.28	2.56	0.94	4.53	1.97 ± 0.47	R	**1700 VE R**
		62.83	0.83	1.28	2.56	0.94	4.53	1.97 ± 0.47	R	**1700 VRME R**
67.91	**69.88**	62.40	0.26	0.24	0.41	0.20	0.79	0.31 ± 0.06	R	**1750 VL R**
		62.40	0.26	0.24	0.41	0.20	0.79	0.31 ± 0.06	V	**1750 VL V**
67.72	**69.69**	62.40	0.59	0.56	0.98	0.39	1.77	0.79 ± 0.16	R	**1750 VA R**
67.72	**69.49**	64.25	1.18	1.28	2.56	0.94	4.53	1.97 ± 0.47	R	**1750 VE R**
		64.25	0.83	1.28	2.56	0.94	4.53	1.97 ± 0.47	R	**1750 VRME R**
69.49	**71.26**	65.79	1.18	1.28	2.56	0.94	4.53	1.97 ± 0.47	R	**1800 VE R**
		65.79	0.83	1.28	2.56	0.94	4.53	1.97 ± 0.47	R	**1800 VRME R**
69.88	**71.85**	64.17	0.26	0.24	0.41	0.20	0.79	0.31 ± 0.06	R	**1800 VL R**
		64.17	0.26	0.24	0.41	0.20	0.79	0.31 ± 0.06	V	**1800 VL V**
69.69	**71.65**	64.17	0.59	0.56	0.98	0.39	1.77	0.79 ± 0.16	R	**1800 VA R**
71.26	**73.03**	67.48	1.18	1.28	2.56	0.94	4.53	1.97 ± 0.47	R	**1850 VE R**
		67.48	0.83	1.28	2.56	0.94	4.53	1.97 ± 0.47	R	**1850 VRME R**
71.85	**73.82**	65.94	0.26	0.24	0.41	0.20	0.79	0.31 ± 0.06	R	**1850 VL R**
		65.94	0.26	0.24	0.41	0.20	0.79	0.31 ± 0.06	V	**1850 VL V**
71.65	**73.62**	65.94	0.59	0.56	0.98	0.39	1.77	0.79 ± 0.16	R	**1850 VA R**
73.03	**75.00**	69.02	1.18	1.28	2.56	0.94	4.53	1.97 ± 0.47	R	**1900 VE R**
		69.02	0.83	1.28	2.56	0.94	4.53	1.97 ± 0.47	R	**1900 VRME R**
73.82	**75.79**	67.72	0.26	0.24	0.41	0.20	0.79	0.31 ± 0.06	R	**1900 VL R**
		67.72	0.26	0.24	0.41	0.20	0.79	0.31 ± 0.06	V	**1900 VL V**
73.62	**75.59**	67.72	0.59	0.56	0.98	0.39	1.77	0.79 ± 0.16	R	**1900 VA R**

Dimensions Shaft diameter range d_1 over	incl.	Seal inside diameter, free state d	Nominal seal height c	Seal seat width b_1	Nominal seal width b	Clearance D_1 max.	Counterface D min.	Seal fitted width B_1	Lip code	Designation
in									–	–
75.00	**76.97**	70.63	1.18	1.28	2.56	0.94	4.53	1.97 ± 0.47	R	**1950 VE R**
		70.63	0.83	1.28	2.56	0.94	4.53	1.97 ± 0.47	R	**1950 VRME R**
75.79	**77.76**	69.49	0.26	0.24	0.41	0.20	0.79	0.31 ± 0.06	R	**1950 VL R**
75.79	**77.76**	69.49	0.26	0.24	0.41	0.20	0.79	0.31 ± 0.06	V	**1950 VL V**
		69.49	0.59	0.56	0.98	0.39	1.77	0.79 ± 0.16	R	**1950 VA R**
76.97	**79.13**	72.60	1.18	1.28	2.56	0.94	4.53	1.97 ± 0.47	R	**2000 VE R**
		72.60	0.83	1.28	2.56	0.94	4.53	1.97 ± 0.47	R	**2000 VRME R**
77.76	**79.72**	71.26	0.26	0.24	0.41	0.20	0.79	0.31 ± 0.06	R	**2000 VL R**
		71.26	0.26	0.24	0.41	0.20	0.79	0.31 ± 0.06	V	**2000 VL V**
77.56	**79.53**	71.26	0.59	0.56	0.98	0.39	1.77	0.79 ± 0.16	R	**2000 VA R**

d_1 **2,7–58** mm

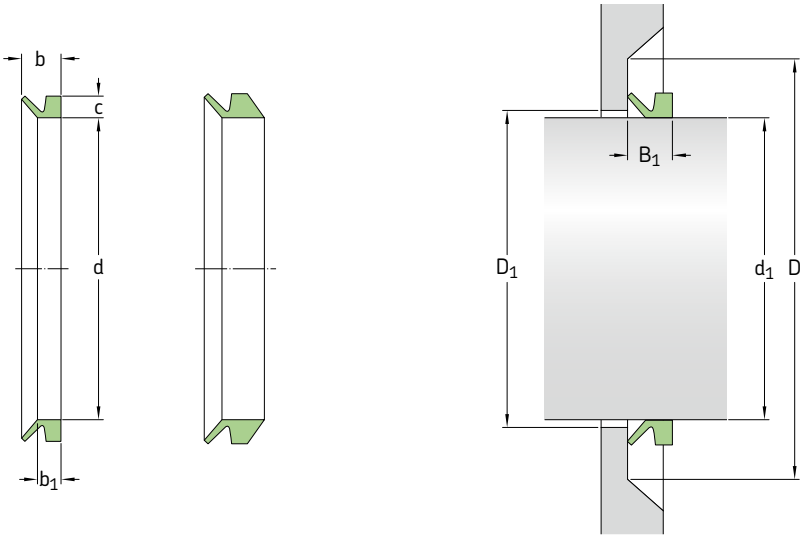

Dimensions Shaft diameter range d_1 over	incl.	Seal inside diameter, free state d	Seal seat width b_1	Nominal seal width b	Nominal seal height c	Clearance D_1 max.	Counterface D min.	Seal fitted width B_1	Design	Lip code	Designation
mm									–	–	–
2,7	**3,5**	2,5	2,1	3	1,5	d_1 + 1	d_1 + 4	2,5 ± 0,3	VR1	R	**400030**
		2,5	2,1	3	1,5	d_1 + 1	d_1 + 4	2,5 ± 0,3	VR1	V	**400034**
3,5	**4,5**	3,2	2,4	3,7	2	d_1 + 1	d_1 + 6	3 ± 0,4	VR1	R	**400040**
		3,2	2,4	3,7	2	d_1 + 1	d_1 + 6	3 ± 0,4	VR1	V	**400044**
4,5	**5,5**	4	2,4	3,7	2	d_1 + 1	d_1 + 6	3 ± 0,4	VR1	R	**400050**
		4	2,4	3,7	2	d_1 + 1	d_1 + 6	3 ± 0,4	VR1	V	**400054**
		4	3,9	5,2	2	d_1 + 1	d_1 + 6	4,5 ± 0,4	VR2	R	**400051**
		4	3,9	5,2	2	d_1 + 1	d_1 + 6	4,5 ± 0,4	VR2	V	**400055**
5,5	**6,5**	5	2,4	3,7	2	d_1 + 1	d_1 + 6	3 ± 0,4	VR1	R	**400060**
		5	2,4	3,7	2	d_1 + 1	d_1 + 6	3 ± 0,4	VR1	V	**400064**
		5	3,9	5,2	2	d_1 + 1	d_1 + 6	4,5 ± 0,4	VR2	R	**400061**
		5	3,9	5,2	2	d_1 + 1	d_1 + 6	4,5 ± 0,4	VR2	V	**400065**
6,5	**8**	6	2,4	3,7	2	d_1 + 1	d_1 + 6	3 ± 0,4	VR1	R	**400070**
		6	2,4	3,7	2	d_1 + 1	d_1 + 6	3 ± 0,4	VR1	V	**400074**
		6	3,9	5,2	2	d_1 + 1	d_1 + 6	4,5 ± 0,4	VR2	R	**400071**
		6	3,9	5,2	2	d_1 + 1	d_1 + 6	4,5 ± 0,4	VR2	V	**400075**
8	**9,5**	7	2,4	3,7	2	d_1 + 1	d_1 + 6	3 ± 0,4	VR1	R	**400080**
		7	2,4	3,7	2	d_1 + 1	d_1 + 6	3 ± 0,4	VR1	V	**400084**
		7	3,9	5,2	2	d_1 + 1	d_1 + 6	4,5 ± 0,4	VR2	R	**400081**
		7	3,9	5,2	2	d_1 + 1	d_1 + 6	4,5 ± 0,4	VR2	V	**400085**
9,5	**11,5**	9	3,4	5,5	3	d_1 + 1	d_1 + 9	4,5 ± 0,6	VR1	R	**400100**
		9	3,4	5,5	3	d_1 + 1	d_1 + 9	4,5 ± 0,6	VR1	V	**400104**
		9	5,6	7,7	3	d_1 + 1	d_1 + 9	6,7 ± 0,6	VR2	R	**400101**
		9	5,6	7,7	3	d_1 + 1	d_1 + 9	6,7 ± 0,6	VR2	V	**400105**
11,5	**12,5**	10,5	3,4	5,5	3	d_1 + 1	d_1 + 9	4,5 ± 0,6	VR1	R	**400120**
		10,5	3,4	5,5	3	d_1 + 1	d_1 + 9	4,5 ± 0,6	VR1	V	**400124**
		10,5	5,6	7,7	3	d_1 + 1	d_1 + 9	6,7 ± 0,6	VR2	R	**400121**
		10,5	5,6	7,7	3	d_1 + 1	d_1 + 9	6,7 ± 0,6	VR2	V	**400125**
12,5	**13,5**	11,7	3,4	5,5	3	d_1 + 1	d_1 + 9	4,5 ± 0,6	VR1	R	**400130**
		11,7	3,4	5,5	3	d_1 + 1	d_1 + 9	4,5 ± 0,6	VR1	V	**400134**
13,5	**15,5**	12,5	3,4	5,5	3	d_1 + 1	d_1 + 9	4,5 ± 0,6	VR1	R	**400140**
		12,5	3,4	5,5	3	d_1 + 1	d_1 + 9	4,5 ± 0,6	VR1	V	**400144**
13,5	**15,5**	12,5	5,6	7,7	3	d_1 + 1	d_1 + 9	6,7 ± 0,6	VR2	R	**400141**
		12,5	5,6	7,7	3	d_1 + 1	d_1 + 9	6,7 ± 0,6	VR2	V	**400145**

Dimensions Shaft diameter range d_1 over	incl.	Seal inside diameter, free state d	Seal seat width b_1	Nominal seal width b	Nominal seal height c	Clearance D_1 max.	Counterface D min.	Seal fitted width B_1	Design	Lip code	Designation
mm									–	–	–
15,5	**17**	14	3,4	5,5	3	d_1 + 1	d_1 + 9	4,5 ± 0,6	VR1	R	**400160**
		14	3,4	5,5	3	d_1 + 1	d_1 + 9	4,5 ± 0,6	VR1	V	**400164**
15,5	**17,5**	14	5,6	7,7	3	d_1 + 1	d_1 + 9	6,7 ± 0,6	VR2	R	**400161**
		14	5,6	7,7	3	d_1 + 1	d_1 + 9	6,7 ± 0,6	VR2	V	**400165**
17,5	**19**	16	3,4	5,5	3	d_1 + 1	d_1 + 9	4,5 ± 0,6	VR1	R	**400180**
		16	3,4	5,5	3	d_1 + 1	d_1 + 9	4,5 ± 0,6	VR1	V	**400184**
		16	5,6	7,7	3	d_1 + 1	d_1 + 9	6,7 ± 0,6	VR2	R	**400181**
		16	5,6	7,7	3	d_1 + 1	d_1 + 9	6,7 ± 0,6	VR2	V	**400185**
19	**21**	18	4,7	7,5	4	d_1 + 2	d_1 + 12	6 ± 0,8	VR1	R	**400200**
		18	4,7	7,5	4	d_1 + 2	d_1 + 12	6 ± 0,8	VR1	V	**400204**
		18	7,9	10,5	4	d_1 + 2	d_1 + 12	9 ± 0,8	VR2	R	**400201**
		18	7,9	10,5	4	d_1 + 2	d_1 + 12	9 ± 0,8	VR2	V	**400205**
21	**24**	20	4,7	7,5	4	d_1 + 2	d_1 + 12	6 ± 0,8	VR1	R	**400220**
		20	4,7	7,5	4	d_1 + 2	d_1 + 12	6 ± 0,8	VR1	V	**400224**
		20	7,9	10,5	4	d_1 + 2	d_1 + 12	9 ± 0,8	VR2	R	**400221**
		20	7,9	10,5	4	d_1 + 2	d_1 + 12	9 ± 0,8	VR2	V	**400225**
24	**27**	22	4,7	7,5	4	d_1 + 2	d_1 + 12	6 ± 0,8	VR1	R	**400250**
		22	4,7	7,5	4	d_1 + 2	d_1 + 12	6 ± 0,8	VR1	V	**400254**
		22	7,9	10,5	4	d_1 + 2	d_1 + 12	9 ± 0,8	VR2	R	**400251**
		22	7,9	10,5	4	d_1 + 2	d_1 + 12	9 ± 0,8	VR2	V	**400255**
27	**29**	25	4,7	7,5	4	d_1 + 2	12	6 ± 0,8	VR1	R	**400280**
		25	4,7	7,5	4	d_1 + 2	d_1 + 12	6 ± 0,8	VR1	V	**400284**
		25	7,9	10,5	4	d_1 + 2	d_1 + 12	9 ± 0,8	VR2	R	**400281**
		25	7,9	10,5	4	d_1 + 2	d_1 + 12	9 ± 0,8	VR2	V	**400285**
29	**31**	27	4,7	7,5	4	d_1 + 2	d_1 + 12	6 ± 0,8	VR1	R	**400300**
		27	4,7	7,5	4	d_1 + 2	d_1 + 12	6 ± 0,8	VR1	V	**400304**
		27	7,9	10,5	4	d_1 + 2	d_1 + 12	9 ± 0,8	VR2	R	**400301**
		27	7,9	10,5	4	d_1 + 2	d_1 + 12	9 ± 0,8	VR2	V	**400305**
31	**33**	29	4,7	7,5	4	d_1 + 2	d_1 + 12	6 ± 0,8	VR1	R	**400320**
		29	4,7	7,5	4	d_1 + 2	d_1 + 12	6 ± 0,8	VR1	V	**400324**
		29	7,9	10,5	4	d_1 + 2	d_1 + 12	9 ± 0,8	VR2	R	**400321**
		29	7,9	10,5	4	d_1 + 2	d_1 + 12	9 ± 0,8	VR2	V	**400325**
33	**36**	31	4,7	7,5	4	d_1 + 2	d_1 + 12	6 ± 0,8	VR1	R	**400350**
		31	4,7	7,5	4	d_1 + 2	d_1 + 12	6 ± 0,8	VR1	V	**400354**
		31	7,9	10,5	4	d_1 + 2	d_1 + 12	9 ± 0,8	VR2	R	**400351**
		31	7,9	10,5	4	d_1 + 2	d_1 + 12	9 ± 0,8	VR2	V	**400355**
36	**38**	34	4,7	7,5	4	d_1 + 2	d_1 + 12	6 ± 0,8	VR1	R	**400380**
		34	4,7	7,5	4	d_1 + 2	d_1 + 12	6 ± 0,8	VR1	V	**400384**
		34	7,9	10,5	4	d_1 + 2	d_1 + 12	9 ± 0,8	VR2	R	**400381**
		34	7,9	10,5	4	d_1 + 2	d_1 + 12	9 ± 0,8	VR2	V	**400385**
38	**43**	36	5,5	9	5	d_1 + 2	d_1 + 15	7 ± 1	VR1	R	**400400**
		36	5,5	9	5	d_1 + 2	d_1 + 15	7 ± 1	VR1	V	**400409**
		36	9,5	13	5	d_1 + 2	d_1 + 15	11 ± 1	VR2	R	**400401**
		36	9,5	13	5	d_1 + 2	d_1 + 15	11 ± 1	VR2	V	**400405**
43	**48**	40	5,5	9	5	d_1 + 2	d_1 + 15	7 ± 1	VR1	R	**400450**
		40	5,5	9	5	d_1 + 2	d_1 + 15	7 ± 1	VR1	V	**400454**
		40	9,5	13	5	d_1 + 2	d_1 + 15	11 ± 1	VR2	R	**400451**
		40	9,5	13	5	d_1 + 2	d_1 + 15	11 ± 1	VR2	V	**400455**
48	**53**	45	5,5	9	5	d_1 + 2	d_1 + 15	7 ± 1	VR1	R	**400500**
		45	5,5	9	5	d_1 + 2	d_1 + 15	7 ± 1	VR1	V	**400504**
		45	9,5	13	5	d_1 + 2	d_1 + 15	11 ± 1	VR2	R	**400501**
		45	9,5	13	5	d_1 + 2	d_1 + 15	11 ± 1	VR2	V	**400505**
53	**58**	49	5,5	9	5	d_1 + 2	d_1 + 15	7 ± 1	VR1	R	**400550**
		49	5,5	9	5	d_1 + 2	d_1 + 15	7 ± 1	VR1	V	**400554**
		49	9,5	13	5	d_1 + 2	d_1 + 15	11 ± 1	VR2	R	**400551**
		49	9,5	13	5	d_1 + 2	d_1 + 15	11 ± 1	VR2	V	**400555**

d_1 **58–210** mm

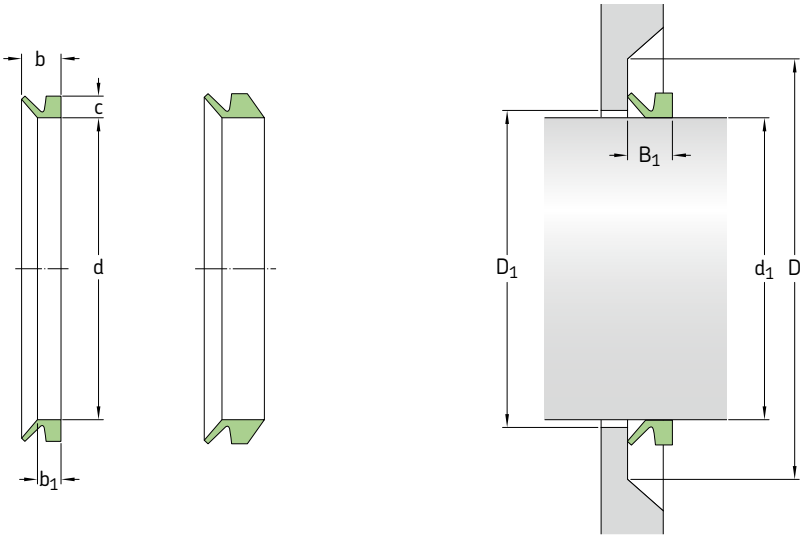

Dimensions									Design	Lip code	Designation
Shaft diameter range		Seal inside diameter, free state	Seal seat width	Nominal seal width	Nominal seal height	Clearance	Counterface	Seal fitted width			
d_1 over	incl.	d	b_1	b	c	D_1 max.	D min.	B_1			
mm									–	–	–
58	**63**	54	5,5	9	5	d_1 + 2	d_1 + 15	7 ± 1	VR1	R	**400600**
		54	5,5	9	5	d_1 + 2	d_1 + 15	7 ± 1	VR1	V	**400604**
		54	9,5	13	5	d_1 + 2	d_1 + 15	11 ± 1	VR2	R	**400601**
		54	9,5	13	5	d_1 + 2	d_1 + 15	11 ± 1	VR2	V	**400605**
63	**68**	58	5,5	9	5	d_1 + 2	d_1 + 15	7 ± 1	VR1	R	**400650**
		58	5,5	9	5	d_1 + 2	d_1 + 15	7 ± 1	VR1	V	**400654**
		58	9,5	13	5	d_1 + 2	d_1 + 15	11 ± 1	VR2	R	**400651**
		58	9,5	13	5	d_1 + 2	d_1 + 15	11 ± 1	VR2	V	**400655**
68	**73**	63	6,8	11	6	d_1 + 3	d_1 + 18	9 ± 1,2	VR1	R	**400700**
		63	6,8	11	6	d_1 + 3	d_1 + 18	9 ± 1,2	VR1	V	**400704**
		63	11,3	15,5	6	d_1 + 3	d_1 + 18	13,5 ± 1,2	VR2	R	**400701**
		63	11,3	15,5	6	d_1 + 3	d_1 + 18	13,5 ± 1,2	VR2	V	**400705**
73	**78**	67	6,8	11	6	d_1 + 3	d_1 + 18	9 ± 1,2	VR1	R	**400750**
		67	6,8	11	6	d_1 + 3	d_1 + 18	13,5 ± 1,2	VR2	R	**400751**
		67	11,3	15,5	6	d_1 + 3	d_1 + 18	13,5 ± 1,2	VR2	V	**400755**
78	**83**	72	6,8	11	6	d_1 + 3	d_1 + 18	9 ± 1,2	VR1	R	**400800**
		72	6,8	11	6	d_1 + 3	d_1 + 18	9 ± 1,2	VR1	V	**400804**
		72	11,3	15,5	6	d_1 + 3	d_1 + 18	13,5 ± 1,2	VR2	R	**400801**
		72	11,3	15,5	6	d_1 + 3	d_1 + 18	13,5 ± 1,2	VR2	V	**400805**
83	**88**	76	6,8	11	6	d_1 + 3	d_1 + 18	9 ± 1,2	VR1	R	**400850**
		76	6,8	11	6	d_1 + 3	d_1 + 18	9 ± 1,2	VR1	V	**400854**
		76	11,3	15,5	6	d_1 + 3	d_1 + 18	13,5 ± 1,2	VR2	R	**400851**
		76	11,3	15,5	6	d_1 + 3	d_1 + 18	13,5 ± 1,2	VR2	V	**400855**
88	**93**	81	6,8	11	6	d_1 + 3	d_1 + 18	9 ± 1,2	VR1	R	**400900**
		81	6,8	11	6	d_1 + 3	d_1 + 18	9 ± 1,2	VR1	V	**400904**
		81	11,3	15,5	6	d_1 + 3	d_1 + 18	13,5 ± 1,2	VR2	R	**400901**
		81	11,3	15,5	6	d_1 + 3	d_1 + 18	13,5 ± 1,2	VR2	V	**400905**
93	**98**	85	6,8	11	6	d_1 + 3	d_1 + 18	9 ± 1,2	VR1	R	**400950**
		85	6,8	11	6	d_1 + 3	d_1 + 18	9 ± 1,2	VR1	V	**400954**
		85	11,3	15,5	6	d_1 + 3	d_1 + 18	13,5 ± 1,2	VR2	R	**400951**
		85	11,3	15,5	6	d_1 + 3	d_1 + 18	13,5 ± 1,2	VR2	V	**400955**
98	**105**	90	6,8	11	6	d_1 + 3	d_1 + 18	9 ± 1,2	VR1	R	**401000**
		90	6,8	11	6	d_1 + 3	d_1 + 18	9 ± 1,2	VR1	V	**401004**
		90	11,3	15,5	6	d_1 + 3	d_1 + 18	13,5 ± 1,2	VR2	R	**401001**
		90	11,3	15,5	6	d_1 + 3	d_1 + 18	13,5 ± 1,2	VR2	V	**401005**

Dimensions									Design	Lip code	Designation
Shaft diameter range		Seal inside diameter, free state	Seal seat width	Nominal seal width	Nominal seal height	Clearance	Counterface	Seal fitted width			
d_1 over	incl.	d	b_1	b	c	D_1 max.	D min.	B_1			
mm									–	–	–
105	**115**	99	6	10,5	6,5	$d_1 + 5$	$d_1 + 20$	8 ± 1,5	VR3	R	**401102**
		99	6	10,5	6,5	$d_1 + 5$	$d_1 + 20$	8 ± 1,5	VR3	V	**401106**
		99	7,9	12,8	7	$d_1 + 4$	$d_1 + 21$	10,5 ± 1,5	VR1	R	**401100**
		99	7,9	12,8	7	$d_1 + 4$	$d_1 + 21$	10,5 ± 1,5	VR1	V	**401104**
		99	13,1	18	7	$d_1 + 4$	$d_1 + 21$	15,5 ± 1,5	VR2	R	**401101**
		99	13,1	18	7	$d_1 + 4$	$d_1 + 21$	15,5 ± 1,5	VR2	V	**401105**
115	**125**	108	6	10,5	6,5	$d_1 + 5$	$d_1 + 20$	8 ± 1,5	VR3	R	**401202**
		108	6	10,5	6,5	$d_1 + 5$	$d_1 + 20$	8 ± 1,5	VR3	V	**401206**
		108	7,9	12,8	7	$d_1 + 4$	$d_1 + 21$	10,5 ± 1,5	VR1	R	**401200**
		108	7,9	12,8	7	$d_1 + 4$	$d_1 + 21$	10,5 ± 1,5	VR1	V	**401204**
		108	13,1	18	7	$d_1 + 4$	$d_1 + 21$	15,5 ± 1,5	VR2	R	**401201**
		108	13,1	18	7	$d_1 + 4$	$d_1 + 21$	15,5 ± 1,5	VR2	V	**401205**
125	**135**	117	6	10,5	6,5	$d_1 + 5$	$d_1 + 20$	8 ± 1,5	VR3	R	**401302**
		117	6	10,5	6,5	$d_1 + 5$	$d_1 + 20$	8 ± 1,5	VR3	V	**401306**
		117	7,9	12,8	7	$d_1 + 4$	$d_1 + 21$	10,5 ± 1,5	VR1	R	**401300**
		117	7,9	12,8	7	$d_1 + 4$	$d_1 + 21$	10,5 ± 1,5	VR1	V	**401304**
		117	13,1	18	7	$d_1 + 4$	$d_1 + 21$	15,5 ± 1,5	VR2	R	**401301**
		117	13,1	18	7	$d_1 + 4$	$d_1 + 21$	15,5 ± 1,5	VR2	V	**401305**
135	**145**	126	6	10,5	6,5	$d_1 + 5$	$d_1 + 20$	8 ± 1,5	VR3	R	**401402**
		126	6	10,5	6,5	$d_1 + 5$	$d_1 + 20$	8 ± 1,5	VR3	V	**401406**
		126	7,9	12,8	7	$d_1 + 4$	$d_1 + 21$	10,5 ± 1,5	VR1	R	**401400**
		126	7,9	12,8	7	$d_1 + 4$	$d_1 + 21$	10,5 ± 1,5	VR1	V	**401404**
		126	13,1	18	7	$d_1 + 4$	$d_1 + 21$	15,5 ± 1,5	VR2	R	**401401**
		126	13,1	18	7	$d_1 + 4$	$d_1 + 21$	15,5 ± 1,5	VR2	V	**401405**
145	**155**	135	6	10,5	6,5	$d_1 + 5$	$d_1 + 20$	8 ± 1,5	VR3	R	**401502**
		135	6	10,5	6,5	$d_1 + 5$	$d_1 + 20$	8 ± 1,5	VR3	V	**401506**
		135	7,9	12,8	7	$d_1 + 4$	$d_1 + 21$	10,5 ± 1,5	VR1	R	**401500**
		135	7,9	12,8	7	$d_1 + 4$	$d_1 + 21$	10,5 ± 1,5	VR1	V	**401504**
		135	13,1	18	7	$d_1 + 4$	$d_1 + 21$	15,5 ± 1,5	VR2	R	**401501**
		135	13,1	18	7	$d_1 + 4$	$d_1 + 21$	15,5 ± 1,5	VR2	V	**401505**
		144	6	10,5	6,5	$d_1 + 5$	$d_1 + 20$	8 ± 1,5	VR3	R	**401602**
155	**165**	144	6	10,5	6,5	$d_1 + 5$	$d_1 + 20$	8 ± 1,5	VR3	V	**401606**
		144	9	14,5	8	$d_1 + 4$	$d_1 + 24$	12 ± 1,8	VR1	R	**401600**
		144	9	14,5	8	$d_1 + 4$	$d_1 + 24$	12 ± 1,8	VR1	V	**401604**
		144	15	20,5	8	$d_1 + 4$	$d_1 + 24$	18 ± 1,8	VR2	R	**401601**
		144	15	20,5	8	$d_1 + 4$	$d_1 + 24$	18 ± 1,8	VR2	V	**401605**
165	**175**	153	6	10,5	6,5	$d_1 + 5$	$d_1 + 20$	8 ± 1,5	VR3	R	**401702**
		153	6	10,5	6,5	$d_1 + 5$	$d_1 + 20$	8 ± 1,5	VR3	V	**401706**
		153	9	14,5	8	$d_1 + 4$	$d_1 + 24$	12 ± 1,8	VR1	R	**401700**
		153	9	14,5	8	$d_1 + 4$	$d_1 + 24$	12 ± 1,8	VR1	V	**401704**
		153	15	20,5	8	$d_1 + 4$	$d_1 + 24$	18 ± 1,8	VR2	R	**401701**
		153	15	20,5	8	$d_1 + 4$	$d_1 + 24$	18 ± 1,8	VR2	V	**401705**
175	**185**	162	6	10,5	6,5	$d_1 + 5$	$d_1 + 20$	8 ± 1,5	VR3	R	**401802**
		162	6	10,5	6,5	$d_1 + 5$	$d_1 + 20$	8 ± 1,5	VR3	V	**401806**
		162	9	14,5	8	$d_1 + 4$	$d_1 + 24$	12 ± 1,8	VR1	R	**401800**
		162	9	14,5	8	$d_1 + 4$	$d_1 + 24$	12 ± 1,8	VR1	V	**401804**
		162	15	20,5	8	$d_1 + 4$	$d_1 + 24$	18 ± 1,8	VR2	R	**401801**
		162	15	20,5	8	$d_1 + 4$	$d_1 + 24$	18 ± 1,8	VR2	V	**401805**
185	**195**	171	6	10,5	6,5	$d_1 + 5$	$d_1 + 20$	8 ± 1,5	VR3	R	**401902**
		171	6	10,5	6,5	$d_1 + 5$	$d_1 + 20$	8 ± 1,5	VR3	V	**401906**
		171	9	14,5	8	$d_1 + 4$	$d_1 + 24$	12 ± 1,8	VR1	R	**401900**
		171	9	14,5	8	$d_1 + 4$	$d_1 + 24$	12 ± 1,8	VR1	V	**401904**
		171	15	20,5	8	$d_1 + 4$	$d_1 + 24$	18 ± 1,8	VR2	R	**401901**
		171	15	20,5	8	$d_1 + 4$	$d_1 + 24$	18 ± 1,8	VR2	V	**401905**
195	**210**	182	6	10,5	6,5	$d_1 + 5$	$d_1 + 20$	8 ± 1,5	VR3	R	**4020022**
		182	6	10,5	6,5	$d_1 + 5$	$d_1 + 20$	8 ± 1,5	VR3	V	**402006**
		180	9	14,5	8	$d_1 + 4$	$d_1 + 24$	12 ± 1,8	VR1	R	**401990**
		180	9	14,5	8	$d_1 + 4$	$d_1 + 24$	12 ± 1,8	VR1	V	**401994**
		180	15	20,5	8	$d_1 + 4$	$d_1 + 24$	18 ± 1,8	VR2	R	**401991**
		180	15	20,5	8	$d_1 + 4$	$d_1 + 24$	18 ± 1,8	VR2	V	**401995**

d_1 **190–410** mm

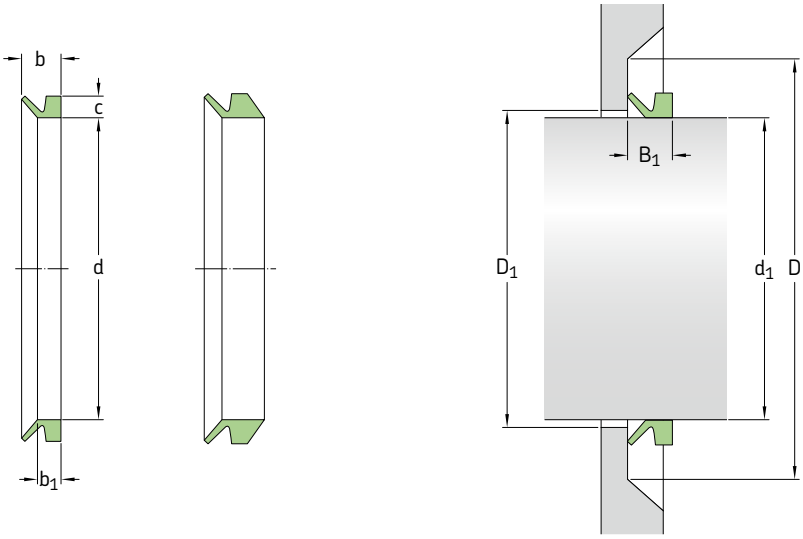

Dimensions Shaft diameter range d_1 over	incl.	Seal inside diameter, free state d	Seal seat width b_1	Nominal seal width b	Nominal seal height c	Clearance D_1 max.	Counterface D min.	Seal fitted width B_1	Design	Lip code	Designation
mm									–	–	–
190	**210**	180	14,3	25	15	d_1 + 10	d_1 + 45	20 ± 4	VR1	R	**402000**
		180	14,3	25	15	d_1 + 10	d_1 + 45	20 ± 4	VR1	V	**402004**
210	**233**	198	6	10,5	6,5	d_1 + 5	d_1 + 20	8 ± 1,5	VR3	R	**402202**
		198	6	10,5	6,5	d_1 + 5	d_1 + 20	8 ± 1,5	VR3	V	**402206**
		198	14,3	25	15	d_1 + 10	d_1 + 45	20 ± 4	VR1	R	**402200**
		198	14,3	25	15	d_1 + 10	d_1 + 45	20 ± 4	VR1	V	**402204**
233	**260**	225	6	10,5	6,5	d_1 + 5	d_1 + 20	8 ± 1,5	VR3	R	**402502**
		225	6	10,5	6,5	d_1 + 5	d_1 + 20	8 ± 1,5	VR3	V	**402506**
235	**265**	225	14,3	25	15	d_1 + 10	d_1 + 45	20 ± 4	VR1	R	**402500**
		225	14,3	25	15	d_1 + 10	d_1 + 45	20 ± 4	VR1	V	**402504**
260	**285**	247	6	10,5	6,5	d_1 + 5	d_1 + 20	8 ± 1,5	VR3	R	**402752**
		247	6	10,5	6,5	d_1 + 5	d_1 + 20	8 ± 1,5	VR3	V	**402756**
265	**290**	247	14,3	25	15	d_1 + 10	d_1 + 45	20 ± 4	VR1	R	**402750**
		247	14,3	25	15	d_1 + 10	d_1 + 45	20 ± 4	VR1	V	**402754**
285	**310**	270	6	10,5	6,5	d_1 + 5	d_1 + 20	8 ± 1,5	VR3	R	**403002**
		270	6	10,5	6,5	d_1 + 5	d_1 + 20	8 ± 1,5	VR3	V	**403006**
290	**310**	270	14,3	25	15	d_1 + 10	d_1 + 45	20 ± 4	VR1	R	**403000**
		270	14,3	25	15	d_1 + 10	d_1 + 45	20 ± 4	VR1	V	**403004**
300	**305**	294	32,5	65	30	d_1 + 24	d_1 + 115	50 ± 12	VR4	R	**403003**
		294	32,5	65	21	d_1 + 24	d_1 + 115	50 ± 12	VR6	R	**470301**
305	**310**	299	32,5	65	30	d_1 + 24	d_1 + 115	50 ± 12	VR4	R	**403053**
		299	32,5	65	21	d_1 + 24	d_1 + 115	50 ± 12	VR6	R	**470306**
310	**335**	292	6	10,5	6,5	d_1 + 5	d_1 + 20	8 ± 1,5	VR3	R	**403252**
		292	6	10,5	6,5	d_1 + 5	d_1 + 20	8 ± 1,5	VR3	V	**403256**
310	**335**	292	14,3	25	15	d_1 + 10	d_1 + 45	20 ± 4	VR1	R	**403250**
		292	14,3	25	15	d_1 + 10	d_1 + 45	20 ± 4	VR1	V	**403254**
310	**315**	304	32,5	65	30	d_1 + 24	d_1 + 115	50 ± 12	VR4	R	**403103**
		304	32,5	65	21	d_1 + 24	d_1 + 115	50 ± 12	VR6	R	**470311**
315	**320**	309	32,5	65	30	d_1 + 24	d_1 + 115	50 ± 12	VR4	R	**403153**
		309	32,5	65	21	d_1 + 24	d_1 + 115	50 ± 12	VR6	R	**470316**

Dimensions Shaft diameter range d_1 over	incl.	Seal inside diameter, free state d	Seal seat width b_1	Nominal seal width b	Nominal seal height c	Clearance D_1 max.	Counterface D min.	Seal fitted width B_1	Design	Lip code	Designation
mm									–	–	–
320	**325**	314	32,5	65	30	d_1 + 24	d_1 + 115	50 ± 12	VR4	R	**403203**
		314	32,5	65	21	d_1 + 24	d_1 + 115	50 ± 12	VR6	R	**470321**
325	**330**	319	32,5	65	30	d_1 + 24	d_1 + 115	50 ± 12	VR4	R	**403253**
		319	32,5	65	21	d_1 + 24	d_1 + 115	50 ± 12	VR6	R	**470326**
330	**335**	323	32,5	65	30	d_1 + 24	d_1 + 115	50 ± 12	VR4	R	**403303**
		323	32,5	65	21	d_1 + 24	d_1 + 115	50 ± 12	VR6	R	**470331**
335	**365**	315	6	10,5	6,5	d_1 + 5	d_1 + 20	8 ± 1,5	VR3	R	**403502**
		315	6	10,5	6,5	d_1 + 5	d_1 + 20	8 ± 1,5	VR3	V	**403506**
		315	14,3	25	15	d_1 + 10	d_1 + 45	20 ± 4	VR1	R	**403500**
		315	14,3	25	15	d_1 + 10	d_1 + 45	20 ± 4	VR1	V	**403504**
335	**340**	328	32,5	65	30	d_1 + 24	d_1 + 115	50 ± 12	VR4	R	**403353**
		328	32,5	65	21	d_1 + 24	d_1 + 115	50 ± 12	VR6	R	**470336**
340	**345**	333	32,5	65	30	d_1 + 24	d_1 + 115	50 ± 12	VR4	R	**403403**
		328	32,5	65	21	d_1 + 24	d_1 + 115	50 ± 12	VR6	R	**470341**
345	**350**	338	32,5	65	30	d_1 + 24	d_1 + 115	50 ± 12	VR4	R	**403453**
		338	32,5	65	21	d_1 + 24	d_1 + 115	50 ± 12	VR6	R	**470346**
350	**355**	343	32,5	65	30	d_1 + 24	d_1 + 115	50 ± 12	VR4	R	**403503**
		343	32,5	65	21	d_1 + 24	d_1 + 115	50 ± 12	VR6	R	**470351**
355	**360**	347	32,5	65	30	d_1 + 24	d_1 + 115	50 ± 12	VR4	R	**403553**
		347	32,5	65	21	d_1 + 24	d_1 + 115	50 ± 12	VR6	R	**470356**
360	**365**	352	32,5	65	30	d_1 + 24	d_1 + 115	50 ± 12	VR4	R	**403603**
		357	32,5	65	21	d_1 + 24	d_1 + 115	50 ± 12	VR6	R	**470361**
365	**385**	337	6	10,5	6,5	d_1 + 5	d_1 + 20	8 ± 1,5	VR3	R	**403752**
		337	6	10,5	6,5	d_1 + 5	d_1 + 20	8 ± 1,5	VR3	V	**403756**
365	**390**	337	14,3	25	15	d_1 + 10	d_1 + 45	20 ± 4	VR1	R	**403750**
		337	14,3	25	15	d_1 + 10	d_1 + 45	20 ± 4	VR1	V	**403754**
		357	32,5	65	30	d_1 + 24	d_1 + 115	50 ± 12	VR4	R	**403653**
370	**375**	362	32,5	65	30	d_1 + 24	d_1 + 115	50 ± 12	VR4	R	**403703**
		362	32,5	65	21	d_1 + 24	d_1 + 115	50 ± 12	VR6	R	**470371**
375	**380**	367	32,5	65	30	d_1 + 24	d_1 + 115	50 ± 12	VR4	R	**403753**
		367	32,5	65	21	d_1 + 24	d_1 + 115	50 ± 12	VR6	R	**470376**
380	**385**	371	32,5	65	30	d_1 + 24	d_1 + 115	50 ± 12	VR4	R	**403803**
		371	32,5	65	21	d_1 + 24	d_1 + 115	50 ± 12	VR6	R	**470381**
385	**410**	360	6	10,5	6,5	d_1 + 5	d_1 + 20	8 ± 1,5	VR3	R	**404002**
		360	6	10,5	6,5	d_1 + 5	d_1 + 20	8 ± 1,5	VR3	V	**4040066**
390	**430**	360	14,3	25	15	d_1 + 10	d_1 + 45	20 ± 4	VR1	R	**404000**
		360	14,3	25	15	d_1 + 10	d_1 + 45	20 ± 4	VR1	V	**4040044**
385	**390**	376	32,5	65	30	d_1 + 24	d_1 + 115	50 ± 12	VR4	R	**403853**
		376	32,5	65	21	d_1 + 24	d_1 + 115	50 ± 12	VR6	R	**470386**
390	**395**	381	32,5	65	30	d_1 + 24	d_1 + 115	50 ± 12	VR4	R	**403903**
		381	32,5	65	21	d_1 + 24	d_1 + 115	50 ± 12	VR6	R	**470391**
395	**400**	386	32,5	65	30	d_1 + 24	d_1 + 115	50 ± 12	VR4	R	**403953**
		386	32,5	65	21	d_1 + 24	d_1 + 115	50 ± 12	VR6	R	**470396**
400	**405**	391	32,5	65	30	d_1 + 24	d_1 + 115	50 ± 12	VR4	R	**4040033**
		391	32,5	65	21	d_1 + 24	d_1 + 115	50 ± 12	VR6	R	**470401**
405	**410**	396	32,5	65	30	d_1 + 24	d_1 + 115	50 ± 12	VR4	R	**404053**
		396	32,5	65	21	d_1 + 24	d_1 + 115	50 ± 12	VR6	R	**470406**

d_1 **410–560** mm

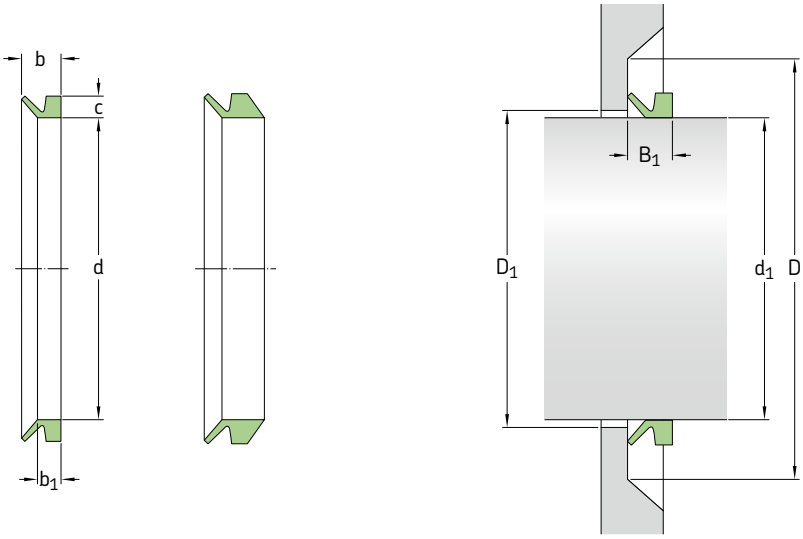

Dimensions Shaft diameter range d_1 over	incl.	Seal inside diameter, free state d	Seal seat width b_1	Nominal seal width b	Nominal seal height c	Clearance D_1 max.	Counterface D min.	Seal fitted width B_1	Design	Lip code	Designation
mm									–	–	–
410	**415**	401	32,5	65	30	d_1 + 24	d_1 + 115	50 ± 12	VR4	R	**404103**
		401	32,5	65	21	d_1 + 24	d_1 + 115	50 ± 12	VR6	R	**470411**
415	**420**	405	32,5	65	30	d_1 + 24	d_1 + 115	50 ± 12	VR4	R	**404153**
		405	32,5	65	21	d_1 + 24	d_1 + 115	50 ± 12	VR6	R	**470416**
420	**425**	410	32,5	65	30	d_1 + 24	d_1 + 115	50 ± 12	VR4	R	**404203**
		410	32,5	65	21	d_1 + 24	d_1 + 115	50 ± 12	VR6	R	**470421**
425	**430**	415	32,5	65	30	d_1 + 24	d_1 + 115	50 ± 12	VR4	R	**404253**
		415	32,5	65	21	d_1 + 24	d_1 + 115	50 ± 12	VR6	R	**470426**
410	**440**	382	6	10,5	6,5	d_1 + 5	d_1 + 20	8 ± 1,5	VR3	R	**404252**
		382	6	10,5	6,5	d_1 + 5	d_1 + 20	8 ± 1,5	VR3	V	**404256**
440	**475**	405	6	10,5	6,5	d_1 + 5	d_1 + 20	8 ± 1,5	VR3	R	**404502**
		405	6	10,5	6,5	d_1 + 5	d_1 + 20	8 ± 1,5	VR3	V	**404506**
430	**480**	405	14,3	25	15	d_1 + 10	d_1 + 45	20 ± 4	VR1	R	**404500**
		405	14,3	25	15	d_1 + 10	d_1 + 45	20 ± 4	VR1	V	**404504**
430	**435**	420	32,5	65	30	d_1 + 24	d_1 + 115	50 ± 12	VR4	R	**404303**
		420	32,5	65	21	d_1 + 24	d_1 + 115	50 ± 12	VR6	R	**470431**
435	**440**	425	32,5	65	30	d_1 + 24	d_1 + 115	50 ± 12	VR4	R	**404353**
		425	32,5	65	21	d_1 + 24	d_1 + 115	50 ± 12	VR6	R	**470436**
440	**445**	429	32,5	65	30	d_1 + 24	d_1 + 115	50 ± 12	VR4	R	**4044033**
		429	32,5	65	21	d_1 + 24	d_1 + 115	50 ± 12	VR6	R	**470441**
445	**450**	434	32,5	65	30	d_1 + 24	d_1 + 115	50 ± 12	VR4	R	**404453**
		434	32,5	65	21	d_1 + 24	d_1 + 115	50 ± 12	VR6	R	**470446**
450	**455**	439	32,5	65	30	d_1 + 24	d_1 + 115	50 ± 12	VR4	R	**404503**
		439	32,5	65	21	d_1 + 24	d_1 + 115	50 ± 12	VR6	R	**470451**
455	**460**	444	32,5	65	30	d_1 + 24	d_1 + 115	50 ± 12	VR4	R	**404553**
		444	32,5	65	21	d_1 + 24	d_1 + 115	50 ± 12	VR6	R	**470456**
460	**465**	448	32,5	65	30	d_1 + 24	d_1 + 115	50 ± 12	VR4	R	**4046033**
		448	32,5	65	21	d_1 + 24	d_1 + 115	50 ± 12	VR6	R	**470461**
465	**470**	453	32,5	65	30	d_1 + 24	d_1 + 115	50 ± 12	VR4	R	**404653**
		453	32,5	65	21	d_1 + 24	d_1 + 115	50 ± 12	VR6	R	**470466**

Dimensions Shaft diameter range d_1 over	incl.	Seal inside diameter, free state d	Seal seat width b_1	Nominal seal width b	Nominal seal height c	Clearance D_1 max.	Counterface D min.	Seal fitted width B_1	Design	Lip code	Designation
mm									–	–	–
470	**475**	458	32,5	65	30	$d_1 + 24$	$d_1 + 115$	50 ± 12	VR4	R	**404703**
		458	32,5	65	21	$d_1 + 24$	$d_1 + 115$	50 ± 12	VR6	R	**470471**
475	**480**	463	32,5	65	30	$d_1 + 24$	$d_1 + 115$	50 ± 12	VR4	R	**404753**
		463	32,5	65	21	$d_1 + 24$	$d_1 + 115$	50 ± 12	VR6	R	**470476**
475	**510**	450	6	10,5	6,5	$d_1 + 5$	$d_1 + 20$	8 ± 1,5	VR3	R	**405002**
		450	6	10,5	6,5	$d_1 + 5$	$d_1 + 20$	8 ± 1,5	VR3	V	**405009**
510	**540**	472	6	10,5	6,5	$d_1 + 5$	$d_1 + 20$	8 ± 1,5	VR3	R	**405252**
		472	6	10,5	6,5	$d_1 + 5$	$d_1 + 20$	8 ± 1,5	VR3	V	**405256**
480	**530**	450	14,3	25	15	$d_1 + 10$	$d_1 + 45$	20 ± 4	VR1	R	**405000**
		450	14,3	25	15	$d_1 + 10$	$d_1 + 45$	20 ± 4	VR1	V	**405004**
480	**485**	468	32,5	65	30	$d_1 + 24$	$d_1 + 115$	50 ± 12	VR4	R	**404803**
		468	32,5	65	21	$d_1 + 24$	$d_1 + 115$	50 ± 12	VR6	R	**470481**
485	**490**	473	32,5	65	30	$d_1 + 24$	$d_1 + 115$	50 ± 12	VR4	R	**404853**
		473	32,5	65	21	$d_1 + 24$	$d_1 + 115$	50 ± 12	VR6	R	**470486**
490	**495**	478	32,5	65	30	$d_1 + 24$	$d_1 + 115$	50 ± 12	VR4	R	**404903**
		478	32,5	65	21	$d_1 + 24$	$d_1 + 115$	50 ± 12	VR6	R	**470491**
495	**500**	483	32,5	65	30	$d_1 + 24$	$d_1 + 115$	50 ± 12	VR4	R	**404953**
		483	32,5	65	21	$d_1 + 24$	$d_1 + 115$	50 ± 12	VR6	R	**470496**
500	**505**	488	32,5	65	30	$d_1 + 24$	$d_1 + 115$	50 ± 12	VR4	R	**405003**
		488	32,5	65	21	$d_1 + 24$	$d_1 + 115$	50 ± 12	VR6	R	**470501**
505	**510**	493	32,5	65	30	$d_1 + 24$	$d_1 + 115$	50 ± 12	VR4	R	**405053**
		493	32,5	65	21	$d_1 + 24$	$d_1 + 115$	50 ± 12	VR6	R	**470506**
510	**515**	497	32,5	65	30	$d_1 + 24$	$d_1 + 115$	50 ± 12	VR4	R	**405103**
		497	32,5	65	21	$d_1 + 24$	$d_1 + 115$	50 ± 12	VR6	R	**470511**
515	**520**	502	32,5	65	30	$d_1 + 24$	$d_1 + 115$	50 ± 12	VR4	R	**405153**
		502	32,5	65	21	$d_1 + 24$	$d_1 + 115$	50 ± 12	VR6	R	**470516**
520	**525**	507	32,5	65	30	$d_1 + 24$	$d_1 + 115$	50 ± 12	VR4	R	**405203**
		507	32,5	65	21	$d_1 + 24$	$d_1 + 115$	50 ± 12	VR6	R	**470521**
525	**530**	512	32,5	65	30	$d_1 + 24$	$d_1 + 115$	50 ± 12	VR4	R	**405253**
		512	32,5	65	21	$d_1 + 24$	$d_1 + 115$	50 ± 12	VR6	R	**470526**
540	**575**	495	6	10,5	6,5	$d_1 + 5$	$d_1 + 20$	8 ± 1,5	VR3	R	**405502**
		495	6	10,5	6,5	$d_1 + 5$	$d_1 + 20$	8 ± 1,5	VR3	V	**405506**
530	**580**	495	14,3	25	15	$d_1 + 10$	$d_1 + 45$	20 ± 4	VR1	R	**405500**
		495	14,3	25	15	$d_1 + 10$	$d_1 + 45$	20 ± 4	VR1	V	**405504**
530	**535**	517	32,5	65	30	$d_1 + 24$	$d_1 + 115$	50 ± 12	VR4	R	**405303**
		517	32,5	65	21	$d_1 + 24$	$d_1 + 115$	50 ± 12	VR6	R	**470531**
535	**540**	521	32,5	65	30	$d_1 + 24$	$d_1 + 115$	50 ± 12	VR4	R	**405353**
		521	32,5	65	21	$d_1 + 24$	$d_1 + 115$	50 ± 12	VR6	R	**470536**
540	**545**	526	32,5	65	30	$d_1 + 24$	$d_1 + 115$	50 ± 12	VR4	R	**405403**
		526	32,5	65	21	$d_1 + 24$	$d_1 + 115$	50 ± 12	VR6	R	**470541**
545	**550**	531	32,5	65	30	$d_1 + 24$	$d_1 + 115$	50 ± 12	VR4	R	**405453**
		531	32,5	65	21	$d_1 + 24$	$d_1 + 115$	50 ± 12	VR6	R	**470546**
550	**555**	536	32,5	65	30	$d_1 + 24$	$d_1 + 115$	50 ± 12	VR4	R	**405503**
		536	32,5	65	21	$d_1 + 24$	$d_1 + 115$	50 ± 12	VR6	R	**470551**
555	**560**	541	32,5	65	30	$d_1 + 24$	$d_1 + 115$	50 ± 12	VR4	R	**405553**
		541	32,5	65	21	$d_1 + 24$	$d_1 + 115$	50 ± 12	VR6	R	**470556**

d_1 **560–825** mm

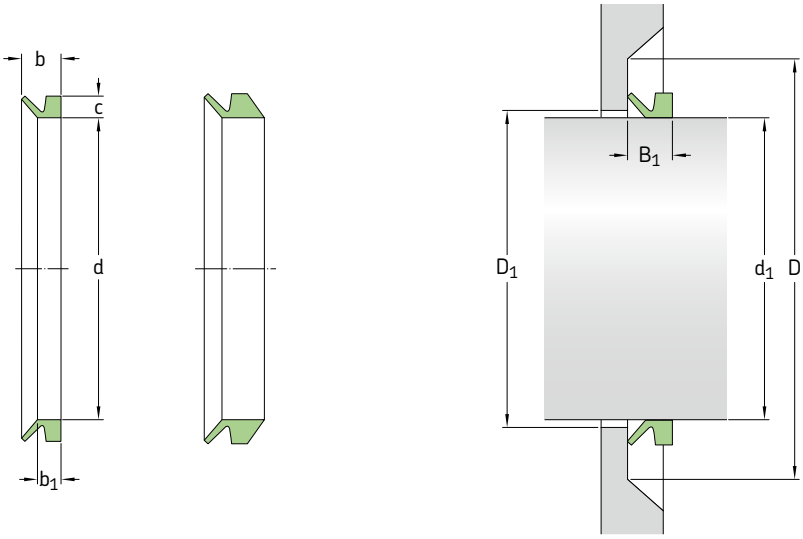

Dimensions Shaft diameter range d_1 over	incl.	Seal inside diameter, free state d	Seal seat width b_1	Nominal seal width b	Nominal seal height c	Clearance D_1 max.	Counterface D min.	Seal fitted width B_1	Design	Lip code	Designation
mm									–	–	–
560	**565**	546	32,5	65	30	d_1 + 24	d_1 + 115	50 ± 12	VR4	R	**405603**
		546	32,5	65	21	d_1 + 24	d_1 + 115	50 ± 12	VR6	R	**470561**
565	**570**	550	32,5	65	30	d_1 + 24	d_1 + 115	50 ± 12	VR4	R	**405653**
		550	32,5	65	21	d_1 + 24	d_1 + 115	50 ± 12	VR6	R	**470566**
570	**575**	555	32,5	65	30	d_1 + 24	d_1 + 115	50 ± 12	VR4	R	**405703**
		555	32,5	65	21	d_1 + 24	d_1 + 115	50 ± 12	VR6	R	**470571**
575	**580**	560	32,5	65	30	d_1 + 24	d_1 + 115	50 ± 12	VR4	R	**405753**
		560	32,5	65	21	d_1 + 24	d_1 + 115	50 ± 12	VR6	R	**470576**
575	**625**	540	6	10,5	6,5	d_1 + 5	d_1 + 20	8 ± 1,5	VR3	R	**4060022**
		540	6	10,5	6,5	d_1 + 5	d_1 + 20	8 ± 1,5	VR3	V	**406006**
580	**630**	540	14,3	25	15	d_1 + 10	d_1 + 45	20 ± 4	VR1	R	**406000**
		540	14,3	25	15	d_1 + 10	d_1 + 45	20 ± 4	VR1	V	**4060044**
580	**585**	565	32,5	65	30	d_1 + 24	d_1 + 115	50 ± 12	VR4	R	**405803**
		565	32,5	65	21	d_1 + 24	d_1 + 115	50 ± 12	VR6	R	**470581**
585	**590**	570	32,5	65	30	d_1 + 24	d_1 + 115	50 ± 12	VR4	R	**405853**
		570	32,5	65	21	d_1 + 24	d_1 + 115	50 ± 12	VR6	R	**470586**
590	**600**	575	32,5	65	30	d_1 + 24	d_1 + 115	50 ± 12	VR4	R	**405903**
		575	32,5	65	21	d_1 + 24	d_1 + 115	50 ± 12	VR6	R	**470591**
600	**610**	582	32,5	65	30	d_1 + 24	d_1 + 115	50 ± 12	VR4	R	**406003**
		582	32,5	65	21	d_1 + 24	d_1 + 115	50 ± 12	VR6	R	**470601**
610	**620**	592	32,5	65	30	d_1 + 24	d_1 + 115	50 ± 12	VR4	R	**4061033**
		592	32,5	65	21	d_1 + 24	d_1 + 115	50 ± 12	VR6	R	**470611**
620	**630**	602	32,5	65	30	d_1 + 24	d_1 + 115	50 ± 12	VR4	R	**4062033**
		602	32,5	65	21	d_1 + 24	d_1 + 115	50 ± 12	VR6	R	**470621**
615	**675**	600	6	10,5	6,5	d_1 + 5	d_1 + 20	8 ± 1,5	VR3	R	**406502**
		600	6	10,5	6,5	d_1 + 5	d_1 + 20	8 ± 1,5	VR3	V	**406506**
630	**665**	600	14,3	25	15	d_1 + 10	d_1 + 45	20 ± 4	VR1	R	**406500**
		600	14,3	25	15	d_1 + 10	d_1 + 45	20 ± 4	VR1	V	**406504**
630	**640**	612	32,5	65	30	d_1 + 24	d_1 + 115	50 ± 12	VR4	R	**4063033**
		612	32,5	65	21	d_1 + 24	d_1 + 115	50 ± 12	VR6	R	**470631**

Dimensions Shaft diameter range d_1 over	incl.	Seal inside diameter, free state d	Seal seat width b_1	Nominal seal width b	Nominal seal height c	Clearance D_1 max.	Counterface D min.	Seal fitted width B_1	Design	Lip code	Designation
mm									–	–	–
640	**650**	621	32,5	65	30	d_1 + 24	d_1 + 115	50 ± 12	VR4	R	**4064033**
		621	32,5	65	21	d_1 + 24	d_1 + 115	50 ± 12	VR6	R	**470641**
650	**660**	631	32,5	65	30	d_1 + 24	d_1 + 115	50 ± 12	VR4	R	**406503**
		631	32,5	65	21	d_1 + 24	d_1 + 115	50 ± 12	VR6	R	**470651**
660	**670**	640	32,5	65	30	d_1 + 24	d_1 + 115	50 ± 12	VR4	R	**4066033**
		640	32,5	65	21	d_1 + 24	d_1 + 115	50 ± 12	VR6	R	**470661**
675	**710**	630	6	10,5	6,5	d_1 + 5	d_1 + 20	8 ± 1,5	VR3	R	**407002**
		630	6	10,5	6,5	d_1 + 5	d_1 + 20	8 ± 1,5	VR3	V	**407006**
665	**705**	630	14,3	25	15	d_1 + 10	d_1 + 45	20 ± 4	VR1	R	**407000**
		630	14,3	25	15	d_1 + 10	d_1 + 45	20 ± 4	VR1	V	**407004**
670	**680**	650	32,5	65	30	d_1 + 24	d_1 + 115	50 ± 12	VR4	R	**406703**
		650	32,5	65	21	d_1 + 24	d_1 + 115	50 ± 12	VR6	R	**470671**
680	**690**	660	32,5	65	30	d_1 + 24	d_1 + 115	50 ± 12	VR4	R	**406803**
		660	32,5	65	21	d_1 + 24	d_1 + 115	50 ± 12	VR6	R	**470681**
690	**700**	670	32,5	65	30	d_1 + 24	d_1 + 115	50 ± 12	VR4	R	**406903**
		670	32,5	65	21	d_1 + 24	d_1 + 115	50 ± 12	VR6	R	**470691**
700	**710**	680	32,5	65	30	d_1 + 24	d_1 + 115	50 ± 12	VR4	R	**407003**
		680	32,5	65	21	d_1 + 24	d_1 + 115	50 ± 12	VR6	R	**470701**
710	**740**	670	6	10,5	6,5	d_1 + 5	d_1 + 20	8 ± 1,5	VR3	R	**407252**
		670	6	10,5	6,5	d_1 + 5	d_1 + 20	8 ± 1,5	VR3	V	**407256**
705	**745**	670	14,3	25	15	d_1 + 10	d_1 + 45	20 ± 4	VR1	R	**407250**
		670	14,3	25	15	d_1 + 10	d_1 + 45	20 ± 4	VR1	V	**407254**
710	**720**	689	32,5	65	30	d_1 + 24	d_1 + 115	50 ± 12	VR4	R	**407103**
		689	32,5	65	21	d_1 + 24	d_1 + 115	50 ± 12	VR6	R	**470711**
720	**730**	699	32,5	65	30	d_1 + 24	d_1 + 115	50 ± 12	VR4	R	**407203**
		699	32,5	65	21	d_1 + 24	d_1 + 115	50 ± 12	VR6	R	**470721**
730	**740**	709	32,5	65	30	d_1 + 24	d_1 + 115	50 ± 12	VR4	R	**407309**
		709	32,5	65	21	d_1 + 24	d_1 + 115	50 ± 12	VR6	R	**470731**
740	**750**	718	32,5	65	30	d_1 + 24	d_1 + 115	50 ± 12	VR4	R	**407403**
		718	32,5	65	21	d_1 + 24	d_1 + 115	50 ± 12	VR6	R	**470741**
740	**775**	705	6	10,5	6,5	d_1 + 5	d_1 + 20	8 ± 1,5	VR3	R	**407502**
		705	6	10,5	6,5	d_1 + 5	d_1 + 20	8 ± 1,5	VR3	V	**407506**
745	**785**	705	14,3	25	15	d_1 + 10	d_1 + 45	20 ± 4	VR1	R	**407500**
		705	14,3	25	15	d_1 + 10	d_1 + 45	20 ± 4	VR1	V	**407504**
750	**758**	728	32,5	65	30	d_1 + 24	d_1 + 115	50 ± 12	VR4	R	**407503**
		728	32,5	65	21	d_1 + 24	d_1 + 115	50 ± 12	VR6	R	**470751**
758	**766**	735	32,5	65	30	d_1 + 24	d_1 + 115	50 ± 12	VR4	R	**407603**
		735	32,5	65	21	d_1 + 24	d_1 + 115	50 ± 12	VR6	R	**470761**
766	**774**	743	32,5	65	30	d_1 + 24	d_1 + 115	50 ± 12	VR4	R	**407703**
		743	32,5	65	21	d_1 + 24	d_1 + 115	50 ± 12	VR6	R	**470771**
774	**783**	751	32,5	65	30	d_1 + 24	d_1 + 115	50 ± 12	VR4	R	**407803**
		751	32,5	65	21	d_1 + 24	d_1 + 115	50 ± 12	VR6	R	**470781**
783	**792**	759	32,5	65	30	d_1 + 24	d_1 + 115	50 ± 12	VR4	R	**407903**
		759	32,5	65	21	d_1 + 24	d_1 + 115	50 ± 12	VR6	R	**470791**
775	**825**	745	6	10,5	6,5	d_1 + 5	d_1 + 20	8 ± 1,5	VR3	R	**408002**
		745	6	10,5	6,5	d_1 + 5	d_1 + 20	8 ± 1,5	VR3	V	**408006**

d_1 **785–1125** mm

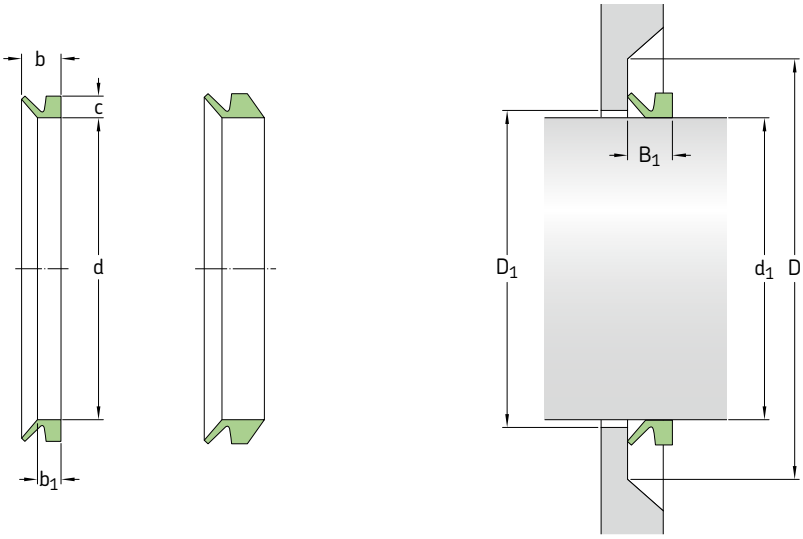

Dimensions Shaft diameter range d_1 over	incl.	Seal inside diameter, free state d	Seal seat width b_1	Nominal seal width b	Nominal seal height c	Clearance D_1 max.	Counterface D min.	Seal fitted width B_1	Design	Lip code	Designation
mm									–	–	–
785	**830**	745	14,3	25	15	d_1 + 10	d_1 + 45	20 ± 4	VR1	R	**408000**
		745	14,3	25	15	d_1 + 10	d_1 + 45	20 ± 4	VR1	V	**408004**
792	**801**	768	32,5	65	30	d_1 + 24	d_1 + 115	50 ± 12	VR4	R	**408003**
		768	32,5	65	21	d_1 + 24	d_1 + 115	50 ± 12	VR6	R	**470801**
801	**810**	777	32,5	65	30	d_1 + 24	d_1 + 115	50 ± 12	VR4	R	**408103**
		777	32,5	65	21	d_1 + 24	d_1 + 115	50 ± 12	VR6	R	**470811**
810	**821**	786	32,5	65	30	d_1 + 24	d_1 + 115	50 ± 12	VR4	R	**408203**
		786	32,5	65	21	d_1 + 24	d_1 + 115	50 ± 12	VR6	R	**470821**
821	**831**	796	32,5	65	30	d_1 + 24	d_1 + 115	50 ± 12	VR4	R	**408303**
		796	32,5	65	21	d_1 + 24	d_1 + 115	50 ± 12	VR6	R	**470831**
825	**875**	785	6	10,5	6,5	d_1 + 5	d_1 + 20	8 ± 1,5	VR3	R	**408502**
		785	6	10,5	6,5	d_1 + 5	d_1 + 20	8 ± 1,5	VR3	V	**408506**
830	**875**	785	14,3	25	15	d_1 + 10	d_1 + 45	20 ± 4	VR1	R	**408500**
		785	14,3	25	15	d_1 + 10	d_1 + 45	20 ± 4	VR1	V	**408504**
831	**841**	805	32,5	65	30	d_1 + 24	d_1 + 115	50 ± 12	VR4	R	**408403**
		805	32,5	65	21	d_1 + 24	d_1 + 115	50 ± 12	VR6	R	**470841**
841	**851**	814	32,5	65	30	d_1 + 24	d_1 + 115	50 ± 12	VR4	R	**408503**
		814	32,5	65	21	d_1 + 24	d_1 + 115	50 ± 12	VR6	R	**470851**
851	**861**	824	32,5	65	30	d_1 + 24	d_1 + 115	50 ± 12	VR4	R	**408603**
		824	32,5	65	21	d_1 + 24	d_1 + 115	50 ± 12	VR6	R	**470861**
861	**871**	833	32,5	65	30	d_1 + 24	d_1 + 115	50 ± 12	VR4	R	**408703**
		833	32,5	65	21	d_1 + 24	d_1 + 115	50 ± 12	VR6	R	**470871**
871	**882**	843	32,5	65	30	d_1 + 24	d_1 + 115	50 ± 12	VR4	R	**408803**
		843	32,5	65	21	d_1 + 24	d_1 + 115	50 ± 12	VR6	R	**470881**
875	**925**	825	6	10,5	6,5	d_1 + 5	d_1 + 20	8 ± 1,5	VR3	R	**409002**
		825	6	10,5	6,5	d_1 + 5	d_1 + 20	8 ± 1,5	VR3	V	**409006**
875	**920**	825	14,3	25	15	d_1 + 10	d_1 + 45	20 ± 4	VR1	R	**409000**
		825	14,3	25	15	d_1 + 10	d_1 + 45	20 ± 4	VR1	V	**409004**
882	**892**	853	32,5	65	30	d_1 + 24	d_1 + 115	50 ± 12	VR4	R	**408903**
		853	32,5	65	21	d_1 + 24	d_1 + 115	50 ± 12	VR6	R	**470891**

Dimensions Shaft diameter range d_1 over	incl.	Seal inside diameter, free state d	Seal seat width b_1	Nominal seal width b	Nominal seal height c	Clearance D_1 max.	Counterface D min.	Seal fitted width B_1	Design	Lip code	Designation
mm									–	–	–
892	**912**	871	32,5	65	30	d_1 + 24	d_1 + 115	50 ± 12	VR4	R	**409003**
		871	32,5	65	21	d_1 + 24	d_1 + 115	50 ± 12	VR6	R	**470901**
912	**922**	880	32,5	65	30	d_1 + 24	d_1 + 115	50 ± 12	VR4	R	**409203**
		880	32,5	65	21	d_1 + 24	d_1 + 115	50 ± 12	VR6	R	**470921**
925	**975**	865	6	10,5	6,5	d_1 + 5	d_1 + 20	8 ± 1,5	VR3	R	**409502**
		865	6	10,5	6,5	d_1 + 5	d_1 + 20	8 ± 1,5	VR3	V	**409506**
920	**965**	865	14,3	25	15	d_1 + 10	d_1 + 45	20 ± 4	VR1	R	**409500**
		865	14,3	25	15	d_1 + 10	d_1 + 45	20 ± 4	VR1	V	**409504**
922	**933**	890	32,5	65	30	d_1 + 24	d_1 + 115	50 ± 12	VR4	R	**409303**
		890	32,5	65	21	d_1 + 24	d_1 + 115	50 ± 12	VR6	R	**470931**
933	**944**	900	32,5	65	30	d_1 + 24	d_1 + 115	50 ± 12	VR4	R	**409403**
		900	32,5	65	21	d_1 + 24	d_1 + 115	50 ± 12	VR6	R	**470941**
944	**955**	911	32,5	65	30	d_1 + 24	d_1 + 115	50 ± 12	VR4	R	**409503**
		911	32,5	65	21	d_1 + 24	d_1 + 115	50 ± 12	VR6	R	**470951**
955	**966**	921	32,5	65	30	d_1 + 24	d_1 + 115	50 ± 12	VR4	R	**409603**
		921	32,5	65	21	d_1 + 24	d_1 + 115	50 ± 12	VR6	R	**470961**
975	**1 025**	910	6	10,5	6,5	d_1 + 5	d_1 + 20	8 ± 1,5	VR3	R	**410002**
		910	6	10,5	6,5	d_1 + 5	d_1 + 20	8 ± 1,5	VR3	V	**410006**
965	**1 015**	910	14,3	25	15	d_1 + 10	d_1 + 45	20 ± 4	VR1	R	**410000**
		910	14,3	25	15	d_1 + 10	d_1 + 45	20 ± 4	VR1	V	**410004**
966	**977**	932	32,5	65	30	d_1 + 24	d_1 + 115	50 ± 12	VR4	R	**409703**
		932	32,5	65	21	d_1 + 24	d_1 + 115	50 ± 12	VR6	R	**470971**
977	**988**	942	32,5	65	30	d_1 + 24	d_1 + 115	50 ± 12	VR4	R	**409803**
		942	32,5	65	21	d_1 + 24	d_1 + 115	50 ± 12	VR6	R	**470981**
988	**999**	953	32,5	65	30	d_1 + 24	d_1 + 115	50 ± 12	VR4	R	**409903**
		953	32,5	65	21	d_1 + 24	d_1 + 115	50 ± 12	VR6	R	**470991**
999	**1 010**	963	32,5	65	30	d_1 + 24	d_1 + 115	50 ± 12	VR4	R	**410003**
		963	32,5	65	21	d_1 + 24	d_1 + 115	50 ± 12	VR6	R	**471001**
1 010	**1 025**	973	32,5	65	30	d_1 + 24	d_1 + 115	50 ± 12	VR4	R	**410203**
		973	32,5	65	21	d_1 + 24	d_1 + 115	50 ± 12	VR6	R	**471021**
1 025	**1 075**	955	6	10,5	6,5	d_1 + 5	d_1 + 20	8 ± 1,5	VR3	R	**410502**
		955	6	10,5	6,5	d_1 + 5	d_1 + 20	8 ± 1,5	VR3	V	**410506**
1 015	**1 065**	955	14,3	25	15	d_1 + 10	d_1 + 45	20 ± 4	VR1	R	**410500**
1 025	**1 045**	990	32,5	65	30	d_1 + 24	d_1 + 115	50 ± 12	VR4	R	**410403**
		990	32,5	65	21	d_1 + 24	d_1 + 115	50 ± 12	VR6	R	**471041**
1 045	**1 065**	1 008	32,5	65	30	d_1 + 24	d_1 + 115	50 ± 12	VR4	R	**410603**
		1 008	32,5	65	21	d_1 + 24	d_1 + 115	50 ± 12	VR6	R	**471061**
1 075	**1 125**	1 000	6	10,5	6,5	d_1 + 5	d_1 + 20	8 ± 1,5	VR3	R	**411002**
		1 000	6	10,5	6,5	d_1 + 5	d_1 + 20	8 ± 1,5	VR3	V	**411006**
1 065	**1 115**	1 000	14,3	25	15	d_1 + 10	d_1 + 45	20 ± 4	VR1	R	**411000**
		1 027	32,5	65	30	d_1 + 24	d_1 + 115	50 ± 12	VR4	R	**410803**
		1 027	32,5	65	21	d_1 + 24	d_1 + 115	50 ± 12	VR6	R	**471081**
1 085	**1 105**	1 045	32,5	65	30	d_1 + 24	d_1 + 115	50 ± 12	VR4	R	**411003**
		1 045	32,5	65	21	d_1 + 24	d_1 + 115	50 ± 12	VR6	R	**471101**
1 105	**1 125**	1 065	32,5	65	30	d_1 + 24	d_1 + 115	50 ± 12	VR4	R	**411203**
		1 065	32,5	65	21	d_1 + 24	d_1 + 115	50 ± 12	VR6	R	**471121**

d_1 **1 125–1640** mm

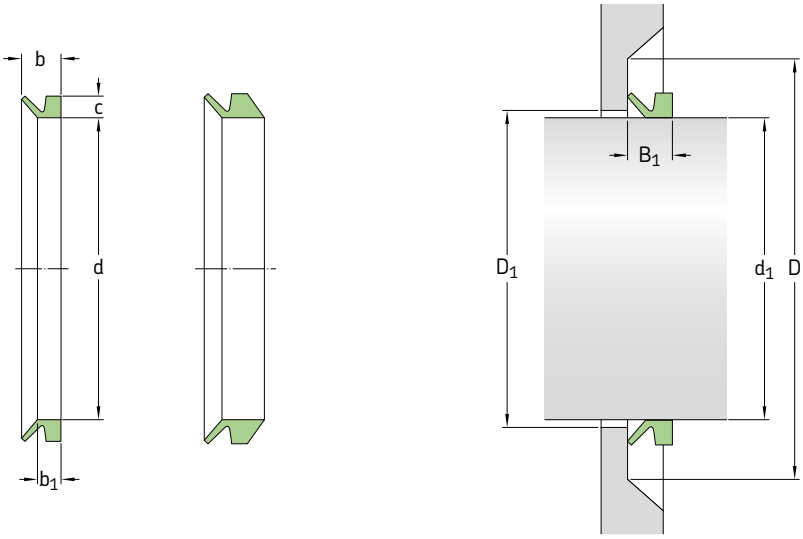

Dimensions Shaft diameter range d_1 over	 incl.	Seal inside diameter, free state d	Seal seat width b_1	Nominal seal width b	Nominal seal height c	Clearance D_1 max.	Counterface D min.	Seal fitted width B_1	Design	Lip code	Designation
mm									–	–	–
1 125	**1 175**	1 045	6	10,5	6,5	d_1 + 5	d_1 + 20	8 ± 1,5	VR3	R	**411502**
		1 045	6	10,5	6,5	d_1 + 5	d_1 + 20	8 ± 1,5	VR3	V	**411506**
1 115	**1 165**	1 045	14,3	25	15	d_1 + 10	d_1 + 45	20 ± 4	VR1	R	**411500**
1 125	**1 145**	1 084	32,5	65	30	d_1 + 24	d_1 + 115	50 ± 12	VR4	R	**411403**
		1 084	32,5	65	21	d_1 + 24	d_1 + 115	50 ± 12	VR6	R	**471141**
1 145	**1 165**	1 103	32,5	65	30	d_1 + 24	d_1 + 115	50 ± 12	VR4	R	**411603**
		1 103	32,5	65	21	d_1 + 24	d_1 + 115	50 ± 12	VR6	R	**471161**
1 175	**1 225**	1 090	6	10,5	6,5	d_1 + 5	d_1 + 20	8 ± 1,5	VR3	R	**412002**
		1 090	6	10,5	6,5	d_1 + 5	d_1 + 20	8 ± 1,5	VR3	V	**412006**
1 165	**1 215**	1 090	14,3	25	15	d_1 + 10	d_1 + 45	20 ± 4	VR1	R	**412000**
1 165	**1 185**	1 121	32,5	65	30	d_1 + 24	d_1 + 115	50 ± 12	VR4	R	**411803**
		1 121	32,5	65	21	d_1 + 24	d_1 + 115	50 ± 12	VR6	R	**471181**
1 185	**1 205**	1 139	32,5	65	30	d_1 + 24	d_1 + 115	50 ± 12	VR4	R	**412003**
		1 139	32,5	65	21	d_1 + 24	d_1 + 115	50 ± 12	VR6	R	**471201**
1 205	**1 225**	1 157	32,5	65	30	d_1 + 24	d_1 + 115	50 ± 12	VR4	R	**412203**
		1 157	32,5	65	21	d_1 + 24	d_1 + 115	50 ± 12	VR6	R	**471221**
1 225	**1 275**	1 135	6	10,5	6,5	d_1 + 5	d_1 + 20	8 ± 1,5	VR3	R	**412502**
		1 135	6	10,5	6,5	d_1 + 5	d_1 + 20	8 ± 1,5	VR3	V	**412506**
1 215	**1 270**	1 135	14,3	25	15	d_1 + 10	d_1 + 45	20 ± 4	VR1	R	**412500**
1 225	**1 245**	1 176	32,5	65	30	d_1 + 24	d_1 + 115	50 ± 12	VR4	R	**471240**
		1 176	32,5	65	21	d_1 + 24	d_1 + 115	50 ± 12	VR6	R	**471241**
1 245	**1 270**	1 195	32,5	65	30	d_1 + 24	d_1 + 115	50 ± 12	VR4	R	**412603**
		1 195	32,5	65	21	d_1 + 24	d_1 + 115	50 ± 12	VR6	R	**471261**
1 270	**1 295**	1 218	32,5	65	30	d_1 + 24	d_1 + 115	50 ± 12	VR4	R	**412803**
		1 218	32,5	65	21	d_1 + 24	d_1 + 115	50 ± 12	VR6	R	**471281**
1 275	**1 325**	1 180	6	10,5	6,5	d_1 + 5	d_1 + 20	8 ± 1,5	VR3	R	**413002**
		1 180	6	10,5	6,5	d_1 + 5	d_1 + 20	8 ± 1,5	VR3	V	**413006**
1 270	**1 320**	1 180	14,3	25	15	d_1 + 10	d_1 + 45	20 ± 4	VR1	R	**413000**

Dimensions									Design	Lip code	Designation
Shaft diameter range		Seal inside diameter, free state	Seal seat width	Nominal seal width	Nominal seal height	Clearance	Counterface	Seal fitted width			
d_1 over	incl.	d	b_1	b	c	D_1 max.	D min.	B_1			
mm									–	–	–
1 295	**1 315**	1 240	32,5	65	30	$d_1 + 24$	$d_1 + 115$	50 ± 12	VR4	R	**413003**
		1 240	32,5	65	21	$d_1 + 24$	$d_1 + 115$	50 ± 12	VR6	R	**471301**
1 315	**1 340**	1 259	32,5	65	30	$d_1 + 24$	$d_1 + 115$	50 ± 12	VR4	R	**413253**
		1 259	32,5	65	21	$d_1 + 24$	$d_1 + 115$	50 ± 12	VR6	R	**471326**
1 325	**1 375**	1 225	6	10,5	6,5	$d_1 + 5$	$d_1 + 20$	8 ± 1,5	VR3	R	**413502**
		1 225	6	10,5	6,5	$d_1 + 5$	$d_1 + 20$	8 ± 1,5	VR3	V	**413506**
1 320	**1 370**	1 225	14,3	25	15	$d_1 + 10$	$d_1 + 45$	20 ± 4	VR1	R	**413500**
1 340	**1 365**	1 281	32,5	65	30	$d_1 + 24$	$d_1 + 115$	50 ± 12	VR4	R	**413503**
		1 281	32,5	65	21	$d_1 + 24$	$d_1 + 115$	50 ± 12	VR6	R	**471351**
1 365	**1 390**	1 305	32,5	65	30	$d_1 + 24$	$d_1 + 115$	50 ± 12	VR4	R	**413753**
		1 305	32,5	65	21	$d_1 + 24$	$d_1 + 115$	50 ± 12	VR6	R	**471376**
1 375	**1 425**	1 270	6	10,5	6,5	$d_1 + 5$	$d_1 + 20$	8 ± 1,5	VR3	R	**414002**
		1 270	6	10,5	6,5	$d_1 + 5$	$d_1 + 20$	8 ± 1,5	VR3	V	**414006**
1 370	**1 420**	1 270	14,3	25	15	$d_1 + 10$	$d_1 + 45$	20 ± 4	VR1	R	**414000**
1 390	**1 415**	1 328	32,5	65	30	$d_1 + 24$	$d_1 + 115$	50 ± 12	VR4	R	**414003**
		1 328	32,5	65	21	$d_1 + 24$	$d_1 + 115$	50 ± 12	VR6	R	**471401**
1 415	**1 440**	1 350	32,5	65	30	$d_1 + 24$	$d_1 + 115$	50 ± 12	VR4	R	**414253**
		1 350	32,5	65	21	$d_1 + 24$	$d_1 + 115$	50 ± 12	VR6	R	**471426**
1 425	**1 475**	1 315	6	10,5	6,5	$d_1 + 5$	$d_1 + 20$	8 ± 1,5	VR3	R	**414502**
		1 315	6	10,5	6,5	$d_1 + 5$	$d_1 + 20$	8 ± 1,5	VR3	V	**414506**
1 420	**1 470**	1 315	14,3	25	15	$d_1 + 10$	$d_1 + 45$	20 ± 4	VR1	R	**414500**
1 440	**1 465**	1 374	32,5	65	30	$d_1 + 24$	$d_1 + 115$	50 ± 12	VR4	R	**414503**
		1 374	32,5	65	21	$d_1 + 24$	$d_1 + 115$	50 ± 12	VR6	R	**471451**
1 465	**1 490**	1 397	32,5	65	30	$d_1 + 24$	$d_1 + 115$	50 ± 12	VR4	R	**414753**
		1 397	32,5	65	21	$d_1 + 24$	$d_1 + 115$	50 ± 12	VR6	R	**471476**
1 475	**1 525**	1 360	6	10,5	6,5	$d_1 + 5$	$d_1 + 20$	8 ± 1,5	VR3	R	**415002**
		1 360	6	10,5	6,5	$d_1 + 5$	$d_1 + 20$	8 ± 1,5	VR3	V	**415006**
1 470	**1 520**	1 360	14,3	25	15	$d_1 + 10$	$d_1 + 45$	20 ± 4	VR1	R	**415000**
1 490	**1 515**	1 419	32,5	65	30	$d_1 + 24$	$d_1 + 115$	50 ± 12	VR4	R	**415003**
		1 419	32,5	65	21	$d_1 + 24$	$d_1 + 115$	50 ± 12	VR6	R	**471501**
1 515	**1 540**	1 443	32,5	65	30	$d_1 + 24$	$d_1 + 115$	50 ± 12	VR4	R	**415253**
		1 443	32,5	65	21	$d_1 + 24$	$d_1 + 115$	50 ± 12	VR6	R	**471526**
1 525	**1 575**	1 405	6	10,5	6,5	$d_1 + 5$	$d_1 + 20$	8 ± 1,5	VR3	R	**415502**
		1 405	6	10,5	6,5	$d_1 + 5$	$d_1 + 20$	8 ± 1,5	VR3	V	**415506**
1 520	**1 570**	1 405	14,3	25	15	$d_1 + 10$	$d_1 + 45$	20 ± 4	VR1	R	**415500**
1 540	**1 570**	1 467	32,5	65	30	$d_1 + 24$	$d_1 + 115$	50 ± 12	VR4	R	**415503**
		1 467	32,5	65	21	$d_1 + 24$	$d_1 + 115$	50 ± 12	VR6	R	**471551**
1 570	**1 600**	1 495	32,5	65	30	$d_1 + 24$	$d_1 + 115$	50 ± 12	VR4	R	**415753**
		1 495	32,5	65	21	$d_1 + 24$	$d_1 + 115$	50 ± 12	VR6	R	**471576**
1 575	**1 625**	1 450	6	10,5	6,5	$d_1 + 5$	$d_1 + 20$	8 ± 1,5	VR3	R	**416002**
		1 450	6	10,5	6,5	$d_1 + 5$	$d_1 + 20$	8 ± 1,5	VR3	V	**416006**
1 570	**1 620**	1 450	14,3	25	15	$d_1 + 10$	$d_1 + 45$	20 ± 4	VR1	R	**416000**
1 600	**1 640**	1 524	32,5	65	30	$d_1 + 24$	$d_1 + 115$	50 ± 12	VR4	R	**416003**
		1 524	32,5	65	21	$d_1 + 24$	$d_1 + 115$	50 ± 12	VR6	R	**471601**

d_1 **1 625–2 020** mm

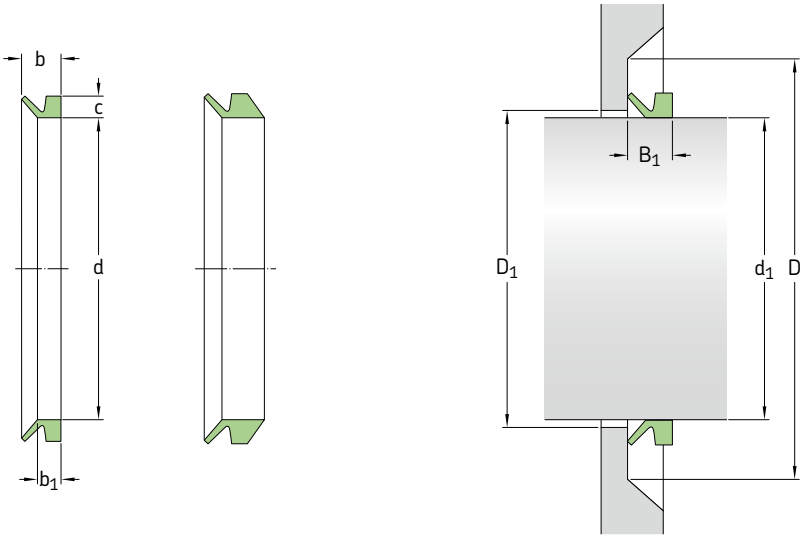

Dimensions Shaft diameter range d_1 over	 incl.	Seal inside diameter, free state d	Seal seat width b_1	Nominal seal width b	Nominal seal height c	Clearance D_1 max.	Counterface D min.	Seal fitted width B_1	Design	Lip code	Designation
mm									–	–	–
1 625	**1 675**	1 495	6	10,5	6,5	d_1 + 5	d_1 + 20	8 ± 1,5	VR3	R	**416502**
		1 495	6	10,5	6,5	d_1 + 5	d_1 + 20	8 ± 1,5	VR3	V	**416506**
1 620	**1 670**	1 495	14,3	25	15	d_1 + 10	d_1 + 45	20 ± 4	VR1	R	**416500**
1 640	**1 680**	1 559	32,5	65	30	d_1 + 24	d_1 + 115	50 ± 12	VR4	R	**416503**
		1 559	32,5	65	21	d_1 + 24	d_1 + 115	50 ± 12	VR6	R	**471651**
1 675	**1 725**	1 540	6	10,5	6,5	d_1 + 5	d_1 + 20	8 ± 1,5	VR3	R	**417002**
		1 540	6	10,5	6,5	d_1 + 5	d_1 + 20	8 ± 1,5	VR3	V	**417006**
1 670	**1 720**	1 540	14,3	25	15	d_1 + 10	d_1 + 45	20 ± 4	VR1	R	**417000**
1 680	**1 720**	1 596	32,5	65	30	d_1 + 24	d_1 + 115	50 ± 12	VR4	R	**417003**
		1 596	32,5	65	21	d_1 + 24	d_1 + 115	50 ± 12	VR6	R	**471701**
1 725	**1 775**	1 585	6	10,5	6,5	d_1 + 5	d_1 + 20	8 ± 1,5	VR3	R	**417502**
		1 585	6	10,5	6,5	d_1 + 5	d_1 + 20	8 ± 1,5	VR3	V	**417506**
1 720	**1 770**	1 585	14,3	25	15	d_1 + 10	d_1 + 45	20 ± 4	VR1	R	**417500**
1 720	**1 765**	1 632	32,5	65	30	d_1 + 24	d_1 + 115	50 ± 12	VR4	R	**417503**
		1 632	32,5	65	21	d_1 + 24	d_1 + 115	50 ± 12	VR6	R	**471751**
1 765	**1 810**	1 671	32,5	65	30	d_1 + 24	d_1 + 115	50 ± 12	VR4	R	**418003**
		1 671	32,5	65	21	d_1 + 24	d_1 + 115	50 ± 12	VR6	R	**471801**
1 775	**1 825**	1 630	6	10,5	6,5	d_1 + 5	d_1 + 20	8 ± 1,5	VR3	R	**418002**
		1 630	6	10,5	6,5	d_1 + 5	d_1 + 20	8 ± 1,5	VR3	V	**418006**
1 770	**1 820**	1 630	14,3	25	15	d_1 + 10	d_1 + 45	20 ± 4	VR1	R	**418000**
1 810	**1 855**	1 714	32,5	65	30	d_1 + 24	d_1 + 115	50 ± 12	VR4	R	**418503**
		1 714	32,5	65	21	d_1 + 24	d_1 + 115	50 ± 12	VR6	R	**471851**
1 825	**1 875**	1 675	6	10,5	6,5	d_1 + 5	d_1 + 20	8 ± 1,5	VR3	R	**418502**
		1 675	6	10,5	6,5	d_1 + 5	d_1 + 20	8 ± 1,5	VR3	V	**418506**
1 820	**1 870**	1 675	14,3	25	15	d_1 + 10	d_1 + 45	20 ± 4	VR1	R	**418500**
1 855	**1 905**	1 753	32,5	65	30	d_1 + 24	d_1 + 115	50 ± 12	VR4	R	**419003**
		1 753	32,5	65	21	d_1 + 24	d_1 + 115	50 ± 12	VR6	R	**471901**

Dimensions									Design	Lip code	Designation
Shaft diameter range		Seal inside diameter, free state	Seal seat width	Nominal seal width	Nominal seal height	Clearance	Counterface	Seal fitted width			
d_1 over	incl.	d	b_1	b	c	D_1 max.	D min.	B_1			
mm									–	–	–
1 875	**1 925**	1 720	6	10,5	6,5	$d_1 + 5$	$d_1 + 20$	8 ± 1,5	VR3	R	**419002**
		1 720	6	10,5	6,5	$d_1 + 5$	$d_1 + 20$	8 ± 1,5	VR3	V	**419006**
1 870	**1 920**	1 720	14,3	25	15	$d_1 + 10$	$d_1 + 45$	20 ± 4	VR1	R	**419000**
1 905	**1 955**	1 794	32,5	65	30	$d_1 + 24$	$d_1 + 115$	50 ± 12	VR4	R	**419503**
		1 794	32,5	65	21	$d_1 + 24$	$d_1 + 115$	50 ± 12	VR6	R	**471951**
1 925	**1 975**	1 765	6	10,5	6,5	$d_1 + 5$	$d_1 + 20$	8 ± 1,5	VR3	R	**419502**
		1 765	6	10,5	6,5	$d_1 + 5$	$d_1 + 20$	8 ± 1,5	VR3	V	**419506**
1 920	**1 970**	1 765	14,3	25	15	$d_1 + 10$	$d_1 + 45$	20 ± 4	VR1	R	**419500**
1 955	**2 010**	1 844	32,5	65	30	$d_1 + 24$	$d_1 + 115$	50 ± 12	VR4	R	**420003**
		1 844	32,5	65	21	$d_1 + 24$	$d_1 + 115$	50 ± 12	VR6	R	**472001**
1 975	**2 025**	1 810	6	10,5	6,5	$d_1 + 5$	$d_1 + 20$	8 ± 1,5	VR3	R	**420002**
		1 810	6	10,5	6,5	$d_1 + 5$	$d_1 + 20$	8 ± 1,5	VR3	V	**420006**
1 970	**2 020**	1 810	14,3	25	15	$d_1 + 10$	$d_1 + 45$	20 ± 4	VR1	R	**420000**

d_1 **0.11–2.28** in

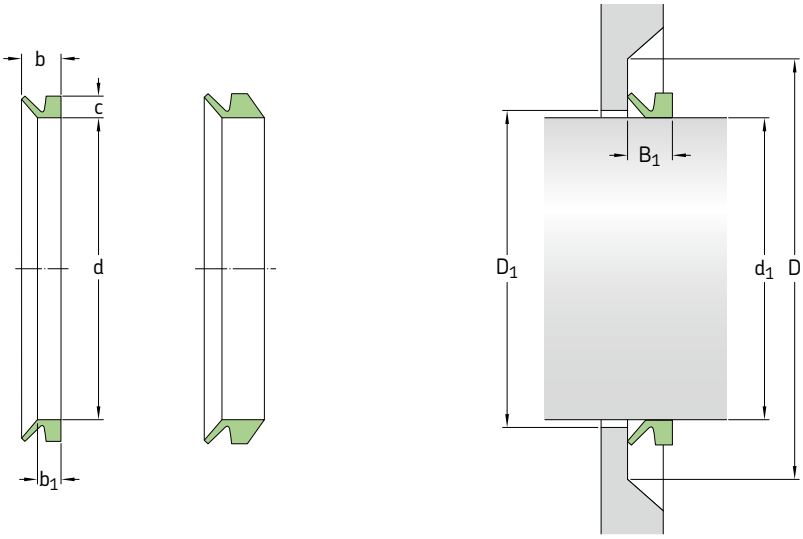

Dimensions									Design	Lip code	Designation
Shaft diameter range d_1 over	incl.	Seal inside diameter, free state d	Nominal seal height c	Seal seat width b_1	Nominal seal width b	Clearance D_1 (= d_1 +) D_1 max.	Counterface D (= d_1 +) D min.	Seal fitted width B_1			
in		in							–	–	–
0.11	**0.14**	0.10	0.06	0.08	0.12	0.04	0.16	0.10 ± 0.012	VR1	R	**400030**
		0.10	0.06	0.08	0.12	0.04	0.16	0.10 ± 0.012	VR1	V	**400034**
0.14	**0.18**	0.13	0.08	0.09	0.15	0.04	0.24	0.12 ± 0.016	VR1	R	**400040**
		0.13	0.08	0.09	0.15	0.04	0.24	0.12 ± 0.016	VR1	V	**400044**
0.18	**0.22**	0.16	0.08	0.09	0.15	0.04	0.24	0.12 ± 0.016	VR1	R	**400050**
		0.16	0.08	0.09	0.15	0.04	0.24	0.12 ± 0.016	VR1	V	**400054**
		0.16	0.08	0.15	0.20	0.04	0.24	0.18 ± 0.016	VR2	R	**400051**
		0.16	0.08	0.15	0.20	0.04	0.24	0.18 ± 0.016	VR2	V	**400055**
0.22	**0.26**	0.20	0.08	0.09	0.15	0.04	0.24	0.12 ± 0.016	VR1	R	**400060**
		0.20	0.08	0.09	0.15	0.04	0.24	0.12 ± 0.016	VR1	V	**400064**
		0.20	0.08	0.15	0.20	0.04	0.24	0.18 ± 0.016	VR2	R	**400061**
		0.20	0.08	0.15	0.20	0.04	0.24	0.18 ± 0.016	VR2	V	**400065**
0.26	**0.31**	0.24	0.08	0.09	0.15	0.04	0.24	0.12 ± 0.016	VR1	R	**400070**
		0.24	0.08	0.09	0.15	0.04	0.24	0.12 ± 0.016	VR1	V	**400074**
		0.24	0.08	0.15	0.20	0.04	0.24	0.18 ± 0.016	VR2	R	**400071**
		0.24	0.08	0.15	0.20	0.04	0.24	0.18 ± 0.016	VR2	V	**400075**
0.31	**0.37**	0.28	0.08	0.09	0.15	0.04	0.24	0.12 ± 0.016	VR1	R	**400080**
		0.28	0.08	0.09	0.15	0.04	0.24	0.12 ± 0.016	VR1	V	**400084**
		0.28	0.08	0.15	0.20	0.04	0.24	0.18 ± 0.016	VR2	R	**400081**
		0.28	0.08	0.15	0.20	0.04	0.24	0.18 ± 0.016	VR2	V	**400085**
0.37	**0.45**	0.35	0.12	0.13	0.22	0.04	0.35	0.18 ± 0.02	VR1	R	**400100**
		0.35	0.12	0.13	0.22	0.04	0.35	0.18 ± 0.02	VR1	V	**400104**
		0.35	0.12	0.22	0.30	0.04	0.35	0.26 ± 0.02	VR2	R	**400101**
		0.35	0.12	0.22	0.30	0.04	0.35	0.26 ± 0.02	VR2	V	**400105**
0.45	**0.49**	0.41	0.12	0.13	0.22	0.04	0.35	0.18 ± 0.02	VR1	R	**400120**
		0.41	0.12	0.13	0.22	0.04	0.35	0.18 ± 0.02	VR1	V	**400124**
		0.41	0.12	0.22	0.30	0.04	0.35	0.26 ± 0.02	VR2	R	**400121**
		0.41	0.12	0.22	0.30	0.04	0.35	0.26 ± 0.02	VR2	V	**400125**
0.49	**0.53**	0.46	0.12	0.13	0.22	0.04	0.35	0.18 ± 0.02	VR1	R	**400130**
		0.46	0.12	0.13	0.22	0.04	0.35	0.18 ± 0.02	VR1	V	**400134**
0.53	**0.61**	0.49	0.12	0.13	0.22	0.04	0.35	0.18 ± 0.02	VR1	R	**400140**
		0.49	0.12	0.13	0.22	0.04	0.35	0.18 ± 0.02	VR1	V	**400144**
0.53	**0.61**	0.49	0.12	0.22	0.30	0.04	0.35	0.26 ± 0.02	VR2	R	**400141**
		0.49	0.12	0.22	0.30	0.04	0.35	0.26 ± 0.02	VR2	V	**400145**

Dimensions Shaft diameter range d_1 over	incl.	Seal inside diameter, free state d	Nominal seal height c	Seal seat width b_1	Nominal seal width b	Clearance D_1 (= d_1 +) D_1 max.	Counterface D (= d_1 +) D min.	Seal fitted width B_1	Design	Lip code	Designation
in		in							–	–	–
0.61	**0.67**	0.55	0.12	0.13	0.22	0.04	0.35	0.18 ± 0.02	VR1	R	**400160**
		0.55	0.12	0.13	0.22	0.04	0.35	0.18 ± 0.02	VR1	V	**400164**
0.61	**0.69**	0.55	0.12	0.22	0.30	0.04	0.35	0.26 ± 0.02	VR2	R	**400161**
		0.55	0.12	0.22	0.30	0.04	0.35	0.26 ± 0.02	VR2	V	**400165**
0.69	**0.75**	0.63	0.12	0.13	0.22	0.04	0.35	0.18 ± 0.02	VR1	R	**400180**
		0.63	0.12	0.13	0.22	0.04	0.35	0.18 ± 0.02	VR1	V	**400184**
		0.63	0.12	0.22	0.30	0.04	0.35	0.26 ± 0.02	VR2	R	**400181**
		0.63	0.12	0.22	0.30	0.04	0.35	0.26 ± 0.02	VR2	V	**400185**
0.75	**0.83**	0.71	0.16	0.19	0.30	0.08	0.47	0.24 ± 0.03	VR1	R	**400200**
		0.71	0.16	0.19	0.30	0.08	0.47	0.24 ± 0.03	VR1	V	**400204**
		0.71	0.16	0.31	0.41	0.08	0.47	0.35 ± 0.03	VR2	R	**400201**
		0.71	0.16	0.31	0.41	0.08	0.47	0.35 ± 0.03	VR2	V	**400205**
0.83	**0.94**	0.79	0.16	0.19	0.30	0.08	0.47	0.24 ± 0.03	VR1	R	**400220**
		0.79	0.16	0.19	0.30	0.08	0.47	0.24 ± 0.03	VR1	V	**400224**
		0.79	0.16	0.31	0.41	0.08	0.47	0.35 ± 0.03	VR2	R	**400221**
		0.79	0.16	0.31	0.41	0.08	0.47	0.35 ± 0.03	VR2	V	**400225**
0.94	**1.06**	0.87	0.16	0.19	0.30	0.08	0.47	0.24 ± 0.03	VR1	R	**400250**
		0.87	0.16	0.19	0.30	0.08	0.47	0.24 ± 0.03	VR1	V	**400254**
		0.87	0.16	0.31	0.41	0.08	0.47	0.35 ± 0.03	VR2	R	**400251**
		0.87	0.16	0.31	0.41	0.08	0.47	0.35 ± 0.03	VR2	V	**400255**
1.06	**1.14**	0.98	0.16	0.19	0.30	0.08	0.47	0.24 ± 0.03	VR1	R	**400280**
		0.98	0.16	0.19	0.30	0.08	0.47	0.24 ± 0.03	VR1	V	**400284**
		0.98	0.16	0.31	0.41	0.08	0.47	0.35 ± 0.03	VR2	R	**400281**
		0.98	0.16	0.31	0.41	0.08	0.47	0.35 ± 0.03	VR2	V	**400285**
1.14	**1.22**	1.06	0.16	0.19	0.30	0.08	0.47	0.24 ± 0.03	VR1	R	**400300**
		1.06	0.16	0.19	0.30	0.08	0.47	0.24 ± 0.03	VR1	V	**400304**
		1.06	0.16	0.31	0.41	0.08	0.47	0.35 ± 0.03	VR2	R	**400301**
		1.06	0.16	0.31	0.41	0.08	0.47	0.35 ± 0.03	VR2	V	**400305**
1.22	**1.30**	1.14	0.16	0.19	0.30	0.08	0.47	0.24 ± 0.03	VR1	R	**400320**
		1.14	0.16	0.19	0.30	0.08	0.47	0.24 ± 0.03	VR1	V	**400324**
		1.14	0.16	0.31	0.41	0.08	0.47	0.35 ± 0.03	VR2	R	**400321**
		1.14	0.16	0.31	0.41	0.08	0.47	0.35 ± 0.03	VR2	V	**400325**
1.30	**1.42**	1.22	0.16	0.19	0.30	0.08	0.47	0.24 ± 0.03	VR1	R	**400350**
		1.22	0.16	0.19	0.30	0.08	0.47	0.24 ± 0.03	VR1	V	**400354**
		1.22	0.16	0.31	0.41	0.08	0.47	0.35 ± 0.03	VR2	R	**400351**
		1.22	0.16	0.31	0.41	0.08	0.47	0.35 ± 0.03	VR2	V	**400355**
1.42	**1.50**	1.34	0.16	0.19	0.30	0.08	0.47	0.24 ± 0.03	VR1	R	**400380**
		1.34	0.16	0.19	0.30	0.08	0.47	0.24 ± 0.03	VR1	V	**400384**
		1.34	0.16	0.31	0.41	0.08	0.47	0.35 ± 0.03	VR2	R	**400381**
		1.34	0.16	0.31	0.41	0.08	0.47	0.35 ± 0.03	VR2	V	**400385**
1.50	**1.69**	1.42	0.20	0.22	0.35	0.08	0.59	0.28 ± 0.04	VR1	R	**400400**
		1.42	0.20	0.22	0.35	0.08	0.59	0.28 ± 0.04	VR1	V	**400409**
		1.42	0.20	0.37	0.51	0.08	0.59	0.43 ± 0.04	VR2	R	**400401**
		1.42	0.20	0.37	0.51	0.08	0.59	0.43 ± 0.04	VR2	V	**400405**
1.69	**1.89**	1.57	0.20	0.22	0.35	0.08	0.59	0.28 ± 0.04	VR1	R	**400450**
		1.57	0.20	0.22	0.35	0.08	0.59	0.28 ± 0.04	VR1	V	**400454**
		1.57	0.20	0.37	0.51	0.08	0.59	0.43 ± 0.04	VR2	R	**400451**
		1.57	0.20	0.37	0.51	0.08	0.59	0.43 ± 0.04	VR2	V	**400455**
1.89	**2.09**	1.77	0.20	0.22	0.35	0.08	0.59	0.28 ± 0.04	VR1	R	**400500**
		1.77	0.20	0.22	0.35	0.08	0.59	0.28 ± 0.04	VR1	V	**400504**
		1.77	0.20	0.37	0.51	0.08	0.59	0.43 ± 0.04	VR2	R	**400501**
		1.77	0.20	0.37	0.51	0.08	0.59	0.43 ± 0.04	VR2	V	**400505**
2.09	**2.28**	1.93	0.20	0.22	0.35	0.08	0.59	0.28 ± 0.04	VR1	R	**400550**
		1.93	0.20	0.22	0.35	0.08	0.59	0.28 ± 0.04	VR1	V	**400554**
		1.93	0.20	0.37	0.51	0.08	0.59	0.43 ± 0.04	VR2	R	**400551**
		1.93	0.20	0.37	0.51	0.08	0.59	0.43 ± 0.04	VR2	V	**400555**

d_1 **2.28–8.27** in

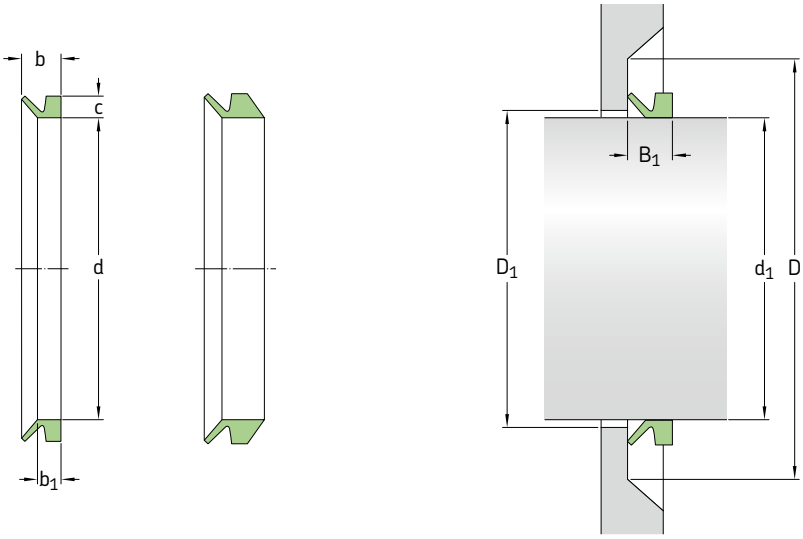

Dimensions									Design	Lip code	Designation
Shaft diameter range d_1 over	incl.	Seal inside diameter, free state d	Nominal seal height c	Seal seat width b_1	Nominal seal width b	Clearance D_1 (= d_1 +) D_1 max.	Counterface D (= d_1 +) D min.	Seal fitted width B_1			
in		in							–	–	–
2.28	**2.48**	2.13	0.20	0.22	0.35	0.08	0.59	0.28 ± 0.04	VR1	R	**400600**
		2.13	0.20	0.22	0.35	0.08	0.59	0.28 ± 0.04	VR1	V	**400604**
		2.13	0.20	0.37	0.51	0.08	0.59	0.43 ± 0.04	VR2	R	**400601**
		2.13	0.20	0.37	0.51	0.08	0.59	0.43 ± 0.04	VR2	V	**400605**
2.48	**2.68**	2.28	0.20	0.22	0.35	0.08	0.59	0.28 ± 0.04	VR1	R	**400650**
		2.28	0.20	0.22	0.35	0.08	0.59	0.28 ± 0.04	VR1	V	**400654**
		2.28	0.20	0.37	0.51	0.08	0.59	0.43 ± 0.04	VR2	R	**400651**
		2.28	0.20	0.37	0.51	0.08	0.59	0.43 ± 0.04	VR2	V	**400655**
2.68	**2.87**	2.48	0.24	0.27	0.43	0.12	0.71	0.35 ± 0.05	VR1	R	**400700**
		2.48	0.24	0.27	0.43	0.12	0.71	0.35 ± 0.05	VR1	V	**400704**
		2.48	0.24	0.44	0.61	0.12	0.71	0.53 ± 0.05	VR2	R	**400701**
		2.48	0.24	0.44	0.61	0.12	0.71	0.53 ± 0.05	VR2	V	**400705**
2.87	**3.07**	2.64	0.24	0.27	0.43	0.12	0.71	0.35 ± 0.05	VR1	R	**400750**
		2.64	0.24	0.27	0.43	0.12	0.71	0.53 ± 0.05	VR2	R	**400751**
		2.64	0.24	0.44	0.61	0.12	0.71	0.53 ± 0.05	VR2	V	**400755**
3.07	**3.27**	2.83	0.24	0.27	0.43	0.12	0.71	0.35 ± 0.05	VR1	R	**400800**
		2.83	0.24	0.27	0.43	0.12	0.71	0.35 ± 0.05	VR1	V	**400804**
		2.83	0.24	0.44	0.61	0.12	0.71	0.53 ± 0.05	VR2	R	**400801**
		2.83	0.24	0.44	0.61	0.12	0.71	0.53 ± 0.05	VR2	V	**400805**
3.27	**3.46**	2.99	0.24	0.27	0.43	0.12	0.71	0.35 ± 0.05	VR1	R	**400850**
		2.99	0.24	0.27	0.43	0.12	0.71	0.35 ± 0.05	VR1	V	**400854**
		2.99	0.24	0.44	0.61	0.12	0.71	0.53 ± 0.05	VR2	R	**400851**
		2.99	0.24	0.44	0.61	0.12	0.71	0.53 ± 0.05	VR2	V	**400855**
3.46	**3.66**	3.19	0.24	0.27	0.43	0.12	0.71	0.35 ± 0.05	VR1	R	**400900**
		3.19	0.24	0.27	0.43	0.12	0.71	0.35 ± 0.05	VR1	V	**400904**
		3.19	0.24	0.44	0.61	0.12	0.71	0.53 ± 0.05	VR2	R	**400901**
		3.19	0.24	0.44	0.61	0.12	0.71	0.53 ± 0.05	VR2	V	**400905**
3.66	**3.86**	3.35	0.24	0.27	0.43	0.12	0.71	0.35 ± 0.05	VR1	R	**400950**
		3.35	0.24	0.27	0.43	0.12	0.71	0.35 ± 0.05	VR1	V	**400954**
		3.35	0.24	0.44	0.61	0.12	0.71	0.53 ± 0.05	VR2	R	**400951**
		3.35	0.24	0.44	0.61	0.12	0.71	0.53 ± 0.05	VR2	V	**400955**
3.86	**4.13**	3.54	0.24	0.27	0.43	0.12	0.71	0.35 ± 0.05	VR1	R	**401000**
		3.54	0.24	0.27	0.43	0.12	0.71	0.35 ± 0.05	VR1	V	**401004**
		3.54	0.24	0.44	0.61	0.12	0.71	0.53 ± 0.05	VR2	R	**401001**
		3.54	0.24	0.44	0.61	0.12	0.71	0.53 ± 0.05	VR2	V	**401005**

Dimensions Shaft diameter range d_1 over	incl.	Seal inside diameter, free state d	Nominal seal height c	Seal seat width b_1	Nominal seal width b	Clearance D_1 (= d_1 +) D_1 max.	Counterface D (= d_1 +) D min.	Seal fitted width B_1	Design	Lip code	Designation
in		in							–	–	–
4.13	**4.53**	3.90	0.26	0.24	0.41	0.20	0.79	0.31 ± 0.06	VR3	R	**401102**
		3.90	0.26	0.24	0.41	0.20	0.79	0.31 ± 0.06	VR3	V	**401106**
		3.90	0.28	0.31	0.50	0.16	0.83	0.41 ± 0.06	VR1	R	**401100**
		3.90	0.28	0.31	0.50	0.16	0.83	0.41 ± 0.06	VR1	V	**401104**
		3.90	0.28	0.52	0.71	0.16	0.83	0.61 ± 0.06	VR2	R	**401101**
		3.90	0.28	0.52	0.71	0.16	0.83	0.61 ± 0.06	VR2	V	**401105**
4.53	**4.92**	4.25	0.26	0.24	0.41	0.20	0.79	0.31 ± 0.06	VR3	R	**401202**
		4.25	0.26	0.24	0.41	0.20	0.79	0.31 ± 0.06	VR3	V	**401206**
		4.25	0.28	0.31	0.50	0.16	0.83	0.41 ± 0.06	VR1	R	**401200**
		4.25	0.28	0.31	0.50	0.16	0.83	0.41 ± 0.06	VR1	V	**401204**
		4.25	0.28	0.52	0.71	0.16	0.83	0.61 ± 0.06	VR2	R	**401201**
		4.25	0.28	0.52	0.71	0.16	0.83	0.61 ± 0.06	VR2	V	**401205**
4.92	**5.31**	4.61	0.26	0.24	0.41	0.20	0.79	0.31 ± 0.06	VR3	R	**401302**
		4.61	0.26	0.24	0.41	0.20	0.79	0.31 ± 0.06	VR3	V	**401306**
		4.61	0.28	0.31	0.50	0.16	0.83	0.41 ± 0.06	VR1	R	**401300**
		4.61	0.28	0.31	0.50	0.16	0.83	0.41 ± 0.06	VR1	V	**401304**
		4.61	0.28	0.52	0.71	0.16	0.83	0.61 ± 0.06	VR2	R	**401301**
		4.61	0.28	0.52	0.71	0.16	0.83	0.61 ± 0.06	VR2	V	**401305**
5.31	**5.71**	4.96	0.26	0.24	0.41	0.20	0.79	0.31 ± 0.06	VR3	R	**401402**
		4.96	0.26	0.24	0.41	0.20	0.79	0.31 ± 0.06	VR3	V	**401406**
		4.96	0.28	0.31	0.50	0.16	0.83	0.41 ± 0.06	VR1	R	**401400**
		4.96	0.28	0.31	0.50	0.16	0.83	0.41 ± 0.06	VR1	V	**401404**
		4.96	0.28	0.52	0.71	0.16	0.83	0.61 ± 0.06	VR2	R	**401401**
		4.96	0.28	0.52	0.71	0.16	0.83	0.61 ± 0.06	VR2	V	**401405**
5.71	**6.10**	5.31	0.26	0.24	0.41	0.20	0.79	0.31 ± 0.06	VR3	R	**401502**
		5.31	0.26	0.24	0.41	0.20	0.79	0.31 ± 0.06	VR3	V	**401506**
		5.31	0.28	0.31	0.50	0.16	0.83	0.41 ± 0.06	VR1	R	**401500**
		5.31	0.28	0.31	0.50	0.16	0.83	0.41 ± 0.06	VR1	V	**401504**
		5.31	0.28	0.52	0.71	0.16	0.83	0.61 ± 0.06	VR2	R	**401501**
		5.31	0.28	0.52	0.71	0.16	0.83	0.61 ± 0.06	VR2	V	**401505**
6.10	**6.50**	5.67	0.26	0.24	0.41	0.20	0.79	0.31 ± 0.06	VR3	R	**401602**
		5.67	0.26	0.24	0.41	0.20	0.79	0.31 ± 0.06	VR3	V	**401606**
		5.67	0.31	0.35	0.57	0.16	0.94	0.47 ± 0.07	VR1	R	**401600**
		5.67	0.31	0.35	0.57	0.16	0.94	0.47 ± 0.07	VR1	V	**401604**
		5.67	0.31	0.59	0.81	0.16	0.94	0.71 ± 0.07	VR2	R	**401601**
		5.67	0.31	0.59	0.81	0.16	0.94	0.71 ± 0.07	VR2	V	**401605**
6.50	**6.89**	6.02	0.26	0.24	0.41	0.20	0.79	0.31 ± 0.06	VR3	R	**401702**
		6.02	0.26	0.24	0.41	0.20	0.79	0.31 ± 0.06	VR3	V	**401706**
		6.02	0.31	0.35	0.57	0.16	0.94	0.47 ± 0.07	VR1	R	**401700**
		6.02	0.31	0.35	0.57	0.16	0.94	0.47 ± 0.07	VR1	V	**401704**
		6.02	0.31	0.59	0.81	0.16	0.94	0.71 ± 0.07	VR2	R	**401701**
		6.02	0.31	0.59	0.81	0.16	0.94	0.71 ± 0.07	VR2	V	**401705**
6.89	**7.28**	6.38	0.26	0.24	0.41	0.20	0.79	0.31 ± 0.06	VR3	R	**401802**
		6.38	0.26	0.24	0.41	0.20	0.79	0.31 ± 0.06	VR3	V	**401806**
		6.38	0.31	0.35	0.57	0.16	0.94	0.47 ± 0.07	VR1	R	**401800**
		6.38	0.31	0.35	0.57	0.16	0.94	0.47 ± 0.07	VR1	V	**401804**
		6.38	0.31	0.59	0.81	0.16	0.94	0.71 ± 0.07	VR2	R	**401801**
		6.38	0.31	0.59	0.81	0.16	0.94	0.71 ± 0.07	VR2	V	**401805**
7.28	**7.68**	6.73	0.26	0.24	0.41	0.20	0.79	0.31 ± 0.06	VR3	R	**401902**
		6.73	0.26	0.24	0.41	0.20	0.79	0.31 ± 0.06	VR3	V	**401906**
		6.73	0.31	0.35	0.57	0.16	0.94	0.47 ± 0.07	VR1	R	**401900**
		6.73	0.31	0.35	0.57	0.16	0.94	0.47 ± 0.07	VR1	V	**401904**
		6.73	0.31	0.59	0.81	0.16	0.94	0.71 ± 0.07	VR2	R	**401901**
		6.73	0.31	0.59	0.81	0.16	0.94	0.71 ± 0.07	VR2	V	**401905**
7.68	**8.27**	7.17	0.26	0.24	0.41	0.20	0.79	0.31 ± 0.06	VR3	R	**4020022**
		7.17	0.26	0.24	0.41	0.20	0.79	0.31 ± 0.06	VR3	V	**402006**
		7.09	0.31	0.35	0.57	0.16	0.94	0.47 ± 0.07	VR1	R	**401990**
		7.09	0.31	0.35	0.57	0.16	0.94	0.47 ± 0.07	VR1	V	**401994**
		7.09	0.31	0.59	0.81	0.16	0.94	0.71 ± 0.07	VR2	R	**401991**
		7.09	0.31	0.59	0.81	0.16	0.94	0.71 ± 0.07	VR2	V	**401995**

d_1 **7.48–16.14** in

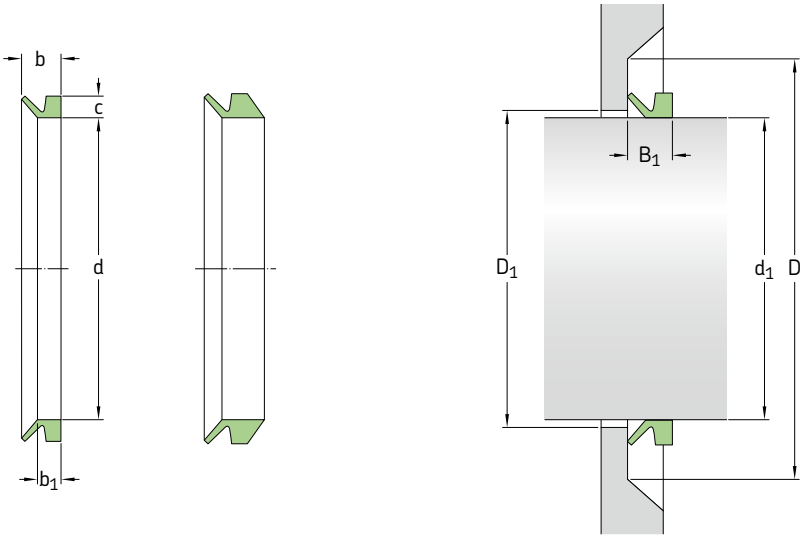

Dimensions Shaft diameter range d_1 over	incl.	Seal inside diameter, free state d	Nominal seal height c	Seal seat width b_1	Nominal seal width b	Clearance D_1 (= d_1 +) D_1 max.	Counterface D (= d_1 +) D min.	Seal fitted width B_1	Design	Lip code	Designation
in		in							–	–	–
7.48	**8.27**	7.09	0.59	0.56	0.98	0.39	1.77	0.79 ± 0.16	VR1	R	**402000**
		7.09	0.59	0.56	0.98	0.39	1.77	0.79 ± 0.16	VR1	V	**402004**
8.27	**9.17**	7.80	0.26	0.24	0.41	0.20	0.79	0.31 ± 0.06	VR3	R	**402202**
		7.80	0.26	0.24	0.41	0.20	0.79	0.31 ± 0.06	VR3	V	**402206**
		7.80	0.59	0.56	0.98	0.39	1.77	0.79 ± 0.16	VR1	R	**402200**
		7.80	0.59	0.56	0.98	0.39	1.77	0.79 ± 0.16	VR1	V	**402204**
9.17	**10.24**	8.86	0.26	0.24	0.41	0.20	0.79	0.31 ± 0.06	VR3	R	**402502**
		8.86	0.26	0.24	0.41	0.20	0.79	0.31 ± 0.06	VR3	V	**402506**
9.25	**10.43**	8.86	0.59	0.56	0.98	0.39	1.77	0.79 ± 0.16	VR1	R	**402500**
		8.86	0.59	0.56	0.98	0.39	1.77	0.79 ± 0.16	VR1	V	**402504**
10.24	**11.22**	9.72	0.26	0.24	0.41	0.20	0.79	0.31 ± 0.06	VR3	R	**402752**
		9.72	0.26	0.24	0.41	0.20	0.79	0.31 ± 0.06	VR3	V	**402756**
10.43	**11.42**	9.72	0.59	0.56	0.98	0.39	1.77	0.79 ± 0.16	VR1	R	**402750**
		9.72	0.59	0.56	0.98	0.39	1.77	0.79 ± 0.16	VR1	V	**402754**
11.22	**12.20**	10.63	0.26	0.24	0.41	0.20	0.79	0.31 ± 0.06	VR3	R	**403002**
		10.63	0.26	0.24	0.41	0.20	0.79	0.31 ± 0.06	VR3	V	**403006**
11.42	**12.20**	10.63	0.59	0.56	0.98	0.39	1.77	0.79 ± 0.16	VR1	R	**403000**
		10.63	0.59	0.56	0.98	0.39	1.77	0.79 ± 0.16	VR1	V	**403004**
11.81	**12.01**	11.57	1.18	1.28	2.56	0.94	4.53	1.97 ± 0.47	VR4	R	**403003**
		11.57	0.83	1.28	2.56	0.94	4.53	1.97 ± 0.47	VR6	R	**470301**
12.01	**12.20**	11.77	1.18	1.28	2.56	0.94	4.53	1.97 ± 0.47	VR4	R	**403053**
		11.77	0.83	1.28	2.56	0.94	4.53	1.97 ± 0.47	VR6	R	**470306**
12.20	**13.19**	11.50	0.26	0.24	0.41	0.20	0.79	0.31 ± 0.06	VR3	R	**403252**
		11.50	0.26	0.24	0.41	0.20	0.79	0.31 ± 0.06	VR3	V	**403256**
12.20	**13.19**	11.50	0.59	0.56	0.98	0.39	1.77	0.79 ± 0.16	VR1	R	**403250**
		11.50	0.59	0.56	0.98	0.39	1.77	0.79 ± 0.16	VR1	V	**403254**
12.20	**12.40**	11.97	1.18	1.28	2.56	0.94	4.53	1.97 ± 0.47	VR4	R	**403103**
		11.97	0.83	1.28	2.56	0.94	4.53	1.97 ± 0.47	VR6	R	**470311**
12.40	**12.60**	12.17	1.18	1.28	2.56	0.94	4.53	1.97 ± 0.47	VR4	R	**403153**
		12.17	0.83	1.28	2.56	0.94	4.53	1.97 ± 0.47	VR6	R	**470316**

Dimensions Shaft diameter range d_1 over	incl.	Seal inside diameter, free state d	Nominal seal height c	Seal seat width b_1	Nominal seal width b	Clearance D_1 (= d_1 +) D_1 max.	Counterface D (= d_1 +) D min.	Seal fitted width B_1	Design	Lip code	Designation
in		in							–	–	–
12.60	**12.80**	12.36	1.18	1.28	2.56	0.94	4.53	1.97 ± 0.47	VR4	R	**403203**
		12.36	0.83	1.28	2.56	0.94	4.53	1.97 ± 0.47	VR6	R	**470321**
12.80	**12.99**	12.56	1.18	1.28	2.56	0.94	4.53	1.97 ± 0.47	VR4	R	**403253**
		12.56	0.83	1.28	2.56	0.94	4.53	1.97 ± 0.47	VR6	R	**470326**
12.99	**13.19**	12.72	1.18	1.28	2.56	0.94	4.53	1.97 ± 0.47	VR4	R	**403303**
		12.72	0.83	1.28	2.56	0.94	4.53	1.97 ± 0.47	VR6	R	**470331**
13.19	**14.37**	12.40	0.26	0.24	0.41	0.20	0.79	0.31 ± 0.06	VR3	R	**403502**
		12.40	0.26	0.24	0.41	0.20	0.79	0.31 ± 0.06	VR3	V	**403506**
		12.40	0.59	0.56	0.98	0.39	1.77	0.79 ± 0.16	VR1	R	**403500**
		12.40	0.59	0.56	0.98	0.39	1.77	0.79 ± 0.16	VR1	V	**403504**
13.19	**13.39**	12.91	1.18	1.28	2.56	0.94	4.53	1.97 ± 0.47	VR4	R	**403353**
		12.91	0.83	1.28	2.56	0.94	4.53	1.97 ± 0.47	VR6	R	**470336**
13.39	**13.58**	13.11	1.18	1.28	2.56	0.94	4.53	1.97 ± 0.47	VR4	R	**403403**
		12.91	0.83	1.28	2.56	0.94	4.53	1.97 ± 0.47	VR6	R	**470341**
13.58	**13.78**	13.31	1.18	1.28	2.56	0.94	4.53	1.97 ± 0.47	VR4	R	**403453**
		13.31	0.83	1.28	2.56	0.94	4.53	1.97 ± 0.47	VR6	R	**470346**
13.78	**13.98**	13.50	1.18	1.28	2.56	0.94	4.53	1.97 ± 0.47	VR4	R	**403503**
		13.50	0.83	1.28	2.56	0.94	4.53	1.97 ± 0.47	VR6	R	**470351**
13.98	**14.17**	13.66	1.18	1.28	2.56	0.94	4.53	1.97 ± 0.47	VR4	R	**403553**
		13.66	0.83	1.28	2.56	0.94	4.53	1.97 ± 0.47	VR6	R	**470356**
14.17	**14.37**	13.86	1.18	1.28	2.56	0.94	4.53	1.97 ± 0.47	VR4	R	**403603**
		14.06	0.83	1.28	2.56	0.94	4.53	1.97 ± 0.47	VR6	R	**470361**
14.37	**15.16**	13.27	0.26	0.24	0.41	0.20	0.79	0.31 ± 0.06	VR3	R	**403752**
		13.27	0.26	0.24	0.41	0.20	0.79	0.31 ± 0.06	VR3	V	**403756**
14.37	**15.35**	13.27	0.59	0.56	0.98	0.39	1.77	0.79 ± 0.16	VR1	R	**403750**
		13.27	0.59	0.56	0.98	0.39	1.77	0.79 ± 0.16	VR1	V	**403754**
14.37	**14.57**	14.06	1.18	1.28	2.56	0.94	4.53	1.97 ± 0.47	VR4	R	**403653**
14.57	**14.76**	14.25	1.18	1.28	2.56	0.94	4.53	1.97 ± 0.47	VR4	R	**403703**
		14.25	0.83	1.28	2.56	0.94	4.53	1.97 ± 0.47	VR6	R	**470371**
14.76	**14.96**	14.45	1.18	1.28	2.56	0.94	4.53	1.97 ± 0.47	VR4	R	**403753**
		14.45	0.83	1.28	2.56	0.94	4.53	1.97 ± 0.47	VR6	R	**470376**
14.96	**15.16**	14.61	1.18	1.28	2.56	0.94	4.53	1.97 ± 0.47	VR4	R	**403803**
		14.61	0.83	1.28	2.56	0.94	4.53	1.97 ± 0.47	VR6	R	**470381**
15.16	**16.14**	14.17	0.26	0.24	0.41	0.20	0.79	0.31 ± 0.06	VR3	R	**404002**
		14.17	0.26	0.24	0.41	0.20	0.79	0.31 ± 0.06	VR3	V	**4040066**
15.35	**16.93**	14.17	0.59	0.56	0.98	0.39	1.77	0.79 ± 0.16	VR1	R	**404000**
		14.17	0.59	0.56	0.98	0.39	1.77	0.79 ± 0.16	VR1	V	**4040044**
15.16	**15.35**	14.80	1.18	1.28	2.56	0.94	4.53	1.97 ± 0.47	VR4	R	**403853**
		14.80	0.83	1.28	2.56	0.94	4.53	1.97 ± 0.47	VR6	R	**470386**
15.35	**15.55**	15.00	1.18	1.28	2.56	0.94	4.53	1.97 ± 0.47	VR4	R	**403903**
		15.00	0.83	1.28	2.56	0.94	4.53	1.97 ± 0.47	VR6	R	**470391**
15.55	**15.75**	15.20	1.18	1.28	2.56	0.94	4.53	1.97 ± 0.47	VR4	R	**403953**
		15.20	0.83	1.28	2.56	0.94	4.53	1.97 ± 0.47	VR6	R	**470396**
15.75	**15.94**	15.39	1.18	1.28	2.56	0.94	4.53	1.97 ± 0.47	VR4	R	**4040033**
		15.39	0.83	1.28	2.56	0.94	4.53	1.97 ± 0.47	VR6	R	**470401**
15.94	**16.14**	15.59	1.18	1.28	2.56	0.94	4.53	1.97 ± 0.47	VR4	R	**404053**
		15.59	0.83	1.28	2.56	0.94	4.53	1.97 ± 0.47	VR6	R	**470406**

d_1 **16.14–22.05** in

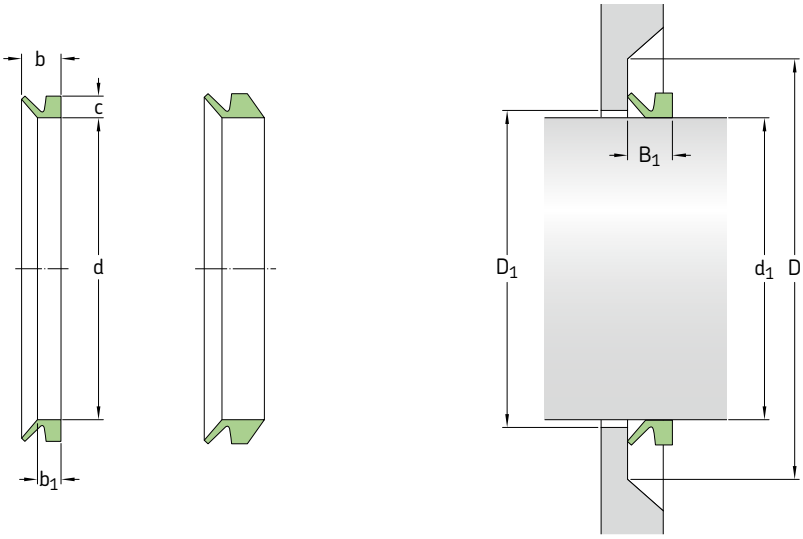

Dimensions									Design	Lip code	Designation
Shaft diameter range d_1 over	incl.	Seal inside diameter, free state d	Nominal seal height c	Seal seat width b_1	Nominal seal width b	Clearance D_1 (= d_1 +) D_1 max.	Counterface D (= d_1 +) D min.	Seal fitted width B_1			
in		in							–	–	–
16.14	**16.34**	15.79	1.18	1.28	2.56	0.94	4.53	1.97 ± 0.47	VR4	R	**404103**
		15.79	0.83	1.28	2.56	0.94	4.53	1.97 ± 0.47	VR6	R	**470411**
16.34	**16.54**	15.94	1.18	1.28	2.56	0.94	4.53	1.97 ± 0.47	VR4	R	**404153**
		15.94	0.83	1.28	2.56	0.94	4.53	1.97 ± 0.47	VR6	R	**470416**
16.54	**16.73**	16.14	1.18	1.28	2.56	0.94	4.53	1.97 ± 0.47	VR4	R	**404203**
		16.14	0.83	1.28	2.56	0.94	4.53	1.97 ± 0.47	VR6	R	**470421**
16.73	**16.93**	16.34	1.18	1.28	2.56	0.94	4.53	1.97 ± 0.47	VR4	R	**404253**
		16.34	0.83	1.28	2.56	0.94	4.53	1.97 ± 0.47	VR6	R	**470426**
16.14	**17.32**	15.04	0.26	0.24	0.41	0.20	0.79	0.31 ± 0.06	VR3	R	**404252**
		15.04	0.26	0.24	0.41	0.20	0.79	0.31 ± 0.06	VR3	V	**404256**
17.32	**18.70**	15.94	0.26	0.24	0.41	0.20	0.79	0.31 ± 0.06	VR3	R	**404502**
		15.94	0.26	0.24	0.41	0.20	0.79	0.31 ± 0.06	VR3	V	**404506**
16.93	**18.90**	15.94	0.59	0.56	0.98	0.39	1.77	0.79 ± 0.16	VR1	R	**404500**
		15.94	0.59	0.56	0.98	0.39	1.77	0.79 ± 0.16	VR1	V	**404504**
16.93	**17.13**	16.54	1.18	1.28	2.56	0.94	4.53	1.97 ± 0.47	VR4	R	**404303**
		16.54	0.83	1.28	2.56	0.94	4.53	1.97 ± 0.47	VR6	R	**470431**
17.13	**17.32**	16.73	1.18	1.28	2.56	0.94	4.53	1.97 ± 0.47	VR4	R	**404353**
		16.73	0.83	1.28	2.56	0.94	4.53	1.97 ± 0.47	VR6	R	**470436**
17.32	**17.52**	16.89	1.18	1.28	2.56	0.94	4.53	1.97 ± 0.47	VR4	R	**4044033**
		16.89	0.83	1.28	2.56	0.94	4.53	1.97 ± 0.47	VR6	R	**470441**
17.52	**17.72**	17.09	1.18	1.28	2.56	0.94	4.53	1.97 ± 0.47	VR4	R	**404453**
		17.09	0.83	1.28	2.56	0.94	4.53	1.97 ± 0.47	VR6	R	**470446**
17.72	**17.91**	17.28	1.18	1.28	2.56	0.94	4.53	1.97 ± 0.47	VR4	R	**404503**
		17.28	0.83	1.28	2.56	0.94	4.53	1.97 ± 0.47	VR6	R	**470451**
17.91	**18.11**	17.48	1.18	1.28	2.56	0.94	4.53	1.97 ± 0.47	VR4	R	**404553**
		17.48	0.83	1.28	2.56	0.94	4.53	1.97 ± 0.47	VR6	R	**470456**
18.11	**18.31**	17.64	1.18	1.28	2.56	0.94	4.53	1.97 ± 0.47	VR4	R	**4046033**
		17.64	0.83	1.28	2.56	0.94	4.53	1.97 ± 0.47	VR6	R	**470461**
18.31	**18.50**	17.83	1.18	1.28	2.56	0.94	4.53	1.97 ± 0.47	VR4	R	**404653**
		17.83	0.83	1.28	2.56	0.94	4.53	1.97 ± 0.47	VR6	R	**470466**

Dimensions Shaft diameter range d_1 over	incl.	Seal inside diameter, free state d	Nominal seal height c	Seal seat width b_1	Nominal seal width b	Clearance D_1 (= d_1 +) D_1 max.	Counterface D (= d_1 +) D min.	Seal fitted width B_1	Design	Lip code	Designation
in		in							–	–	–
18.50	**18.70**	18.03	1.18	1.28	2.56	0.94	4.53	1.97 ± 0.47	VR4	R	**404703**
		18.03	0.83	1.28	2.56	0.94	4.53	1.97 ± 0.47	VR6	R	**470471**
18.70	**18.90**	18.23	1.18	1.28	2.56	0.94	4.53	1.97 ± 0.47	VR4	R	**404753**
		18.23	0.83	1.28	2.56	0.94	4.53	1.97 ± 0.47	VR6	R	**470476**
18.70	**20.08**	17.72	0.26	0.24	0.41	0.20	0.79	0.31 ± 0.06	VR3	R	**405002**
		17.72	0.26	0.24	0.41	0.20	0.79	0.31 ± 0.06	VR3	V	**405009**
20.08	**21.26**	18.58	0.26	0.24	0.41	0.20	0.79	0.31 ± 0.06	VR3	R	**405252**
		18.58	0.26	0.24	0.41	0.20	0.79	0.31 ± 0.06	VR3	V	**405256**
18.90	**20.87**	17.72	0.59	0.56	0.98	0.39	1.77	0.79 ± 0.16	VR1	R	**405000**
		17.72	0.59	0.56	0.98	0.39	1.77	0.79 ± 0.16	VR1	V	**405004**
18.90	**19.09**	18.43	1.18	1.28	2.56	0.94	4.53	1.97 ± 0.47	VR4	R	**404803**
		18.43	0.83	1.28	2.56	0.94	4.53	1.97 ± 0.47	VR6	R	**470481**
19.09	**19.29**	18.62	1.18	1.28	2.56	0.94	4.53	1.97 ± 0.47	VR4	R	**404853**
		18.62	0.83	1.28	2.56	0.94	4.53	1.97 ± 0.47	VR6	R	**470486**
19.29	**19.49**	18.82	1.18	1.28	2.56	0.94	4.53	1.97 ± 0.47	VR4	R	**404903**
		18.82	0.83	1.28	2.56	0.94	4.53	1.97 ± 0.47	VR6	R	**470491**
19.49	**19.69**	19.02	1.18	1.28	2.56	0.94	4.53	1.97 ± 0.47	VR4	R	**404953**
		19.02	0.83	1.28	2.56	0.94	4.53	1.97 ± 0.47	VR6	R	**470496**
19.69	**19.88**	19.21	1.18	1.28	2.56	0.94	4.53	1.97 ± 0.47	VR4	R	**405003**
		19.21	0.83	1.28	2.56	0.94	4.53	1.97 ± 0.47	VR6	R	**470501**
19.88	**20.08**	19.41	1.18	1.28	2.56	0.94	4.53	1.97 ± 0.47	VR4	R	**405053**
		19.41	0.83	1.28	2.56	0.94	4.53	1.97 ± 0.47	VR6	R	**470506**
20.08	**20.28**	19.57	1.18	1.28	2.56	0.94	4.53	1.97 ± 0.47	VR4	R	**405103**
		19.57	0.83	1.28	2.56	0.94	4.53	1.97 ± 0.47	VR6	R	**470511**
20.28	**20.47**	19.76	1.18	1.28	2.56	0.94	4.53	1.97 ± 0.47	VR4	R	**405153**
		19.76	0.83	1.28	2.56	0.94	4.53	1.97 ± 0.47	VR6	R	**470516**
20.47	**20.67**	19.96	1.18	1.28	2.56	0.94	4.53	1.97 ± 0.47	VR4	R	**405203**
		19.96	0.83	1.28	2.56	0.94	4.53	1.97 ± 0.47	VR6	R	**470521**
20.67	**20.87**	20.16	1.18	1.28	2.56	0.94	4.53	1.97 ± 0.47	VR4	R	**405253**
		20.16	0.83	1.28	2.56	0.94	4.53	1.97 ± 0.47	VR6	R	**470526**
21.26	**22.64**	19.49	0.26	0.24	0.41	0.20	0.79	0.31 ± 0.06	VR3	R	**405502**
		19.49	0.26	0.24	0.41	0.20	0.79	0.31 ± 0.06	VR3	V	**405506**
20.87	**22.83**	19.49	0.59	0.56	0.98	0.39	1.77	0.79 ± 0.16	VR1	R	**405500**
		19.49	0.59	0.56	0.98	0.39	1.77	0.79 ± 0.16	VR1	V	**405504**
20.87	**21.06**	20.35	1.18	1.28	2.56	0.94	4.53	1.97 ± 0.47	VR4	R	**405303**
		20.35	0.83	1.28	2.56	0.94	4.53	1.97 ± 0.47	VR6	R	**470531**
21.06	**21.26**	20.51	1.18	1.28	2.56	0.94	4.53	1.97 ± 0.47	VR4	R	**405353**
		20.51	0.83	1.28	2.56	0.94	4.53	1.97 ± 0.47	VR6	R	**470536**
21.26	**21.46**	20.71	1.18	1.28	2.56	0.94	4.53	1.97 ± 0.47	VR4	R	**405403**
		20.71	0.83	1.28	2.56	0.94	4.53	1.97 ± 0.47	VR6	R	**470541**
21.46	**21.65**	20.91	1.18	1.28	2.56	0.94	4.53	1.97 ± 0.47	VR4	R	**405453**
		20.91	0.83	1.28	2.56	0.94	4.53	1.97 ± 0.47	VR6	R	**470546**
21.65	**21.85**	21.10	1.18	1.28	2.56	0.94	4.53	1.97 ± 0.47	VR4	R	**405503**
		21.10	0.83	1.28	2.56	0.94	4.53	1.97 ± 0.47	VR6	R	**470551**
21.85	**22.05**	21.30	1.18	1.28	2.56	0.94	4.53	1.97 ± 0.47	VR4	R	**405553**
		21.30	0.83	1.28	2.56	0.94	4.53	1.97 ± 0.47	VR6	R	**470556**

d_1 **22.05–32.48** in

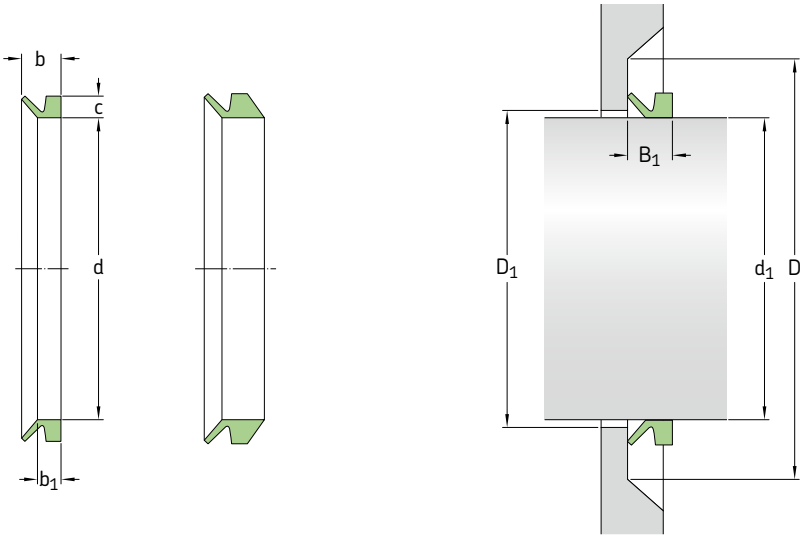

Dimensions									Design	Lip code	Designation
Shaft diameter range d_1 over	incl.	Seal inside diameter, free state d	Nominal seal height c	Seal seat width b_1	Nominal seal width b	Clearance D_1 (= d_1 +) D_1 max.	Counterface D (= d_1 +) D min.	Seal fitted width B_1			
in		in							–	–	–
22.05	**22.24**	21.50	1.18	1.28	2.56	0.94	4.53	1.97 ± 0.47	VR4	R	**405603**
		21.50	0.83	1.28	2.56	0.94	4.53	1.97 ± 0.47	VR6	R	**470561**
22.24	**22.44**	21.65	1.18	1.28	2.56	0.94	4.53	1.97 ± 0.47	VR4	R	**405653**
		21.65	0.83	1.28	2.56	0.94	4.53	1.97 ± 0.47	VR6	R	**470566**
22.44	**22.64**	21.85	1.18	1.28	2.56	0.94	4.53	1.97 ± 0.47	VR4	R	**405703**
		21.85	0.83	1.28	2.56	0.94	4.53	1.97 ± 0.47	VR6	R	**470571**
22.64	**22.83**	22.05	1.18	1.28	2.56	0.94	4.53	1.97 ± 0.47	VR4	R	**405753**
		22.05	0.83	1.28	2.56	0.94	4.53	1.97 ± 0.47	VR6	R	**470576**
22.64	**24.61**	21.26	0.26	0.24	0.41	0.20	0.79	0.31 ± 0.06	VR3	R	**4060022**
		21.26	0.26	0.24	0.41	0.20	0.79	0.31 ± 0.06	VR3	V	**406006**
22.83	**24.80**	21.26	0.59	0.56	0.98	0.39	1.77	0.79 ± 0.16	VR1	R	**406000**
		21.26	0.59	0.56	0.98	0.39	1.77	0.79 ± 0.16	VR1	V	**4060044**
22.83	**23.03**	22.24	1.18	1.28	2.56	0.94	4.53	1.97 ± 0.47	VR4	R	**405803**
		22.24	0.83	1.28	2.56	0.94	4.53	1.97 ± 0.47	VR6	R	**470581**
23.03	**23.23**	22.44	1.18	1.28	2.56	0.94	4.53	1.97 ± 0.47	VR4	R	**405853**
		22.44	0.83	1.28	2.56	0.94	4.53	1.97 ± 0.47	VR6	R	**470586**
23.23	**23.62**	22.64	1.18	1.28	2.56	0.94	4.53	1.97 ± 0.47	VR4	R	**405903**
		22.64	0.83	1.28	2.56	0.94	4.53	1.97 ± 0.47	VR6	R	**470591**
23.62	**24.02**	22.91	1.18	1.28	2.56	0.94	4.53	1.97 ± 0.47	VR4	R	**406003**
		22.91	0.83	1.28	2.56	0.94	4.53	1.97 ± 0.47	VR6	R	**470601**
24.02	**24.41**	23.31	1.18	1.28	2.56	0.94	4.53	1.97 ± 0.47	VR4	R	**4061033**
		23.31	0.83	1.28	2.56	0.94	4.53	1.97 ± 0.47	VR6	R	**470611**
24.41	**24.80**	23.70	1.18	1.28	2.56	0.94	4.53	1.97 ± 0.47	VR4	R	**4062033**
		23.70	0.83	1.28	2.56	0.94	4.53	1.97 ± 0.47	VR6	R	**470621**
24.21	**26.57**	23.62	0.26	0.24	0.41	0.20	0.79	0.31 ± 0.06	VR3	R	**406502**
		23.62	0.26	0.24	0.41	0.20	0.79	0.31 ± 0.06	VR3	V	**406506**
24.80	**26.18**	23.62	0.59	0.56	0.98	0.39	1.77	0.79 ± 0.16	VR1	R	**406500**
		23.62	0.59	0.56	0.98	0.39	1.77	0.79 ± 0.16	VR1	V	**406504**
24.80	**25.20**	24.09	1.18	1.28	2.56	0.94	4.53	1.97 ± 0.47	VR4	R	**4063033**
		24.09	0.83	1.28	2.56	0.94	4.53	1.97 ± 0.47	VR6	R	**470631**

Dimensions Shaft diameter range d_1 over	incl.	Seal inside diameter, free state d	Nominal seal height c	Seal seat width b_1	Nominal seal width b	Clearance D_1 (= d_1 +) D_1 max.	Counterface D (= d_1 +) D min.	Seal fitted width B_1	Design	Lip code	Designation
in		in							–	–	–
25.20	**25.59**	24.45	1.18	1.28	2.56	0.94	4.53	1.97 ± 0.47	VR4	R	**4064033**
		24.45	0.83	1.28	2.56	0.94	4.53	1.97 ± 0.47	VR6	R	**470641**
25.59	**25.98**	24.84	1.18	1.28	2.56	0.94	4.53	1.97 ± 0.47	VR4	R	**406503**
		24.84	0.83	1.28	2.56	0.94	4.53	1.97 ± 0.47	VR6	R	**470651**
25.98	**26.38**	25.20	1.18	1.28	2.56	0.94	4.53	1.97 ± 0.47	VR4	R	**4066033**
		25.20	0.83	1.28	2.56	0.94	4.53	1.97 ± 0.47	VR6	R	**470661**
26.57	**27.95**	24.80	0.26	0.24	0.41	0.20	0.79	0.31 ± 0.06	VR3	R	**407002**
		24.80	0.26	0.24	0.41	0.20	0.79	0.31 ± 0.06	VR3	V	**407006**
26.18	**27.76**	24.80	0.59	0.56	0.98	0.39	1.77	0.79 ± 0.16	VR1	R	**407000**
		24.80	0.59	0.56	0.98	0.39	1.77	0.79 ± 0.16	VR1	V	**407004**
26.38	**26.77**	25.59	1.18	1.28	2.56	0.94	4.53	1.97 ± 0.47	VR4	R	**406703**
		25.59	0.83	1.28	2.56	0.94	4.53	1.97 ± 0.47	VR6	R	**470671**
26.77	**27.17**	25.98	1.18	1.28	2.56	0.94	4.53	1.97 ± 0.47	VR4	R	**406803**
		25.98	0.83	1.28	2.56	0.94	4.53	1.97 ± 0.47	VR6	R	**470681**
27.17	**27.56**	26.38	1.18	1.28	2.56	0.94	4.53	1.97 ± 0.47	VR4	R	**406903**
		26.38	0.83	1.28	2.56	0.94	4.53	1.97 ± 0.47	VR6	R	**470691**
27.56	**27.95**	26.77	1.18	1.28	2.56	0.94	4.53	1.97 ± 0.47	VR4	R	**407003**
		26.77	0.83	1.28	2.56	0.94	4.53	1.97 ± 0.47	VR6	R	**470701**
27.95	**29.13**	26.38	0.26	0.24	0.41	0.20	0.79	0.31 ± 0.06	VR3	R	**407252**
		26.38	0.26	0.24	0.41	0.20	0.79	0.31 ± 0.06	VR3	V	**407256**
27.76	**29.33**	26.38	0.59	0.56	0.98	0.39	1.77	0.79 ± 0.16	VR1	R	**407250**
		26.38	0.59	0.56	0.98	0.39	1.77	0.79 ± 0.16	VR1	V	**407254**
27.95	**28.35**	27.13	1.18	1.28	2.56	0.94	4.53	1.97 ± 0.47	VR4	R	**407103**
		27.13	0.83	1.28	2.56	0.94	4.53	1.97 ± 0.47	VR6	R	**470711**
28.35	**28.74**	27.52	1.18	1.28	2.56	0.94	4.53	1.97 ± 0.47	VR4	R	**407203**
		27.52	0.83	1.28	2.56	0.94	4.53	1.97 ± 0.47	VR6	R	**470721**
28.74	**29.13**	27.91	1.18	1.28	2.56	0.94	4.53	1.97 ± 0.47	VR4	R	**407309**
		27.91	0.83	1.28	2.56	0.94	4.53	1.97 ± 0.47	VR6	R	**470731**
29.13	**29.53**	28.27	1.18	1.28	2.56	0.94	4.53	1.97 ± 0.47	VR4	R	**407403**
		28.27	0.83	1.28	2.56	0.94	4.53	1.97 ± 0.47	VR6	R	**470741**
29.13	**30.51**	27.76	0.26	0.24	0.41	0.20	0.79	0.31 ± 0.06	VR3	R	**407502**
		27.76	0.26	0.24	0.41	0.20	0.79	0.31 ± 0.06	VR3	V	**407506**
29.33	**30.91**	27.76	0.59	0.56	0.98	0.39	1.77	0.79 ± 0.16	VR1	R	**407500**
		27.76	0.59	0.56	0.98	0.39	1.77	0.79 ± 0.16	VR1	V	**407504**
29.53	**29.84**	28.66	1.18	1.28	2.56	0.94	4.53	1.97 ± 0.47	VR4	R	**407503**
		28.66	0.83	1.28	2.56	0.94	4.53	1.97 ± 0.47	VR6	R	**470751**
29.84	**30.16**	28.94	1.18	1.28	2.56	0.94	4.53	1.97 ± 0.47	VR4	R	**407603**
		28.94	0.83	1.28	2.56	0.94	4.53	1.97 ± 0.47	VR6	R	**470761**
30.16	**30.47**	29.25	1.18	1.28	2.56	0.94	4.53	1.97 ± 0.47	VR4	R	**407703**
		29.25	0.83	1.28	2.56	0.94	4.53	1.97 ± 0.47	VR6	R	**470771**
30.47	**30.83**	29.57	1.18	1.28	2.56	0.94	4.53	1.97 ± 0.47	VR4	R	**407803**
		29.57	0.83	1.28	2.56	0.94	4.53	1.97 ± 0.47	VR6	R	**470781**
30.83	**31.18**	29.88	1.18	1.28	2.56	0.94	4.53	1.97 ± 0.47	VR4	R	**407903**
		29.88	0.83	1.28	2.56	0.94	4.53	1.97 ± 0.47	VR6	R	**470791**
30.51	**32.48**	29.33	0.26	0.24	0.41	0.20	0.79	0.31 ± 0.06	VR3	R	**408002**
		29.33	0.26	0.24	0.41	0.20	0.79	0.31 ± 0.06	VR3	V	**408006**

d_1 **30.91–44.29** in

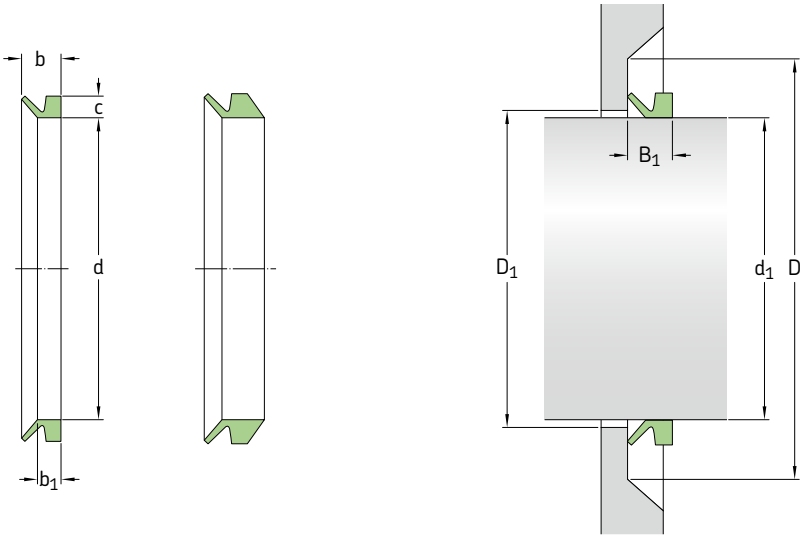

Dimensions									Design	Lip code	Designation
Shaft diameter range d_1 over	incl.	Seal inside diameter, free state d	Nominal seal height c	Seal seat width b_1	Nominal seal width b	Clearance D_1 (= d_1 +) D_1 max.	Counterface D (= d_1 +) D min.	Seal fitted width B_1			
in		in							–	–	–
30.91	**32.68**	29.33	0.59	0.56	0.98	0.39	1.77	0.79 ± 0.16	VR1	R	**408000**
		29.33	0.59	0.56	0.98	0.39	1.77	0.79 ± 0.16	VR1	V	**408004**
31.18	**31.54**	30.24	1.18	1.28	2.56	0.94	4.53	1.97 ± 0.47	VR4	R	**408003**
		30.24	0.83	1.28	2.56	0.94	4.53	1.97 ± 0.47	VR6	R	**470801**
31.54	**31.89**	30.59	1.18	1.28	2.56	0.94	4.53	1.97 ± 0.47	VR4	R	**408103**
		30.59	0.83	1.28	2.56	0.94	4.53	1.97 ± 0.47	VR6	R	**470811**
31.89	**32.32**	30.94	1.18	1.28	2.56	0.94	4.53	1.97 ± 0.47	VR4	R	**408203**
		30.94	0.83	1.28	2.56	0.94	4.53	1.97 ± 0.47	VR6	R	**470821**
32.32	**32.72**	31.34	1.18	1.28	2.56	0.94	4.53	1.97 ± 0.47	VR4	R	**408303**
		31.34	0.83	1.28	2.56	0.94	4.53	1.97 ± 0.47	VR6	R	**470831**
32.48	**34.45**	30.91	0.26	0.24	0.41	0.20	0.79	0.31 ± 0.06	VR3	R	**408502**
		30.91	0.26	0.24	0.41	0.20	0.79	0.31 ± 0.06	VR3	V	**408506**
32.68	**34.45**	30.91	0.59	0.56	0.98	0.39	1.77	0.79 ± 0.16	VR1	R	**408500**
		30.91	0.59	0.56	0.98	0.39	1.77	0.79 ± 0.16	VR1	V	**408504**
32.72	**33.11**	31.69	1.18	1.28	2.56	0.94	4.53	1.97 ± 0.47	VR4	R	**408403**
		31.69	0.83	1.28	2.56	0.94	4.53	1.97 ± 0.47	VR6	R	**470841**
33.11	**33.50**	32.05	1.18	1.28	2.56	0.94	4.53	1.97 ± 0.47	VR4	R	**408503**
		32.05	0.83	1.28	2.56	0.94	4.53	1.97 ± 0.47	VR6	R	**470851**
33.50	**33.90**	32.44	1.18	1.28	2.56	0.94	4.53	1.97 ± 0.47	VR4	R	**408603**
		32.44	0.83	1.28	2.56	0.94	4.53	1.97 ± 0.47	VR6	R	**470861**
33.90	**34.29**	32.80	1.18	1.28	2.56	0.94	4.53	1.97 ± 0.47	VR4	R	**408703**
		32.80	0.83	1.28	2.56	0.94	4.53	1.97 ± 0.47	VR6	R	**470871**
34.29	**34.72**	33.19	1.18	1.28	2.56	0.94	4.53	1.97 ± 0.47	VR4	R	**408803**
		33.19	0.83	1.28	2.56	0.94	4.53	1.97 ± 0.47	VR6	R	**470881**
34.45	**36.42**	32.48	0.26	0.24	0.41	0.20	0.79	0.31 ± 0.06	VR3	R	**409002**
		32.48	0.26	0.24	0.41	0.20	0.79	0.31 ± 0.06	VR3	V	**409006**
34.45	**36.22**	32.48	0.59	0.56	0.98	0.39	1.77	0.79 ± 0.16	VR1	R	**409000**
		32.48	0.59	0.56	0.98	0.39	1.77	0.79 ± 0.16	VR1	V	**409004**
34.72	**35.12**	33.58	1.18	1.28	2.56	0.94	4.53	1.97 ± 0.47	VR4	R	**408903**
		33.58	0.83	1.28	2.56	0.94	4.53	1.97 ± 0.47	VR6	R	**470891**

Dimensions Shaft diameter range d_1 over	incl.	Seal inside diameter, free state d	Nominal seal height c	Seal seat width b_1	Nominal seal width b	Clearance D_1 (= d_1 +) D_1 max.	Counterface D (= d_1 +) D min.	Seal fitted width B_1	Design	Lip code	Designation
in		in							–	–	–
35.12	**35.91**	34.29	1.18	1.28	2.56	0.94	4.53	1.97 ± 0.47	VR4	R	**409003**
		34.29	0.83	1.28	2.56	0.94	4.53	1.97 ± 0.47	VR6	R	**470901**
35.91	**36.30**	34.65	1.18	1.28	2.56	0.94	4.53	1.97 ± 0.47	VR4	R	**409203**
		34.65	0.83	1.28	2.56	0.94	4.53	1.97 ± 0.47	VR6	R	**470921**
36.42	**38.39**	34.06	0.26	0.24	0.41	0.20	0.79	0.31 ± 0.06	VR3	R	**409502**
		34.06	0.26	0.24	0.41	0.20	0.79	0.31 ± 0.06	VR3	V	**409506**
36.22	**37.99**	34.06	0.59	0.56	0.98	0.39	1.77	0.79 ± 0.16	VR1	R	**409500**
		34.06	0.59	0.56	0.98	0.39	1.77	0.79 ± 0.16	VR1	V	**409504**
36.30	**36.73**	35.04	1.18	1.28	2.56	0.94	4.53	1.97 ± 0.47	VR4	R	**409303**
		35.04	0.83	1.28	2.56	0.94	4.53	1.97 ± 0.47	VR6	R	**470931**
36.73	**37.17**	35.43	1.18	1.28	2.56	0.94	4.53	1.97 ± 0.47	VR4	R	**409403**
		35.43	0.83	1.28	2.56	0.94	4.53	1.97 ± 0.47	VR6	R	**470941**
37.17	**37.60**	35.87	1.18	1.28	2.56	0.94	4.53	1.97 ± 0.47	VR4	R	**409503**
		35.87	0.83	1.28	2.56	0.94	4.53	1.97 ± 0.47	VR6	R	**470951**
37.60	**38.03**	36.26	1.18	1.28	2.56	0.94	4.53	1.97 ± 0.47	VR4	R	**409603**
		36.26	0.83	1.28	2.56	0.94	4.53	1.97 ± 0.47	VR6	R	**470961**
38.39	**40.35**	35.83	0.26	0.24	0.41	0.20	0.79	0.31 ± 0.06	VR3	R	**410002**
		35.83	0.26	0.24	0.41	0.20	0.79	0.31 ± 0.06	VR3	V	**410006**
37.99	**39.96**	35.83	0.59	0.56	0.98	0.39	1.77	0.79 ± 0.16	VR1	R	**410000**
		35.83	0.59	0.56	0.98	0.39	1.77	0.79 ± 0.16	VR1	V	**410004**
38.03	**38.46**	36.69	1.18	1.28	2.56	0.94	4.53	1.97 ± 0.47	VR4	R	**409703**
		36.69	0.83	1.28	2.56	0.94	4.53	1.97 ± 0.47	VR6	R	**470971**
38.46	**38.90**	37.09	1.18	1.28	2.56	0.94	4.53	1.97 ± 0.47	VR4	R	**409803**
		37.09	0.83	1.28	2.56	0.94	4.53	1.97 ± 0.47	VR6	R	**470981**
38.90	**39.33**	37.52	1.18	1.28	2.56	0.94	4.53	1.97 ± 0.47	VR4	R	**409903**
		37.52	0.83	1.28	2.56	0.94	4.53	1.97 ± 0.47	VR6	R	**470991**
39.33	**39.76**	37.91	1.18	1.28	2.56	0.94	4.53	1.97 ± 0.47	VR4	R	**410003**
		37.91	0.83	1.28	2.56	0.94	4.53	1.97 ± 0.47	VR6	R	**471001**
39.76	**40.35**	38.31	1.18	1.28	2.56	0.94	4.53	1.97 ± 0.47	VR4	R	**410203**
		38.31	0.83	1.28	2.56	0.94	4.53	1.97 ± 0.47	VR6	R	**471021**
40.35	**42.32**	37.60	0.26	0.24	0.41	0.20	0.79	0.31 ± 0.06	VR3	R	**410502**
		37.60	0.26	0.24	0.41	0.20	0.79	0.31 ± 0.06	VR3	V	**410506**
39.96	**41.93**	37.60	0.59	0.56	0.98	0.39	1.77	0.79 ± 0.16	VR1	R	**410500**
40.35	**41.14**	38.98	1.18	1.28	2.56	0.94	4.53	1.97 ± 0.47	VR4	R	**410403**
		38.98	0.83	1.28	2.56	0.94	4.53	1.97 ± 0.47	VR6	R	**471041**
41.14	**41.93**	39.69	1.18	1.28	2.56	0.94	4.53	1.97 ± 0.47	VR4	R	**410603**
		39.69	0.83	1.28	2.56	0.94	4.53	1.97 ± 0.47	VR6	R	**471061**
42.32	**44.29**	39.37	0.26	0.24	0.41	0.20	0.79	0.31 ± 0.06	VR3	R	**411002**
		39.37	0.26	0.24	0.41	0.20	0.79	0.31 ± 0.06	VR3	V	**411006**
41.93	**43.90**	39.37	0.59	0.56	0.98	0.39	1.77	0.79 ± 0.16	VR1	R	**411000**
41.93	**42.72**	40.43	1.18	1.28	2.56	0.94	4.53	1.97 ± 0.47	VR4	R	**410803**
		40.43	0.83	1.28	2.56	0.94	4.53	1.97 ± 0.47	VR6	R	**471081**
42.72	**43.50**	41.14	1.18	1.28	2.56	0.94	4.53	1.97 ± 0.47	VR4	R	**411003**
		41.14	0.83	1.28	2.56	0.94	4.53	1.97 ± 0.47	VR6	R	**471101**
43.50	**44.29**	41.93	1.18	1.28	2.56	0.94	4.53	1.97 ± 0.47	VR4	R	**411203**
		41.93	0.83	1.28	2.56	0.94	4.53	1.97 ± 0.47	VR6	R	**471121**

d_1 **44.29–65.94** in

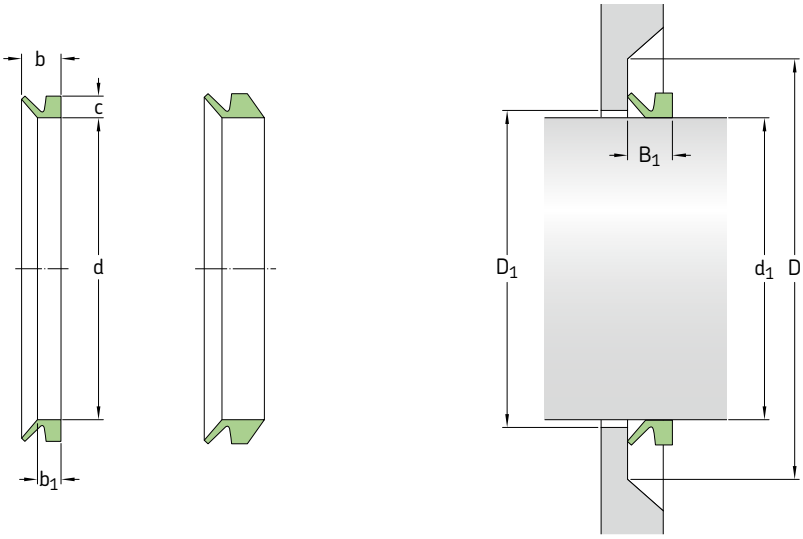

Dimensions Shaft diameter range d_1 over	incl.	Seal inside diameter, free state d	Nominal seal height c	Seal seat width b_1	Nominal seal width b	Clearance D_1 (= d_1 +) D_1 max.	Counterface D (= d_1 +) D min.	Seal fitted width B_1	Design	Lip code	Designation
in		in							–	–	–
44.29	**46.26**	41.14	0.26	0.24	0.41	0.20	0.79	0.31 ± 0.06	VR3	R	**411502**
		41.14	0.26	0.24	0.41	0.20	0.79	0.31 ± 0.06	VR3	V	**411506**
43.90	**45.87**	41.14	0.59	0.56	0.98	0.39	1.77	0.79 ± 0.16	VR1	R	**411500**
44.29	**45.08**	42.68	1.18	1.28	2.56	0.94	4.53	1.97 ± 0.47	VR4	R	**411403**
		42.68	0.83	1.28	2.56	0.94	4.53	1.97 ± 0.47	VR6	R	**471141**
45.08	**45.87**	43.43	1.18	1.28	2.56	0.94	4.53	1.97 ± 0.47	VR4	R	**411603**
		43.43	0.83	1.28	2.56	0.94	4.53	1.97 ± 0.47	VR6	R	**471161**
46.26	**48.23**	42.91	0.26	0.24	0.41	0.20	0.79	0.31 ± 0.06	VR3	R	**412002**
		42.91	0.26	0.24	0.41	0.20	0.79	0.31 ± 0.06	VR3	V	**412006**
45.87	**47.83**	42.91	0.59	0.56	0.98	0.39	1.77	0.79 ± 0.16	VR1	R	**412000**
45.87	**46.65**	44.13	1.18	1.28	2.56	0.94	4.53	1.97 ± 0.47	VR4	R	**411803**
		44.13	0.83	1.28	2.56	0.94	4.53	1.97 ± 0.47	VR6	R	**471181**
46.65	**47.44**	44.84	1.18	1.28	2.56	0.94	4.53	1.97 ± 0.47	VR4	R	**412003**
		44.84	0.83	1.28	2.56	0.94	4.53	1.97 ± 0.47	VR6	R	**471201**
47.44	**48.23**	45.55	1.18	1.28	2.56	0.94	4.53	1.97 ± 0.47	VR4	R	**412203**
		45.55	0.83	1.28	2.56	0.94	4.53	1.97 ± 0.47	VR6	R	**471221**
48.23	**50.20**	44.69	0.26	0.24	0.41	0.20	0.79	0.31 ± 0.06	VR3	R	**412502**
		44.69	0.26	0.24	0.41	0.20	0.79	0.31 ± 0.06	VR3	V	**412506**
47.83	**50.00**	44.69	0.59	0.56	0.98	0.39	1.77	0.79 ± 0.16	VR1	R	**412500**
48.23	**49.02**	46.30	1.18	1.28	2.56	0.94	4.53	1.97 ± 0.47	VR4	R	**471240**
		46.30	0.83	1.28	2.56	0.94	4.53	1.97 ± 0.47	VR6	R	**471241**
49.02	**50.00**	47.05	1.18	1.28	2.56	0.94	4.53	1.97 ± 0.47	VR4	R	**412603**
		47.05	0.83	1.28	2.56	0.94	4.53	1.97 ± 0.47	VR6	R	**471261**
50.00	**50.98**	47.95	1.18	1.28	2.56	0.94	4.53	1.97 ± 0.47	VR4	R	**412803**
		47.95	0.83	1.28	2.56	0.94	4.53	1.97 ± 0.47	VR6	R	**471281**
50.20	**52.17**	46.46	0.26	0.24	0.41	0.20	0.79	0.31 ± 0.06	VR3	R	**413002**
		46.46	0.26	0.24	0.41	0.20	0.79	0.31 ± 0.06	VR3	V	**413006**
50.00	**51.97**	46.46	0.59	0.56	0.98	0.39	1.77	0.79 ± 0.16	VR1	R	**413000**

Dimensions Shaft diameter range d_1 over	incl.	Seal inside diameter, free state d	Nominal seal height c	Seal seat width b_1	Nominal seal width b	Clearance D_1 (= d_1 +) D_1 max.	Counterface D (= d_1 +) D min.	Seal fitted width B_1	Design	Lip code	Designation
in		in							–	–	–
50.98	**51.77**	48.82	1.18	1.28	2.56	0.94	4.53	1.97 ± 0.47	VR4	R	**413003**
		48.82	0.83	1.28	2.56	0.94	4.53	1.97 ± 0.47	VR6	R	**471301**
51.77	**52.76**	49.57	1.18	1.28	2.56	0.94	4.53	1.97 ± 0.47	VR4	R	**413253**
		49.57	0.83	1.28	2.56	0.94	4.53	1.97 ± 0.47	VR6	R	**471326**
52.17	**54.13**	48.23	0.26	0.24	0.41	0.20	0.79	0.31 ± 0.06	VR3	R	**413502**
		48.23	0.26	0.24	0.41	0.20	0.79	0.31 ± 0.06	VR3	V	**413506**
51.97	**53.94**	48.23	0.59	0.56	0.98	0.39	1.77	0.79 ± 0.16	VR1	R	**413500**
52.76	**53.74**	50.43	1.18	1.28	2.56	0.94	4.53	1.97 ± 0.47	VR4	R	**413503**
		50.43	0.83	1.28	2.56	0.94	4.53	1.97 ± 0.47	VR6	R	**471351**
53.74	**54.72**	51.38	1.18	1.28	2.56	0.94	4.53	1.97 ± 0.47	VR4	R	**413753**
		51.38	0.83	1.28	2.56	0.94	4.53	1.97 ± 0.47	VR6	R	**471376**
54.13	**56.10**	50.00	0.26	0.24	0.41	0.20	0.79	0.31 ± 0.06	VR3	R	**414002**
		50.00	0.26	0.24	0.41	0.20	0.79	0.31 ± 0.06	VR3	V	**414006**
53.94	**55.91**	50.00	0.59	0.56	0.98	0.39	1.77	0.79 ± 0.16	VR1	R	**414000**
54.72	**55.71**	52.28	1.18	1.28	2.56	0.94	4.53	1.97 ± 0.47	VR4	R	**414003**
		52.28	0.83	1.28	2.56	0.94	4.53	1.97 ± 0.47	VR6	R	**471401**
55.71	**56.69**	53.15	1.18	1.28	2.56	0.94	4.53	1.97 ± 0.47	VR4	R	**414253**
56.10	**58.07**	51.77	0.26	0.24	0.41	0.20	0.79	0.31 ± 0.06	VR3	R	**414502**
		51.77	0.26	0.24	0.41	0.20	0.79	0.31 ± 0.06	VR3	V	**414506**
55.91	**57.87**	51.77	0.59	0.56	0.98	0.39	1.77	0.79 ± 0.16	VR1	R	**414500**
56.69	**57.68**	54.09	1.18	1.28	2.56	0.94	4.53	1.97 ± 0.47	VR4	R	**414503**
		54.09	0.83	1.28	2.56	0.94	4.53	1.97 ± 0.47	VR6	R	**471451**
57.68	**58.66**	55.00	1.18	1.28	2.56	0.94	4.53	1.97 ± 0.47	VR4	R	**414753**
		55.00	0.83	1.28	2.56	0.94	4.53	1.97 ± 0.47	VR6	R	**471476**
58.07	**60.04**	53.54	0.26	0.24	0.41	0.20	0.79	0.31 ± 0.06	VR3	R	**415002**
		53.54	0.26	0.24	0.41	0.20	0.79	0.31 ± 0.06	VR3	V	**415006**
57.87	**59.84**	53.54	0.59	0.56	0.98	0.39	1.77	0.79 ± 0.16	VR1	R	**415000**
58.66	**59.65**	55.87	1.18	1.28	2.56	0.94	4.53	1.97 ± 0.47	VR4	R	**415003**
		55.87	0.83	1.28	2.56	0.94	4.53	1.97 ± 0.47	VR6	R	**471501**
59.65	**60.63**	56.81	1.18	1.28	2.56	0.94	4.53	1.97 ± 0.47	VR4	R	**415253**
		56.81	0.83	1.28	2.56	0.94	4.53	1.97 ± 0.47	VR6	R	**471526**
60.04	**62.01**	55.31	0.26	0.24	0.41	0.20	0.79	0.31 ± 0.06	VR3	R	**415502**
		55.31	0.26	0.24	0.41	0.20	0.79	0.31 ± 0.06	VR3	V	**415506**
59.84	**61.81**	55.31	0.59	0.56	0.98	0.39	1.77	0.79 ± 0.16	VR1	R	**415500**
60.63	**61.81**	57.76	1.18	1.28	2.56	0.94	4.53	1.97 ± 0.47	VR4	R	**415503**
		57.76	0.83	1.28	2.56	0.94	4.53	1.97 ± 0.47	VR6	R	**471551**
61.81	**62.99**	58.86	1.18	1.28	2.56	0.94	4.53	1.97 ± 0.47	VR4	R	**415753**
		58.86	0.83	1.28	2.56	0.94	4.53	1.97 ± 0.47	VR6	R	**471576**
62.01	**63.98**	57.09	0.26	0.24	0.41	0.20	0.79	0.31 ± 0.06	VR3	R	**416002**
		57.09	0.26	0.24	0.41	0.20	0.79	0.31 ± 0.06	VR3	V	**416006**
61.81	**63.78**	57.09	0.59	0.56	0.98	0.39	1.77	0.79 ± 0.16	VR1	R	**416000**
62.99	**64.57**	60.00	1.18	1.28	2.56	0.94	4.53	1.97 ± 0.47	VR4	R	**416003**
		60.00	0.83	1.28	2.56	0.94	4.53	1.97 ± 0.47	VR6	R	**471601**
63.98	**65.94**	58.86	0.26	0.24	0.41	0.20	0.79	0.31 ± 0.06	VR3	R	**416502**
		58.86	0.26	0.24	0.41	0.20	0.79	0.31 ± 0.06	VR3	V	**416506**

d_1 **63.78–79.53** in

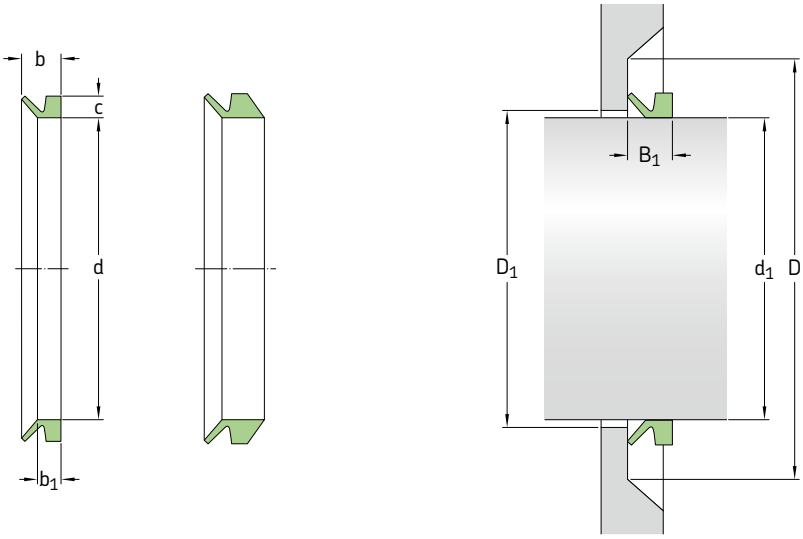

Dimensions									Design	Lip code	Designation
Shaft diameter range d_1 over	incl.	Seal inside diameter, free state d	Nominal seal height c	Seal seat width b_1	Nominal seal width b	Clearance D_1 (= d_1 +) D_1 max.	Counterface D (= d_1 +) D min.	Seal fitted width B_1			
in		in							–	–	–
63.78	**65.75**	58.86	0.59	0.56	0.98	0.39	1.77	0.79 ± 0.16	VR1	R	**416500**
64.57	**66.14**	61.38	1.18	1.28	2.56	0.94	4.53	1.97 ± 0.47	VR4	R	**416503**
		61.38	0.83	1.28	2.56	0.94	4.53	1.97 ± 0.47	VR6	R	**471651**
65.94	**67.91**	60.63	0.26	0.24	0.41	0.20	0.79	0.31 ± 0.06	VR3	R	**417002**
		60.63	0.26	0.24	0.41	0.20	0.79	0.31 ± 0.06	VR3	V	**417006**
65.75	**67.72**	60.63	0.59	0.56	0.98	0.39	1.77	0.79 ± 0.16	VR1	R	**417000**
66.14	**67.72**	62.83	1.18	1.28	2.56	0.94	4.53	1.97 ± 0.47	VR4	R	**417003**
		62.83	0.83	1.28	2.56	0.94	4.53	1.97 ± 0.47	VR6	R	**471701**
67.91	**69.88**	62.40	0.26	0.24	0.41	0.20	0.79	0.31 ± 0.06	VR3	R	**417502**
		62.40	0.26	0.24	0.41	0.20	0.79	0.31 ± 0.06	VR3	V	**417506**
67.72	**69.69**	62.40	0.59	0.56	0.98	0.39	1.77	0.79 ± 0.16	VR1	R	**417500**
67.72	**69.49**	64.25	1.18	1.28	2.56	0.94	4.53	1.97 ± 0.47	VR4	R	**417503**
		64.25	0.83	1.28	2.56	0.94	4.53	1.97 ± 0.47	VR6	R	**471751**
69.49	**71.26**	65.79	1.18	1.28	2.56	0.94	4.53	1.97 ± 0.47	VR4	R	**418003**
		65.79	0.83	1.28	2.56	0.94	4.53	1.97 ± 0.47	VR6	R	**471801**
69.88	**71.85**	64.17	0.26	0.24	0.41	0.20	0.79	0.31 ± 0.06	VR3	R	**418002**
		64.17	0.26	0.24	0.41	0.20	0.79	0.31 ± 0.06	VR3	V	**418006**
69.69	**71.65**	64.17	0.59	0.56	0.98	0.39	1.77	0.79 ± 0.16	VR1	R	**418000**
71.26	**73.03**	67.48	1.18	1.28	2.56	0.94	4.53	1.97 ± 0.47	VR4	R	**418503**
		67.48	0.83	1.28	2.56	0.94	4.53	1.97 ± 0.47	VR6	R	**471851**
71.85	**73.82**	65.94	0.26	0.24	0.41	0.20	0.79	0.31 ± 0.06	VR3	R	**418502**
		65.94	0.26	0.24	0.41	0.20	0.79	0.31 ± 0.06	VR3	V	**418506**
71.65	**73.62**	65.94	0.59	0.56	0.98	0.39	1.77	0.79 ± 0.16	VR1	R	**418500**
73.03	**75.00**	69.02	1.18	1.28	2.56	0.94	4.53	1.97 ± 0.47	VR4	R	**419003**
		69.02	0.83	1.28	2.56	0.94	4.53	1.97 ± 0.47	VR6	R	**471901**
73.82	**75.79**	67.72	0.26	0.24	0.41	0.20	0.79	0.31 ± 0.06	VR3	R	**419002**
		67.72	0.26	0.24	0.41	0.20	0.79	0.31 ± 0.06	VR3	V	**419006**
73.62	**75.59**	67.72	0.59	0.56	0.98	0.39	1.77	0.79 ± 0.16	VR1	R	**419000**

Dimensions									Design	Lip code	Designation
Shaft diameter range		Seal inside diameter, free state	Nominal seal height	Seal seat width	Nominal seal width	Clearance	Counterface	Seal fitted width			
d_1 over	incl.	d	c	b_1	b	D_1 (= d_1 +) D_1 max.	D (= d_1 +) D min.	B_1			
in		in							–	–	–
75.00	**76.97**	70.63	1.18	1.28	2.56	0.94	4.53	1.97 ± 0.47	VR4	R	**419503**
		70.63	0.83	1.28	2.56	0.94	4.53	1.97 ± 0.47	VR6	R	**471951**
75.79	**77.76**	69.49	0.26	0.24	0.41	0.20	0.79	0.31 ± 0.06	VR3	R	**419502**
		69.49	0.26	0.24	0.41	0.20	0.79	0.31 ± 0.06	VR3	V	**419506**
75.59	**77.56**	69.49	0.59	0.56	0.98	0.39	1.77	0.79 ± 0.16	VR1	R	**419500**
76.97	**79.13**	72.60	1.18	1.28	2.56	0.94	4.53	1.97 ± 0.47	VR4	R	**420003**
		72.60	0.83	1.28	2.56	0.94	4.53	1.97 ± 0.47	VR6	R	**472001**
77.76	**79.72**	71.26	0.26	0.24	0.41	0.20	0.79	0.31 ± 0.06	VR3	R	**420002**
		71.26	0.26	0.24	0.41	0.20	0.79	0.31 ± 0.06	VR3	V	**420006**
77.56	**79.53**	71.26	0.59	0.56	0.98	0.39	1.77	0.79 ± 0.16	VR1	R	**420000**

Machined seals

R06-P

R06-R

R07-P

R07-R

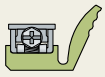

Wind turbines
HRC-PW

Special V-ring

SKF can manufacture a wide variety of seal profiles with different materials and sizes with its industry-leading SKF SEAL JET production system (see details on **page 56**). For additional information about costomized machined profiles, refer to publication *Customized machined seals – Product range* or contact SKF.

Sealproduction – SKF machine seals

C.4 Axial clamp seals

FOR LARGE AND VERY LARGE SHAFT DIAMETERS

Axial clamp seals

- Cost-Effective
- Versatile

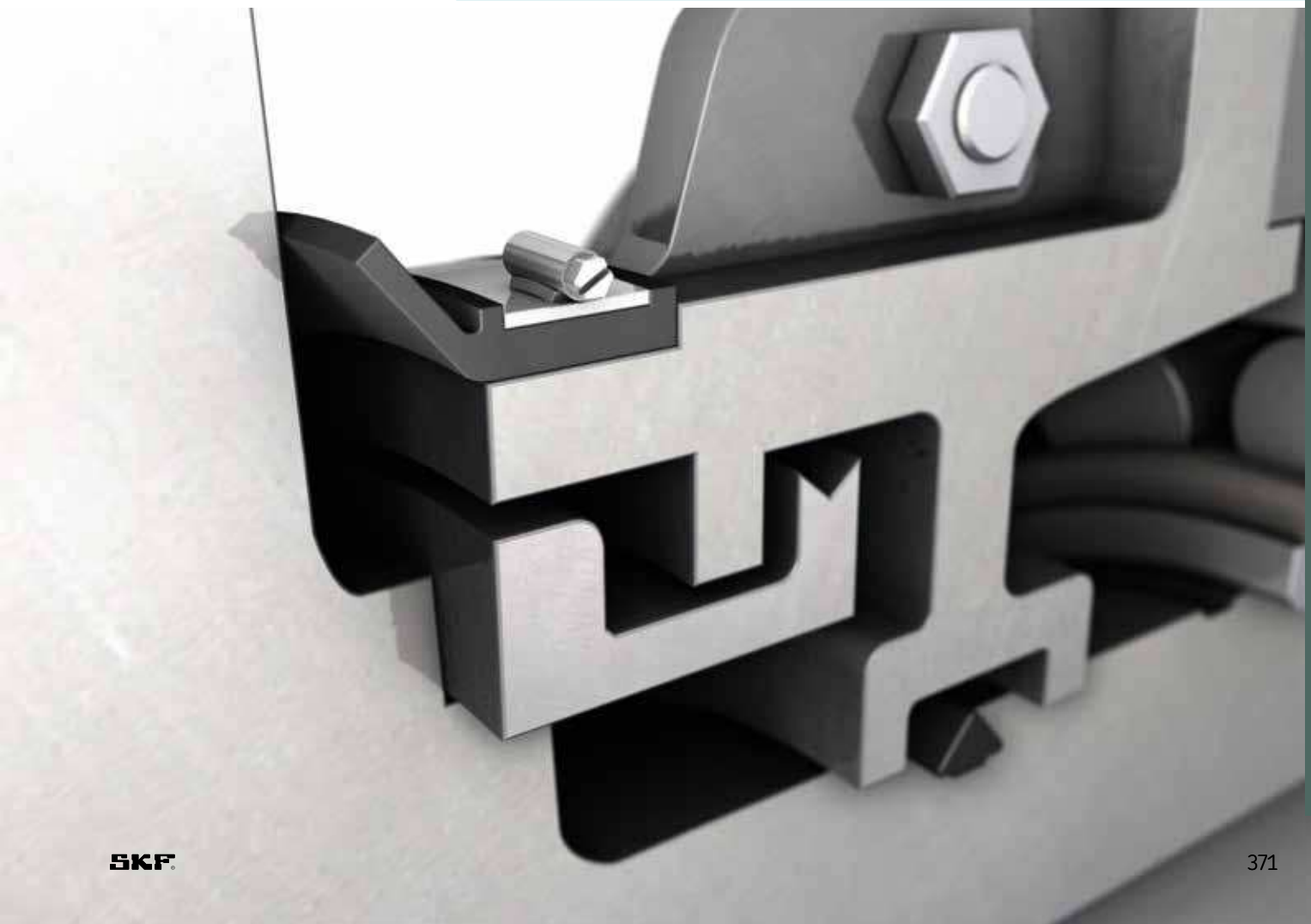

Axial clamp seals

General

SKF axial clamp seals are designed for large and very large shaft diameters. They are suitable for use as primary seals or as secondary seals in applications where the primary seals are subjected to excessive solid or fluid contaminants. Axial clamp seals do not rotate but seal axially against a rotating counterface.

SKF axial clamp seals are made of profiled strips of non-reinforced nitrile rubber and are held firmly in position by stainless steel band clamps. They are available for shaft diameters ranging from 150 to 4 600 mm (*5.9 to 181 in*).

The standard range of SKF axial clamp seals is intended for inch-size shaft diameters. Because axial clamp seals are typically installed with an approximate 25 mm (*0.984 in*) gap between the ends, they may also be used for metric shaft diameters.

Design of the sealing arrangement

To obtain reliable sealing performance, the seal seat diameter (d_1), seal seat width (b_1) and the seal fitted width (B_1) should meet the requirements listed in **table 1**. SKF also recommends that the seal should abut a shoulder to simplify alignment.

Finely turned counterfaces are adequate for axial clamp seals. The appropriate surface roughness values are R_a 2,5 µm (*115 µin*) and R_t 12 µm (*480 µin*).

Typically, after installation, CT axial clamp seals have an approximate 25 mm (1 in) gap between the ends. This should be arranged at the 6 o'clock position (→ **fig. 2** on **page 373**) to facilitate installation and drainage of contaminants.

Butt-joint seals are also available for certain applications.

Installation instructions

Axial clamp seals are supplied as rolled-up coils. They are placed in position on their seat in the housing and bolted lightly together. They are then pushed forward toward the counterface and the gap (or joint) between the two ends is arranged at the 6 o'clock position (→ **fig. 2**). The clamps are finally tightened. The torque applied to the clamp screws should not exceed 7 Nm.

Designs

SKF axial clamp seals are manufactured in two different designs:

- CT1 seals (→ **fig. 1**) have the basic design and are held in position by a band clamp. The maximum permissible axial displacement relative to the counterface is +2,4 mm (*0.094 in*).
- CT4 seals (→ **fig. 1**) are extra wide and are designed with two band clamps. The maximum axial displacement relative to the counterface is +4,8 mm (*0.189 in*).

Fig. 1

Axial clamp seal designs

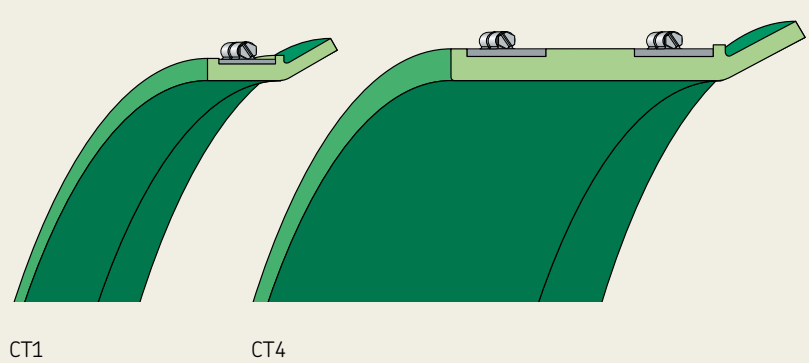

Table 1

Application tolerances

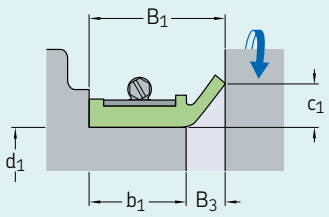

Dimension	Tolerance		Axial clamp seals CT1		CT4	
–	mm	*in*	mm	*in*	mm	*in*
Seal seat diameter, d_1	±1,6	*±0.063*	152,40–4 572	*6.000–180.000*	304,80–1 143	*12.000–45.000*
Seal fitted width, B_1	±0,8	*±0.031*	28,60–38,10	*1.125–1.500*	38,10–92,20	*1.500–3.750*
Seal seat width, b_1	±3,2	*±0.125*	17,50–27	*0.688–1.063*	27–84	*1.063–3.313*
Lip height, c_1	±0,8	*±0.031*	12,70	*0.500*	12,70	*0.500*
Gap width, B3 (max.)			11,10	*0.437*	11,10	*0.437*

Fig. 2

Sealing arrangement and installation

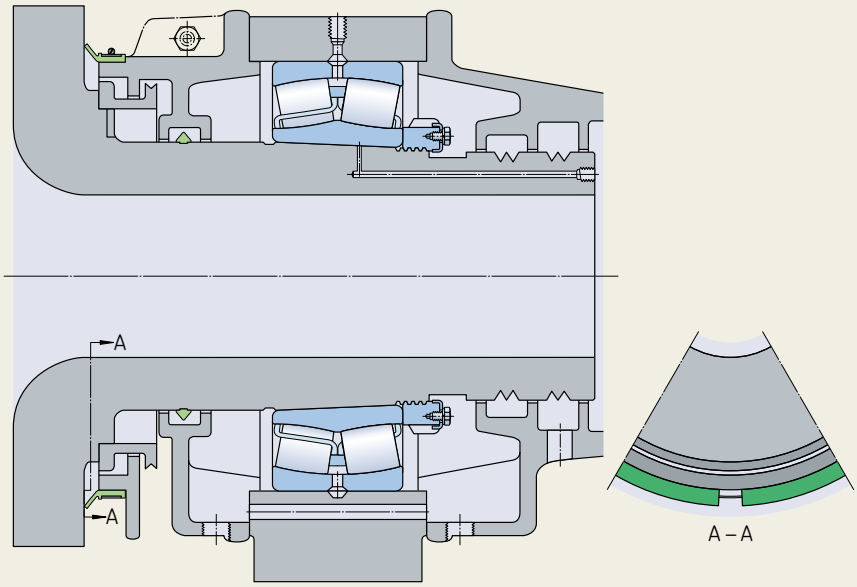

d_1 **168–1 105** mm

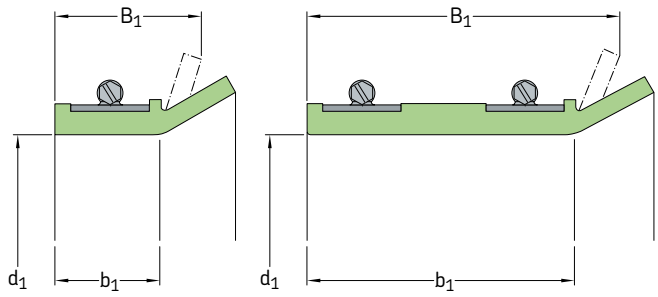

See **table 1, page 373** for application tolerances.

Dimensions Seal seat diameter d_1	Seal fitted width B_1	Seal seat width b_1	**Design**	**Designation**
mm			–	–
168	28,60	17,50	CT1	**594334**
168,30	28,60	17,50	CT1	**529489**
178	38,10	27	CT1	**523586**
185	30	18,90	CT1	**593637**
209,60	28,60	17,50	CT1	**527820**
219	28,60	17,50	CT1	**529490**
227	28,60	17,50	CT1	**531635**
228,60	28,60	17,50	CT1	**524204**
	28,60	17,50	CT1	**527819**
229	29	17,90	CT1	**528631**
254	28,60	17,50	CT1	**524205**
	28,60	17,50	CT1	**527806**
273	28,60	17,50	CT1	**594369**
280	28,60	17,50	CT1	**524206**
	31,80	20,70	CT1	**524928**
298,40	28,60	17,50	CT1	**593629**
305	31,80	20,70	CT1	**524208**
	38,10	27	CT1	**525582**
330	28,60	17,50	CT1	**524209**
	38,10	27	CT1	**523587**
350,80	38,10	27	CT1	**594110**
355,60	38,10	27	CT1	**530733**
	34,90	23,80	CT1	**593037**
380	38,10	27	CT1	**593171**
381	28,60	17,50	CT1	**594025**

Dimensions Seal seat diameter d_1	Seal fitted width B_1	Seal seat width b_1	**Design**	**Designation**
mm			–	–
387	28,60	17,50	CT1	**594954**
410	23,80	12,70	CT1	**595110**
413	88,90	77,80	CT4	**592934**
425	31,80	20,70	CT1	**523826**
	33,40	22,30	CT1	**524815**
432	38,10	27	CT1	**528535**
444,50	34,90	23,80	CT1	**525737**
445	31,80	20,70	CT1	**522679**
	34,90	23,80	CT1	**523547**
449,30	95,30	84,20	CT4	**528070**
470	28,60	17,50	CT1	**525708**
	31,80	20,70	CT1	**526192**
495	28,60	17,50	CT1	**594181**
508	31,80	20,70	CT1	**524587**
533	32	20,90	CT1	**594241**
546	31,80	20,70	CT1	**524599**
	95,30	84,20	CT4	**526741**
554	31,80	20,70	CT1	**524210**
557	28,60	17,50	CT1	**524211**
559	31,80	20,70	CT1	**524347**
571,50	31,80	20,70	CT1	**524212**
578	34,90	23,80	CT1	**524657**
594	34,90	23,80	CT1	**525627**
595	28,60	17,50	CT1	**525031**

Dimensions Seal seat diameter d_1	Seal fitted width B_1	Seal seat width b_1	Design	Designation
mm			–	–
597	34,90	23,80	CT1	**524364**
600	30	18,90	CT1	**594431**
603	31,80	20,70	CT1	**524365**
	34,90	23,80	CT1	**523184**
	46	34,90	CT4	**528651**
603,30	34,90	23,80	CT1	**525637**
	46	34,90	CT4	**528267**
616	47,60	36,50	CT4	**529276**
629	31,80	20,70	CT1	**524213**
638	34,90	23,80	CT1	**524214**
655	40	28,90	CT4	**594784**
660	34,90	23,80	CT1	**524591**
684	28,60	17,50	CT1	**524215**
	73	61,90	CT4	**593604**
692	34,90	23,80	CT1	**524592**
705	34,90	23,80	CT1	**524216**
	60,30	49,20	CT4	**528268**
711	31,80	20,70	CT1	**527232**
732	28,60	17,50	CT1	**525032**
737	38,10	27	CT1	**524940**
	44,50	33,40	CT4	**528269**
746	38,10	27	CT1	**524853**
	39,70	28,60	CT4	**528270**
755	34,90	23,80	CT1	**524217**
	38,10	27	CT1	**524218**
755,70	38,10	27	CT1	**524973**
764	28,60	17,50	CT1	**525033**
787	31,80	20,70	CT1	**525212**
800	31,80	20,70	CT1	**528210**
806	31,80	20,70	CT1	**526715**
818	31,80	20,70	CT1	**525034**
819,20	31,80	20,70	CT1	**524294**
822,30	31,80	20,70	CT1	**593949**
825	28,60	17,50	CT1	**594785**
	31,80	20,70	CT1	**524367**
840	31,80	20,70	CT1	**526867**
856	31,80	20,70	CT1	**524219**
876	38,10	27	CT1	**523063**
889	31,80	20,70	CT1	**524220**
900	31,80	20,70	CT1	**524221**

Dimensions Seal seat diameter d_1	Seal fitted width B_1	Seal seat width b_1	Design	Designation
mm			–	–
902	38,10	27	CT1	**524222**
914	28,60	17,50	CT1	**528416**
	30,20	19,10	CT1	**524223**
	38,10	27	CT1	**524224**
914,40	28,60	17,50	CT1	**593606**
	31,80	20,70	CT1	**530466**
929	28,60	17,50	CT1	**593285**
	75,20	64,10	CT4	**594202**
937	34,90	23,80	CT1	**523154**
940	38,10	27	CT1	**525320**
943	31,80	20,70	CT1	**524768**
946	31,80	20,70	CT1	**524368**
949	31,80	20,70	CT1	**526246**
952	31,80	20,70	CT1	**526582**
962	31,80	20,70	CT1	**524225**
965	31,80	20,70	CT1	**524226**
1 003	28,60	17,50	CT1	**529452**
	31,80	20,70	CT1	**526806**
1 013	34,90	23,80	CT1	**523584**
	36,50	25,40	CT1	**529379**
1 016	36,50	25,40	CT1	**525035**
	38,10	27	CT1	**527903**
1 018	54,80	43,70	CT4	**530396**
1 022	31,80	20,70	CT1	**525426**
1 029	38,10	27	CT1	**528532**
1 038	38,10	27	CT1	**525633**
1 041	38,10	27	CT1	**524227**
1 045	38,10	27	CT1	**525036**
1 051	33,40	22,30	CT1	**530448**
1 054	31,80	20,70	CT1	**527474**
	38,10	27	CT1	**524228**
1 064	41,30	30,20	CT4	**528272**
1 066	63,50	52,40	CT4	**528271**
1 066,90	38,10	27	CT4	**594494**
1 080	28,60	17,50	CT1	**523133**
1 101,70	31,80	20,70	CT1	**524909**
1 105	38,10	27	CT1	**524369**

d_1 **1 118–4 142** mm

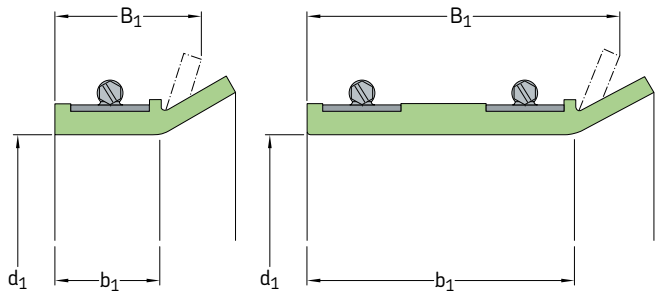

See **table 1, page 376** for application tolerances.

Dimensions Seal seat diameter d_1	Seal fitted width B_1	Seal seat width b_1	**Design**	**Designation**
mm			–	–
1 118	31,80	20,70	CT1	**524370**
	34,90	23,80	CT1	**528415**
	38,10	27	CT1	**524229**
	38,10	27	CT1	**593180**
	44,50	33,40	CT4	**528002**
	44,50	33,40	CT4	**528273**
1 140	38,10	27	CT1	**522676**
1 181	31,80	20,70	CT1	**529086**
1 193,80	38,10	27	CT1	**527211**
1 206	31,80	27	CT1	**525091**
	34,90	23,80	CT1	**526021**
	38,10	27	CT1	**524230**
1 206,50	30,20	19,10	CT1	**530606**
1 210	38,10	27	CT1	**522677**
1 225	38,10	27	CT1	**524231**
1 241	38,10	27	CT1	**524371**
1 245	31,80	20,70	CT1	**522828**
1 270	34,90	23,80	CT1	**529129**
1 286	31,80	20,70	CT1	**525953**
1 302	34,90	23,80	CT1	**529130**
1 308	31,80	20,70	CT1	**524372**
	34,90	23,80	CT1	**530661**
	38,10	27	CT1	**524232**
1 321	38,10	27	CT1	**528927**
1 346	31,80	20,70	CT1	**528526**
1 397	31,80	20,70	CT1	**526807**
1 448	31,80	20,70	CT1	**528525**

Dimensions Seal seat diameter d_1	Seal fitted width B_1	Seal seat width b_1	**Design**	**Designation**
mm			–	–
1 497,60	41,30	30,20	CT4	**594163**
1 613	31,80	20,70	CT1	**526808**
1 721	31,80	20,70	CT1	**528975**
1 778	31,80	20,70	CT1	**526809**
1 803	31,80	20,70	CT1	**524373**
1 854	38,10	27	CT1	**531456**
1 924	31,80	20,70	CT1	**525092**
1 968	31,80	20,70	CT1	**529517**
2 540	38,10	27	CT1	**522856**
2 616	31,80	20,70	CT1	**594083**
4 142	31,80	20,70	CT1	**594682**

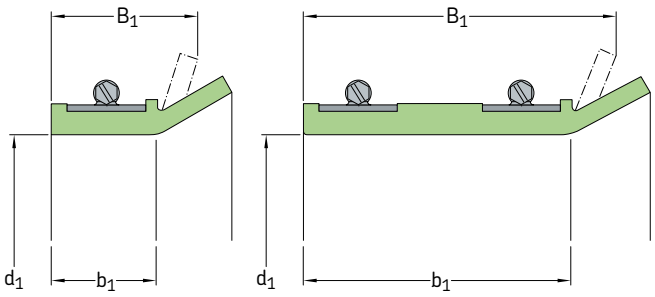

See **table 1, page 377** for application tolerances.

Dimensions Seal seat diameter d_1	Seal fitted width B_1	Seal seat width b_1	**Design**	**Designation**
in			–	–
6.614	1.126	0.689	CT1	**594334**
6.626	1.126	0.689	CT1	**529489**
7.008	1.500	1.063	CT1	**523586**
7.284	1.181	0.744	CT1	**593637**
8.252	1.126	0.689	CT1	**527820**
8.622	1.126	0.689	CT1	**529490**
8.937	1.126	0.689	CT1	**531635**
9.000	1.126	0.689	CT1	**524204**
9.000	1.126	0.689	CT1	**527819**
9.016	1.142	0.705	CT1	**528631**
10.000	1.126	0.689	CT1	**524205**
10.000	1.126	0.689	CT1	**527806**
10.748	1.126	0.689	CT1	**594369**
11.024	1.126	0.689	CT1	**524206**
11.024	1.252	0.815	CT1	**524928**
11.748	1.126	0.689	CT1	**593629**
12.008	1.252	0.815	CT1	**524208**
12.008	1.500	1.063	CT1	**525582**
12.992	1.126	0.689	CT1	**524209**
12.992	1.500	1.063	CT1	**523587**
13.811	1.500	1.063	CT1	**594110**
14.000	1.500	1.063	CT1	**530733**
14.000	1.374	0.937	CT1	**593037**
14.961	1.500	1.063	CT1	**593171**
15.000	1.126	0.689	CT1	**594025**
15.236	1.126	0.689	CT1	**594954**
16.142	0.937	0.500	CT1	**595110**
16.260	3.500	3.063	CT4	**592934**
16.732	1.252	0.815	CT1	**523826**
16.732	1.315	0.878	CT1	**524815**
17.008	1.500	1.063	CT1	**528535**
17.500	1.374	0.937	CT1	**525737**
17.520	1.252	0.815	CT1	**522679**
17.520	1.374	0.937	CT1	**523547**
17.689	3.752	3.315	CT4	**528070**

Dimensions Seal seat diameter d_1	Seal fitted width B_1	Seal seat width b_1	**Design**	**Designation**
in			–	–
18.504	1.126	0.689	CT1	**525708**
18.504	1.252	0.815	CT1	**526192**
19.488	1.126	0.689	CT1	**594181**
20.000	1.252	0.815	CT1	**524587**
20.984	1.260	0.823	CT1	**594241**
21.496	1.252	0.815	CT1	**524599**
21.496	3.752	3.315	CT4	**526741**
21.811	1.252	0.815	CT1	**524210**
21.929	1.126	0.689	CT1	**524211**
22.008	1.252	0.815	CT1	**524347**
22.500	1.252	0.815	CT1	**524212**
22.756	1.374	0.937	CT1	**524657**
23.386	1.374	0.937	CT1	**525627**
23.426	1.126	0.689	CT1	**525031**
23.504	1.374	0.937	CT1	**524364**
23.622	1.181	0.744	CT1	**594431**
23.740	1.252	0.815	CT1	**524365**
23.740	1.374	0.937	CT1	**523184**
23.740	1.811	1.374	CT4	**528651**
23.752	1.374	0.937	CT1	**525637**
23.752	1.811	1.374	CT4	**528267**
24.252	1.874	1.437	CT4	**529276**
24.764	1.252	0.815	CT1	**524213**
25.118	1.374	0.937	CT1	**524214**
25.787	1.575	1.138	CT4	**594784**
25.984	1.374	0.937	CT1	**524591**
26.929	1.126	0.689	CT1	**524215**
26.929	2.874	2.437	CT4	**593604**
27.244	1.374	0.937	CT1	**524592**
27.756	1.374	0.937	CT1	**524216**
27.756	2.374	1.937	CT4	**528268**
27.992	1.252	0.815	CT1	**527232**
28.819	1.126	0.689	CT1	**525032**
29.016	1.500	1.063	CT1	**524940**
29.016	1.752	1.315	CT4	**528269**

d_1 **29.370–163.071** in

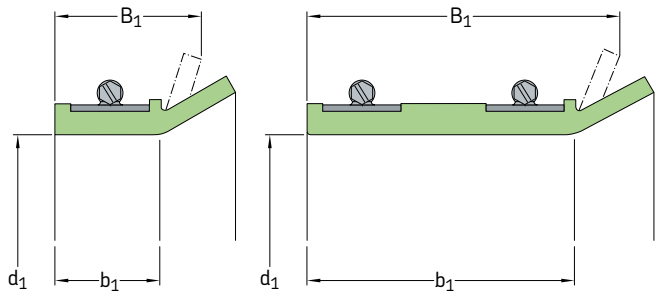

See **table 1, page 373** for application tolerances.

Dimensions Seal seat diameter d_1	Seal fitted width B_1	Seal seat width b_1	**Design**	**Designation**
in			–	–
29.370	1.500	1.063	CT1	**524853**
29.370	1.563	1.126	CT4	**528270**
29.724	1.374	0.937	CT1	**524217**
29.724	1.500	1.063	CT1	**524218**
29.752	1.500	1.063	CT1	**524973**
30.079	1.126	0.689	CT1	**525033**
30.984	1.252	0.815	CT1	**525212**
31.496	1.252	0.815	CT1	**528210**
31.732	1.252	0.815	CT1	**526715**
32.205	1.252	0.815	CT1	**525034**
32.252	1.252	0.815	CT1	**524294**
32.374	1.252	0.815	CT1	**593949**
32.480	1.126	0.689	CT1	**594785**
32.480	1.252	0.815	CT1	**524367**
33.071	1.252	0.815	CT1	**526867**
33.701	1.252	0.815	CT1	**524219**
34.488	1.500	1.063	CT1	**523063**
35.000	1.252	0.815	CT1	**524220**
35.433	1.252	0.815	CT1	**524221**
35.512	1.500	1.063	CT1	**524222**
35.984	1.126	0.689	CT1	**528416**
35.984	1.189	0.752	CT1	**524223**
35.984	1.500	1.063	CT1	**524224**
36.000	1.126	0.689	CT1	**593606**
36.000	1.252	0.815	CT1	**530466**
36.575	1.126	0.689	CT1	**593285**
36.575	2.961	2.524	CT4	**594202**
36.890	1.374	0.937	CT1	**523154**
37.008	1.252	0.815	CT1	**526246**
37.008	1.500	1.063	CT1	**525320**
37.126	1.252	0.815	CT1	**524768**
37.244	1.252	0.815	CT1	**524368**
37.480	1.252	0.815	CT1	**526582**
37.874	1.252	0.815	CT1	**524225**
37.992	1.252	0.815	CT1	**524226**

Dimensions Seal seat diameter d_1	Seal fitted width B_1	Seal seat width b_1	**Design**	**Designation**
in			–	–
39.488	1.126	0.689	CT1	**529452**
39.488	1.252	0.815	CT1	**526806**
39.882	1.374	0.937	CT1	**523584**
39.882	1.437	1.000	CT1	**529379**
40.000	1.437	1.000	CT1	**525035**
40.000	1.500	1.063	CT1	**527903**
40.079	2.156	1.721	CT4	**530396**
40.236	1.252	0.815	CT1	**525426**
40.512	1.500	1.063	CT1	**528532**
40.866	1.500	1.063	CT1	**525633**
40.984	1.500	1.063	CT1	**524227**
41.142	1.500	1.063	CT1	**525036**
41.378	1.315	0.878	CT1	**530448**
41.496	1.252	0.815	CT1	**527474**
41.496	1.500	1.063	CT1	**524228**
41.890	1.626	1.189	CT4	**528272**
41.968	2.500	2.063	CT4	**528271**
42.004	1.500	1.063	CT4	**594494**
42.520	1.126	0.689	CT1	**523133**
43.374	1.252	0.815	CT1	**524909**
43.504	1.500	1.063	CT1	**524369**
44.016	1.252	0.815	CT1	**524370**
44.016	1.374	0.937	CT1	**528415**
44.016	1.500	1.063	CT1	**524229**
44.016	1.500	1.063	CT1	**593180**
44.016	1.752	1.315	CT4	**528002**
44.016	1.752	1.315	CT4	**528273**
44.882	1.500	1.063	CT1	**522676**
46.496	1.252	0.815	CT1	**529086**
47.000	1.500	1.063	CT1	**527211**
47.480	1.252	1.063	CT1	**525091**
47.480	1.374	0.937	CT1	**526021**
47.480	1.500	1.063	CT1	**524230**
47.500	1.189	0.752	CT1	**530606**
47.638	1.500	1.063	CT1	**522677**

Dimensions Seal seat diameter d_1	Seal fitted width B_1	Seal seat width b_1	**Design**	**Designation**
in			–	–
48.228	1.500	1.063	CT1	**524231**
48.858	1.500	1.063	CT1	**524371**
49.016	1.252	0.815	CT1	**522828**
50.000	1.374	0.937	CT1	**529129**
50.630	1.252	0.815	CT1	**525953**
51.260	1.374	0.937	CT1	**529130**
51.496	1.252	0.815	CT1	**524372**
51.496	1.374	0.937	CT1	**530661**
51.496	1.500	1.063	CT1	**524232**
52.008	1.500	1.063	CT1	**528927**
52.992	1.252	0.815	CT1	**528526**
55.000	1.252	0.815	CT1	**526807**
57.008	1.252	0.815	CT1	**528525**
58.606	1.626	1.189	CT4	**594163**
63.504	1.252	0.815	CT1	**526808**
67.756	1.252	0.815	CT1	**528975**
70.000	1.252	0.815	CT1	**526809**
70.984	1.252	0.815	CT1	**524373**
72.992	1.500	1.063	CT1	**531456**
75.748	1.252	0.815	CT1	**525092**
77.480	1.252	0.815	CT1	**529517**
100.00	1.500	1.063	CT1	**522856**
102.992	1.252	0.815	CT1	**594083**
163.071	1.252	0.815	CT1	**594082**

US Designation index

Numerical designation	Design	Material	Inner diameter	Outer diameter	Width	Metric or inch value
1850	HM1	NBR	0.188	0.500	0.125	Inch
2450	HM14	NBR	0.250	0.499	0.188	Inch
2452	HMA14	FKM	0.250	0.499	0.188	Inch
2470	HM14	NBR	0.250	0.562	0.188	Inch
2514	CRW1	NBR	0.250	0.749	0.250	Inch
3044	HM4	NBR	0.313	0.500	0.125	Inch
3050	HM1	NBR	0.313	0.626	0.203	Inch
3060	HM14	NBR	0.313	0.626	0.156	Inch
3061	HM14	FKM	0.313	0.626	0.156	Inch
3080	HM14	NBR	0.313	0.633	0.141	Inch
3086	HM14	NBR	0.313	0.862	0.250	Inch
3094	CRWA5	NBR	0.313	0.686	0.313	Inch
3101	CRWA5	NBR	0.313	0.749	0.250	Inch
3103	CRWA5	FKM	0.313	0.749	0.250	Inch
3140	HM14	NBR	0.313	0.749	0.250	Inch
3141	HM3	NBR	0.313	0.750	0.250	Inch
3171	CRWA5	NBR	0.313	0.999	0.313	Inch
3621	HM3	NBR	0.375	0.563	0.094	Inch
3632	HMA10	ACM	0.375	0.628	0.197	Inch
3645	HM14	NBR	0.375	0.687	0.156	Inch
3680	CRWA1	NBR	0.375	0.750	0.250	Inch
3683	HM14	NBR	0.375	0.749	0.250	Inch
3687	CRW1	NBR	0.375	0.749	0.250	Inch
3688	CRW1	FKM	0.375	0.749	0.250	Inch
3689	CRW5	NBR	0.375	0.749	0.250	Inch
3719	CRW1	ACM	0.375	0.836	0.188	Inch
3725	CRW1	NBR	0.375	0.875	0.250	Inch
3727	HM14	NBR	0.375	0.875	0.250	Inch
3751	CRW1	NBR	0.375	0.999	0.250	Inch
3752	CRW1	FKM	0.375	0.999	0.250	Inch
3806	CRW1	NBR	0.375	1.124	0.250	Inch
3807	CRW5	FKM	0.375	1.124	0.375	Inch
4010	HM14	NBR	0.404	0.620	0.188	Inch
4012	HM14	NBR	0.404	0.862	0.250	Inch
4231	HM14	NBR	0.438	0.836	0.188	Inch
4249	CRW1	ACM	0.438	0.875	0.250	Inch
4251	CRW1	NBR	0.438	0.875	0.250	Inch
4256	HM8	NBR	0.438	0.879	0.180	Inch
4261	CRWA1	NBR	0.438	0.875	0.375	Inch
4262	CRWA1	FKM	0.438	0.875	0.375	Inch
4340	HM14	NBR	0.438	0.999	0.250	Inch
4355	CRW1	NBR	0.438	0.999	0.375	Inch
4356	CRW1	FKM	0.438	0.999	0.250	Inch
4390	CRW1	NBR	0.438	1.124	0.250	Inch
4623	HM14	ACM	0.469	0.836	0.188	Inch
4628	HM14	NBR	0.469	0.875	0.219	Inch
4911	HM3	NBR	0.500	0.688	0.094	Inch
4912	HM14	NBR	0.500	0.750	0.125	Inch
4914	HM14	NBR	0.500	0.820	0.156	Inch
4923	HM14	NBR	0.500	0.843	0.250	Inch
4925	HM14	NBR	0.500	0.875	0.125	Inch
4931	CRW1	NBR	0.500	0.875	0.250	Inch
4932	CRW1	FKM	0.500	0.875	0.250	Inch
4933	CRWA1	FKM	0.500	0.875	0.250	Inch
4935	CRWA1	FKM	0.500	0.875	0.250	Inch
4936	CRW1	XNBR	0.500	0.875	0.250	Inch
4938	HM14	NBR	0.500	0.875	0.250	Inch
4939	CRWA1	NBR	0.500	0.875	0.313	Inch
4940	CRWA5	NBR	0.500	0.875	0.313	Inch
4941	CRWA5	FKM	0.500	0.875	0.313	Inch
4943	CRW1	NBR	0.500	0.987	0.250	Inch
4950	HM14	NBR	0.500	0.999	0.188	Inch
4980	CRW1	FKM	0.500	0.999	0.250	Inch
4984	CRW1	NBR	0.500	0.999	0.250	Inch
4985	CRWA1	NBR	0.500	0.999	0.250	Inch
4990	HM14	NBR	0.500	0.999	0.250	Inch
4991	CRWA5	FKM	0.500	0.999	0.250	Inch
4996	CRWA5	NBR	0.500	0.999	0.313	Inch
5046	CRW1	ACM	0.500	1.124	0.313	Inch
5062	CRWA1	NBR	0.500	1.124	0.250	Inch
5066	CRW1	FKM	0.500	1.124	0.250	Inch
5067	CRWA1	FKM	0.500	1.124	0.250	Inch
5068	CRW1	NBR	0.500	1.124	0.250	Inch
5069	CRWA5	NBR	0.500	1.124	0.250	Inch
5072	CRWA5	FKM	0.500	1.124	0.250	Inch
5085	HM14	NBR	0.500	1.124	0.250	Inch
5133	CRW1	NBR	0.500	1.250	0.250	Inch
5150	CRW1	NBR	0.500	1.375	0.250	Inch
5151	CRW1	FKM	0.500	1.375	0.250	Inch
5321	CRWA1	MVQ	0.531	0.999	0.250	Inch
5334	CRSA1	NBR	0.531	1.124	0.313	Inch
5385	CRW1	ACM	0.546	0.875	0.250	Inch
5399	HM21	NBR	0.551	1.124	0.203	Inch
5500	HM3	NBR	0.563	0.750	0.094	Inch
5522	HM14	NBR	0.563	0.875	0.188	Inch
5523	CRW1	XNBR	0.563	0.875	0.188	Inch
5541	CRW1	NBR	0.563	0.999	0.250	Inch
5542	CRW1	FKM	0.563	0.999	0.250	Inch
5543	CRW1	NBR	0.563	0.999	0.250	Inch
5569	HM14	NBR	0.563	0.999	0.219	Inch
5605	CRW1	NBR	0.554	0.999	0.250	Inch
5606	CRWA1	NBR	0.563	0.999	0.250	Inch
5650	CRW1	FKM	0.563	1.124	0.250	Inch
5652	CRW1	NBR	0.563	1.124	0.250	Inch
5662	CRWA1	NBR	0.563	1.124	0.250	Inch
5685	HM14	NBR	0.563	1.124	0.250	Inch
5707	CRW1	NBR	0.563	1.250	0.250	Inch
5756	CRW1	NBR	0.563	1.375	0.250	Inch
5926	CRW1	NBR	0.594	1.124	0.313	Inch
5946	HM14	NBR	0.594	1.124	0.250	Inch
5950	CRSA1	NBR	0.594	1.250	0.313	Inch
5966	CRSA1	NBR	0.594	1.375	0.313	Inch
6105	HM3	NBR	0.625	0.812	0.094	Inch
6106	HM3	FKM	0.625	0.813	0.094	Inch
6125	HM14	NBR	0.625	0.933	0.188	Inch
6126	HM14	FKM	0.625	0.933	0.188	Inch
6130	HM14	NBR	0.625	0.937	0.188	Inch
6134	CRW1	NBR	0.625	0.987	0.250	Inch
6139	CRWA1	FKM	0.625	0.999	0.250	Inch
6141	CRWA1	NBR	0.625	0.999	0.250	Inch
6143	CRW1	NBR	0.625	0.999	0.250	Inch
6151	CRWA5	NBR	0.625	0.999	0.250	Inch
6152	HM14	ACM	0.625	1.000	0.125	Inch
6157	CRW1	NBR	0.625	1.063	0.250	Inch
6158	HM14	NBR	0.625	1.063	0.250	Inch
6191	CRW5	NBR	0.625	1.124	0.250	Inch
6225	HM14	NBR	0.625	1.124	0.250	Inch
6229	CRWA5	NBR	0.625	1.124	0.375	Inch
6231	CRWA5	FKM	0.625	1.124	0.374	Inch
6242	CRW5	NBR	0.625	1.126	0.250	Inch
6243	HM14	NBR	0.624	1.131	0.188	Inch
6247	CRWA1	NBR	0.625	1.181	0.250	Inch
6248	CRWA1	FKM	0.625	1.181	0.256	Inch
6280	CRWA5	NBR	0.625	1.250	0.313	Inch
6285	CRWA5	FKM	0.625	1.250	0.313	Inch
6323	HM14	NBR	0.625	1.250	0.250	Inch
6335	HM14	NBR	0.625	1.259	0.250	Inch
6370	HM14	NBR	0.625	1.375	0.250	Inch
6371	CRW5	ACM	0.625	1.375	0.250	Inch
6372	CRW1	NBR	0.625	1.375	0.250	Inch
6373	CRWA1	NBR	0.625	1.375	0.250	Inch
6383	CRWA1	FKM	0.625	1.375	0.250	Inch
6388	CRWA5	NBR	0.625	1.375	0.375	Inch
6391	CRWHA1	NBR	0.625	1.377	0.250	Inch
6393	CRW5	FKM	0.625	1.500	0.313	Inch
6422	CRW1	NBR	0.625	1.499	0.250	Inch
6523	CRW1	NBR	0.656	1.124	0.313	Inch
6541	CRW1	NBR	0.656	1.250	0.250	Inch
6556	CRW1	NBR	0.656	1.375	0.313	Inch
6582	CRW1	NBR	0.656	1.575	0.250	Inch
6595	CRW1	NBR	0.669	0.999	0.188	Inch
6597	CRW1	FKM	0.669	1.573	0.281	Inch
6720	HM14	NBR	0.688	0.999	0.188	Inch
6728	CRW1	NBR	0.669	1.064	0.250	Inch
6729	CRW1	NBR	0.669	1.064	0.250	Inch
6738	CRW1	NBR	0.688	1.124	0.190	Inch

Numerical designation	Design	Material	Inner diameter	Outer diameter	Width	Metric or inch value
6741	CRW1	NBR	0.688	1.124	0.250	Inch
6743	CRW1	NBR	0.688	1.124	0.250	Inch
6745	CRW1	FKM	0.688	1.124	0.250	Inch
6759	HM14	NBR	0.688	1.124	0.250	Inch
6763	CRW1	NBR	0.688	1.188	0.188	Inch
6765	CRWA1	NBR	0.688	1.250	0.256	Inch
6767	CRW1	NBR	0.688	1.250	0.313	Inch
6768	CRW1	FKM	0.688	1.250	0.313	Inch
6769	CRWH1	FKM	0.688	1.252	0.220	Inch
6770	CRW1	FKM	0.688	1.187	0.188	Inch
6806	HM14	NBR	0.669	1.250	0.250	Inch
6814	CRWA1	NBR	0.688	1.375	0.250	Inch
6816	CRW1	NBR	0.688	1.375	0.313	Inch
6817	CRW1	FKM	0.688	1.375	0.313	Inch
6823	CRW1	FKM	0.625	1.124	0.250	Inch
6825	CRWA1	FKM	0.625	1.124	0.250	Inch
6903	CRW1	NBR	0.625	1.124	0.250	Inch
6904	CRWA1	NBR	0.625	1.124	0.250	Inch
6909	CRW1	FKM	0.625	1.250	0.250	Inch
6915	HM14	NBR	0.688	1.375	0.125	Inch
6916	CRWA1	NBR	0.625	1.250	0.250	Inch
6920	HM14	NBR	0.688	1.375	0.250	Inch
6925	CRW1	NBR	0.625	1.250	0.250	Inch
6935	CRW1	NBR	0.688	1.499	0.250	Inch
6979	CRW1	FKM	0.625	1.375	0.250	Inch
6990	CRWA1	NBR	0.688	1.624	0.250	Inch
7089	CRSA1	ACM	0.709	1.339	0.315	Inch
7408	HM14	XNBR	0.750	1.000	0.125	Inch
7409	HM8	NBR	0.750	1.004	0.156	Inch
7410	HM14	NBR	0.750	0.999	0.125	Inch
7411	HM14	NBR	0.750	1.006	0.125	Inch
7412	HMA3	NBR	0.750	1.031	0.313	Inch
7413	HM14	NBR	0.750	1.062	0.188	Inch
7414	CRW1	NBR	0.750	1.124	0.188	Inch
7415	HM14	NBR	0.750	1.124	0.156	Inch
7417	CRW1	FKM	0.750	1.124	0.188	Inch
7421	HM14	NBR	0.750	1.187	0.156	Inch
7434	CRWA5	NBR	0.750	1.250	0.250	Inch
7438	CRW1	NBR	0.750	1.250	0.250	Inch
7439	CRW1	NBR	0.750	1.250	0.188	Inch
7440	CRW1	NBR	0.750	1.250	0.250	Inch
7443	CRWA1	NBR	0.750	1.250	0.250	Inch
7449	CRWA5	NBR	0.750	1.250	0.375	Inch
7450	CRW1	FKM	0.750	1.250	0.250	Inch
7453	CRWA1	FKM	0.750	1.250	0.250	Inch
7455	CRWA1	FKM	0.750	1.250	0.250	Inch
7464	HM14	NBR	0.750	1.250	0.250	Inch
7467	CRW1	FKM	0.750	1.249	0.188	Inch
7469	CRW1	NBR	0.750	1.252	0.188	Inch
7473	CRW1	NBR	0.750	1.260	0.250	Inch
7474	CRW1	NBR	0.750	1.312	0.250	Inch
7475	CRWA1	NBR	0.750	1.312	0.250	Inch
7477	HM14	NBR	0.750	1.259	0.250	Inch
7478	CRW1	NBR	0.750	1.250	0.188	Inch
7509	CRWA5	FKM	0.750	1.375	0.250	Inch
7512	CRW1	NBR	0.750	1.375	0.250	Inch
7513	CRWA1	NBR	0.750	1.375	0.250	Inch
7515	CRW1	FKM	0.750	1.375	0.250	Inch
7517	CRWA1	FKM	0.750	1.375	0.250	Inch
7533	CRWA1	ACM	0.750	1.375	0.250	Inch
7536	HM14	NBR	0.750	1.375	0.250	Inch
7537	HM14	ACM	0.750	1.375	0.250	Inch
7550	HM14	NBR	0.750	1.437	0.250	Inch
7567	CRW1	FKM	0.750	1.499	0.250	Inch
7571	HM14	NBR	0.750	1.499	0.250	Inch
7572	CRW1	NBR	0.750	1.499	0.250	Inch
7573	CRWA1	NBR	0.750	1.499	0.250	Inch
7591	CRW1	NBR	0.750	1.575	0.250	Inch
7623	CRW1	FKM	0.750	1.624	0.250	Inch
7624	CRWA1	FKM	0.750	1.624	0.250	Inch
7627	CRW1	NBR	0.750	1.624	0.250	Inch
7628	CRWA1	NBR	0.750	1.624	0.250	Inch
7636	CRW1	NBR	0.750	1.752	0.250	Inch
7638	CRWA1	FKM	0.750	1.752	0.250	Inch
7661	CRW1	NBR	0.750	1.828	0.250	Inch
7690	CRW1	NBR	0.750	1.874	0.250	Inch
7693	CRW1	NBR	0.750	2.047	0.313	Inch
7740	CRW1	NBR	0.787	1.124	0.188	Inch
7824	CRW1	FKM	0.781	1.375	0.313	Inch
7829	CRW1	NBR	0.781	1.375	0.313	Inch
7831	HM14	NBR	0.781	1.375	0.197	Inch
7849	CRW1	NBR	0.781	1.499	0.313	Inch
7872	CRW1	NBR	0.781	1.624	0.313	Inch
7889	CRW1	ACM	0.781	1.828	0.250	Inch
8009	HM3	NBR	0.813	1.063	0.125	Inch
8017	CRW1	NBR	0.813	1.250	0.188	Inch
8053	CRW1	FKM	0.813	1.375	0.375	Inch
8060	CRW1	NBR	0.813	1.375	0.375	Inch
8088	CRW1	NBR	0.813	1.499	0.250	Inch
8178	CRW1	FKM	0.813	1.624	0.250	Inch
8213	CRSHA1	NBR	0.781	1.752	0.313	Inch
8215	CRW1	NBR	0.813	1.752	0.375	Inch
8485	CRSA1	NBR	0.844	1.828	0.313	Inch
8619	HM14	FKM	0.875	1.125	0.125	Inch
8620	HM14	NBR	0.875	1.125	0.125	Inch
8621	CRW1	FKM	0.875	1.250	0.250	Inch
8624	CRW1	NBR	0.875	1.250	0.188	Inch
8625	HM14	NBR	0.875	1.246	0.188	Inch
8627	HM14	NBR	0.875	1.251	0.188	Inch
8631	HM3	NBR	0.875	1.251	0.188	Inch
8632	HM14	NBR	0.875	1.255	0.188	Inch
8634	CRWA5	FKM	0.875	1.250	0.250	Inch
8637	HM14	NBR	0.875	1.308	0.250	Inch
8645	HM14	NBR	0.875	1.312	0.250	Inch
8646	CRW1	FKM	0.875	1.375	0.250	Inch
8648	CRW1	NBR	0.875	1.375	0.250	Inch
8649	CRW1	FKM	0.875	1.308	0.250	Inch
8660	CRWA5	NBR	0.875	1.375	0.250	Inch
8665	CRWA5	FKM	0.875	1.375	0.250	Inch
8677	HM14	NBR	0.875	1.375	0.188	Inch
8690	HM14	NBR	0.875	1.437	0.250	Inch
8691	CRW1	NBR	0.875	1.437	0.250	Inch
8694	CRWA5	FKM	0.875	1.497	0.313	Inch
8700	CRW1	NBR	0.875	1.499	0.250	Inch
8702	CRWA1	NBR	0.875	1.499	0.250	Inch
8703	CRW1	NBR	0.875	1.499	0.313	Inch
8704	CRW1	FKM	0.875	1.499	0.250	Inch
8707	CRWA1	FKM	0.875	1.499	0.250	Inch
8741	HM21	NBR	0.875	1.499	0.250	Inch
8748	CRWA1	NBR	0.875	1.502	0.313	Inch
8761	HM14	NBR	0.875	1.562	0.250	Inch
8763	CRW1	NBR	0.875	1.575	0.250	Inch
8772	HM14	NBR	0.875	1.575	0.250	Inch
8782	CRWA1	NBR	0.875	1.624	0.250	Inch
8795	CRW1	FKM	0.875	1.624	0.250	Inch
8796	CRW1	NBR	0.875	1.624	0.250	Inch
8802	HM8	NBR	0.875	1.624	0.188	Inch
8821	CRW1	NBR	0.875	1.752	0.250	Inch
8842	CRW1	NBR	0.875	1.828	0.250	Inch
8860	CRW1	NBR	0.875	1.874	0.250	Inch
8870	CRW1	NBR	0.875	2.000	0.250	Inch
8871	CRWH1	FKM	0.875	2.050	0.375	Inch
9000	CRWHA1	NBR	0.882	2.088	0.313	Inch
9243	HM14	NBR	0.938	1.375	0.250	Inch
9244	CRWA1	NBR	0.938	1.375	0.250	Inch
9298	HM14	NBR	0.938	1.499	0.250	Inch
9303	CRW1	NBR	0.938	1.500	0.250	Inch
9304	CRW1	FKM	0.938	1.500	0.250	Inch
9307	CRW1	NBR	0.938	1.624	0.250	Inch
9308	CRW1	FKM	0.938	1.624	0.250	Inch
9347	CRW1	NBR	0.938	1.752	0.250	Inch
9354	HM14	NBR	0.938	1.734	0.250	Inch
9409	CRW1	NBR	0.938	1.828	0.250	Inch
9515	CRS1	NBR	0.945	1.575	0.315	Inch
9520	CRW1	ACM	0.950	1.358	0.275	Inch
9604	CRWA1	ACM	0.969	1.406	0.250	Inch

Numerical designation	Design	Material	Inner diameter	Outer diameter	Width	Metric or inch value
9611	CRW1	FKM	0.969	1.499	0.313	Inch
9613	CRW1	NBR	0.969	1.499	0.313	Inch
9646	CRW1	NBR	0.969	1.624	0.250	Inch
9647	CRW1	FKM	0.969	1.624	0.250	Inch
9663	CRWA1	NBR	0.969	1.686	0.313	Inch
9664	CRW1	NBR	0.969	1.686	0.313	Inch
9667	CRW1	NBR	0.969	1.752	0.250	Inch
9681	CRW1	NBR	0.969	1.828	0.313	Inch
9686	CRW1	FKM	0.984	1.499	0.250	Inch
9688	CRS1	NBR	0.969	2.048	0.375	Inch
9700	CRWA5	NBR	0.984	1.596	0.250	Inch
9803	CRWA1	FKM	0.984	1.749	0.375	Inch
9805	CRWA5	FKM	0.984	1.752	0.313	Inch
9814	CRWA5	NBR	1.000	1.375	0.250	Inch
9815	HM14	NBR	1.000	1.250	0.125	Inch
9818	HM14	NBR	1.000	1.312	0.125	Inch
9820	HM14	NBR	1.000	1.375	0.188	Inch
9822	CRW1	NBR	1.000	1.367	0.313	Inch
9826	CRW1	ACM	1.000	1.375	0.250	Inch
9831	CRW1	FKM	1.000	1.375	0.250	Inch
9833	CRW1	FKM	1.000	1.437	0.250	Inch
9835	HM14	NBR	1.000	1.437	0.250	Inch
9837	CRW1	NBR	1.000	1.437	0.250	Inch
9838	CRWA1	NBR	1.000	1.437	0.250	Inch
9843	CRWA5	NBR	1.000	1.499	0.250	Inch
9847	CRWA1	FKM	1.000	1.437	0.250	Inch
9850	CRW1	NBR	1.000	1.496	0.390	Inch
9852	CRW1	NBR	1.000	1.499	0.250	Inch
9853	HM21	NBR	1.000	1.510	0.219	Inch
9854	CRW1	FKM	1.000	1.499	0.250	Inch
9855	CRW5	NBR	1.000	1.499	0.250	Inch
9858	CRWA5	FKM	1.000	1.499	0.250	Inch
9859	HM14	NBR	1.000	1.499	0.188	Inch
9862	CRWA1	FKM	1.000	1.499	0.315	Inch
9863	CRWA5	NBR	1.000	1.500	0.250	Inch
9876	CRW1	NBR	1.000	1.499	0.250	Inch
9878	CRWA1	NBR	1.000	1.499	0.250	Inch
9879	CRWA1	FKM	1.000	1.499	0.250	Inch
9888	CRW1	FKM	0.981	1.376	0.313	Inch
9894	CRW1	NBR	1.000	1.561	0.250	Inch
9900	HM14	NBR	1.000	1.561	0.250	Inch
9903	HM14	NBR	1.000	1.575	0.250	Inch
9907	CRWA1	NBR	1.000	1.575	0.313	Inch
9932	HM14	NBR	1.000	1.624	0.250	Inch
9934	CRW1	NBR	1.000	1.624	0.250	Inch
9935	CRWA1	NBR	1.000	1.624	0.250	Inch
9937	CRW1	FKM	1.000	1.624	0.250	Inch
9939	CRWA1	FKM	1.000	1.624	0.250	Inch
9960	CRW1	NBR	1.000	1.686	0.250	Inch
9967	CRWA5	NBR	1.000	1.752	0.313	Inch
9982	CRW1	FKM	1.000	1.752	0.250	Inch
9983	CRWA1	FKM	1.000	1.752	0.250	Inch
9995	HM21	NBR	1.000	1.752	0.250	Inch
9997	CRW1	NBR	1.000	1.752	0.250	Inch
9998	CRWA1	NBR	1.000	1.752	0.250	Inch
10034	HM14	NBR	1.000	1.781	0.469	Inch
10035	HM18	NBR	1.781	0.469	0.265	Inch
10047	CRW1	ACM	1.000	1.828	0.250	Inch
10049	CRW1	NBR	1.000	1.828	0.250	Inch
10050	CRWA1	NBR	1.000	1.828	0.250	Inch
10058	CRW1	FKM	1.000	1.828	0.250	Inch
10071	CRW1	NBR	1.000	1.851	0.250	Inch
10074	HM14	NBR	1.781	1.851	0.250	Inch
10075	CRW1	NBR	1.000	1.874	0.250	Inch
10104	CRW1	NBR	1.000	1.938	0.250	Inch
10111	CRWA1	FKM	1.000	1.983	0.250	Inch
10112	HM14	NBR	1.781	1.938	0.250	Inch
10114	CRWA1	NBR	1.000	1.983	0.313	Inch
10123	CRW1	NBR	1.000	2.000	0.250	Inch
10124	CRWA1	NBR	1.000	2.000	0.250	Inch
10127	CRWA1	NBR	1.000	2.000	0.250	Inch
10128	CRW1	FKM	1.000	2.000	0.250	Inch
10129	CRWA1	FKM	1.000	2.000	0.250	Inch
10131	CRWA5	NBR	1.000	2.000	0.313	Inch
10152	HM21	NBR	1.781	2.000	0.250	Inch
10157	CRWA1	NBR	1.000	2.047	0.250	Inch
10158	CRW1	NBR	1.000	2.062	0.250	Inch
10169	CRW1	NBR	1.000	2.250	0.250	Inch
10185	HM14	NBR	1.781	2.250	0.250	Inch
10515	CRW1	NBR	1.063	1.499	0.250	Inch
10518	CRW1	FKM	1.063	1.499	0.250	Inch
10581	CRW1	NBR	1.063	1.561	0.250	Inch
10583	CRW1	NBR	1.063	1.577	0.250	Inch
10598	CRW1	NBR	1.063	1.624	0.250	Inch
10632	CRW1	NBR	1.063	1.686	0.250	Inch
10653	CRW1	NBR	1.063	1.752	0.250	Inch
10681	CRW1	NBR	1.063	1.828	0.250	Inch
10700	CRW1	NBR	1.063	1.874	0.250	Inch
10728	CRW1	NBR	1.063	1.979	0.250	Inch
10733	CRW1	NBR	1.063	1.983	0.250	Inch
10740	CRW1	NBR	1.063	2.000	0.250	Inch
10766	CRW1	NBR	1.063	2.062	0.250	Inch
11050	HM14	NBR	1.125	1.375	0.125	Inch
11052	HM14	FKM	1.125	1.375	0.125	Inch
11055	HM14	NBR	1.125	1.438	0.203	Inch
11060	HM14	NBR	1.125	1.499	0.188	Inch
11061	CRW1	NBR	1.125	1.499	0.188	Inch
11065	HM8	NBR	1.125	1.562	0.188	Inch
11066	CRW1	ACM	1.125	1.561	0.250	Inch
11067	CRW1	NBR	1.125	1.561	0.250	Inch
11071	CRW1	FKM	1.125	1.561	0.250	Inch
11081	HM14	NBR	1.125	1.562	0.250	Inch
11082	CRW1	NBR	1.125	1.565	0.250	Inch
11086	CRWA1	NBR	1.126	1.575	0.236	Inch
11096	HM14	NBR	1.250	1.625	0.188	Inch
11111	CRW1	ACM	1.125	1.624	0.250	Inch
11123	CRW1	NBR	1.125	1.624	0.250	Inch
11124	CRWA1	NBR	1.125	1.624	0.250	Inch
11130	HM21	NBR	1.125	1.624	0.250	Inch
11133	CRW1	FKM	1.125	1.624	0.250	Inch
11134	CRWA1	FKM	1.125	1.624	0.250	Inch
11138	CRW1	NBR	1.125	1.752	0.250	Inch
11139	CRWA5	FKM	1.125	1.626	0.250	Inch
11144	CRW1	FKM	1.125	1.752	0.250	Inch
11150	HM14	NBR	1.125	1.750	0.250	Inch
11161	HM21	NBR	1.125	1.781	0.250	Inch
11164	HM18	NBR	1.781	0.469	0.265	Inch
11170	CRW1	NBR	1.125	1.828	0.250	Inch
11171	CRWA1	NBR	1.125	1.828	0.250	Inch
11172	CRW1	FKM	1.125	1.828	0.250	Inch
11175	CRWA1	FKM	1.125	1.828	0.250	Inch
11191	HM21	NBR	1.781	1.828	0.250	Inch
11197	CRWH1	NBR	1.125	1.852	0.313	Inch
11200	CRWHA1	NBR	1.125	1.852	0.313	Inch
11218	CRWA1	FKM	1.125	1.874	0.250	Inch
11223	CRWA1	NBR	1.125	1.874	0.250	Inch
11224	CRW1	NBR	1.125	1.874	0.250	Inch
11225	CRW1	FKM	1.125	1.874	0.250	Inch
11269	HM14	NBR	1.938	0.343	0.352	Inch
11299	CRW1	NBR	1.125	1.983	0.250	Inch
11334	HM21	NBR	1.938	2.000	0.250	Inch
11340	CRW1	NBR	1.125	2.000	0.250	Inch
11343	CRWA1	NBR	1.125	2.000	0.375	Inch
11344	CRW1	FKM	1.125	2.000	0.250	Inch
11352	HM21	NBR	1.938	2.047	0.250	Inch
11353	CRWA1	NBR	1.125	2.047	0.313	Inch
11366	CRW1	NBR	1.125	2.062	0.313	Inch
11368	CRWA1	FKM	1.125	2.062	0.250	Inch
11372	CRW1	NBR	1.125	2.125	0.313	Inch
11378	CRW1	NBR	1.125	2.250	0.250	Inch
11392	CRW1	NBR	1.125	2.441	0.250	Inch
11405	CRSA1	NBR	1.125	2.835	0.375	Inch
11410	CRSH1	NBR	1.125	2.875	0.469	Inch
11514	CRWA1	NBR	1.156	1.752	0.250	Inch
11518	CRWA1	NBR	1.156	1.686	0.250	Inch
11524	CRW1	NBR	1.156	1.874	0.250	Inch

Numerical designation	Design	Material	Inner diameter	Outer diameter	Width	Metric or inch value
11536	CRWA1	NBR	1.156	1.875	0.375	Inch
11544	CRW1	NBR	1.156	2.000	0.250	Inch
11545	CRWA1	NBR	1.156	2.000	0.250	Inch
11550	CRW1	FKM	1.156	2.000	0.250	Inch
11553	CRW1	NBR	1.175	2.031	0.500	Inch
11558	CRW1	NBR	1.156	2.062	0.313	Inch
11566	CRSH1	NBR	1.156	2.125	0.438	Inch
11585	CRW1	NBR	1.188	1.875	0.375	Inch
11650	CRW1	MVQ	1.178	2.073	0.335	Inch
11710	CRW1	FKM	1.188	1.561	0.313	Inch
11728	CRW1	ACM	1.188	1.686	0.250	Inch
11730	CRW1	NBR	1.188	1.687	0.250	Inch
11734	CRW1	NBR	1.188	1.752	0.250	Inch
11736	CRW1	FKM	1.188	1.752	0.250	Inch
11740	CRW1	NBR	1.188	1.828	0.375	Inch
11763	CRW1	ACM	1.188	1.875	0.250	Inch
11776	CRW1	NBR	1.188	1.983	0.250	Inch
11777	CRWA1	NBR	1.188	1.983	0.250	Inch
11800	CRW1	NBR	1.188	2.000	0.250	Inch
11801	CRWA1	NBR	1.188	2.000	0.250	Inch
11806	CRW1	FKM	1.188	2.000	0.250	Inch
11836	HM1	NBR	1.188	2.000	0.250	Inch
11846	HM1	NBR	1.190	1.996	0.250	Inch
11878	CRW1	NBR	1.188	2.062	0.250	Inch
11879	CRW1	ACM	1.188	2.062	0.250	Inch
11907	CRW1	NBR	1.188	2.125	0.313	Inch
11908	CRWHA1	NBR	1.190	2.125	0.313	Inch
11911	CRW1	NBR	1.188	2.165	0.250	Inch
11914	CRW1	NBR	1.188	2.250	0.250	Inch
11923	CRW1	NBR	1.188	2.437	0.250	Inch
11930	CRW1	NBR	1.188	2.441	0.250	Inch
12131	CRSH1	NBR	1.219	2.000	0.438	Inch
12325	HM14	NBR	1.250	1.624	0.250	Inch
12329	CRW1	NBR	1.250	1.625	0.188	Inch
12330	HM14	NBR	1.250	1.500	0.125	Inch
12333	CRWA5	NBR	1.250	1.687	0.313	Inch
12334	HM14	NBR	1.250	1.686	0.188	Inch
12335	CRW1	FKM	1.250	1.687	0.250	Inch
12336	CRW1	NBR	1.250	1.687	0.250	Inch
12337	CRWA1	FKM	1.250	1.687	0.250	Inch
12339	CRWA5	FKM	1.250	1.750	0.250	Inch
12340	CRW1	FKM	1.250	1.752	0.250	Inch
12343	CRWA1	FKM	1.250	1.752	0.250	Inch
12350	CRWA1	NBR	1.250	1.687	0.313	Inch
12360	CRWA5	NBR	1.250	1.750	0.250	Inch
12361	HM21	NBR	1.250	1.752	0.188	Inch
12363	CRW1	NBR	1.250	1.752	0.250	Inch
12364	CRWA1	NBR	1.250	1.752	0.250	Inch
12369	HM21	NBR	1.250	1.752	0.250	Inch
12375	HM8	NBR	1.250	1.828	0.188	Inch
12379	HM21	NBR	1.250	1.874	0.250	Inch
12382	CRW1	ACM	1.250	1.874	0.250	Inch
12383	CRWA1	FKM	1.250	1.874	0.250	Inch
12384	CRW1	NBR	1.250	1.874	0.250	Inch
12386	CRWA1	NBR	1.250	1.874	0.250	Inch
12391	CRW1	NBR	1.250	1.938	0.250	Inch
12396	CRWA1	NBR	1.250	1.955	0.250	Inch
12398	HM14	NBR	1.250	1.968	0.438	Inch
12399	HM18	NBR	1.968	0.469	0.254	Inch
12407	HM21	NBR	1.968	1.979	0.250	Inch
12411	HM18	NBR	1.979	0.406	0.200	Inch
12427	CRW1	NBR	1.250	1.983	0.250	Inch
12428	CRWA1	NBR	1.250	1.983	0.250	Inch
12432	CRW1	FKM	1.250	1.983	0.250	Inch
12437	HM21	NBR	1.979	1.983	0.250	Inch
12438	CRWA5	FKM	1.250	1.997	0.438	Inch
12445	CRW1	FKM	1.250	2.000	0.250	Inch
12446	CRWA1	FKM	1.250	2.000	0.250	Inch
12456	CRW1	NBR	1.250	2.000	0.250	Inch
12458	CRWA1	NBR	1.250	2.000	0.250	Inch
12481	HM21	NBR	1.979	2.000	0.250	Inch
12483	CRW1	ACM	1.250	2.000	0.438	Inch
12506	HMA22	NBR	1.979	1.980	0.406	Inch
12508	HM21	NBR	1.979	2.062	0.250	Inch
12530	CRWH1	NBR	1.250	2.062	0.438	Inch
12531	CRWA1	FKM	1.250	2.062	0.250	Inch
12533	CRWHA1	FKM	1.250	2.062	0.433	Inch
12544	CRW1	FKM	1.250	2.125	0.250	Inch
12545	CRW1	NBR	1.250	2.125	0.250	Inch
12551	CRWA1	NBR	1.250	2.125	0.250	Inch
12565	HM21	NBR	1.979	2.125	0.250	Inch
12577	CRW1	NBR	1.250	2.250	0.250	Inch
12582	HM14	NBR	1.979	2.250	0.250	Inch
12590	CRW1	NBR	1.234	2.250	0.250	Inch
12609	CRWA5	NBR	1.250	2.328	0.500	Inch
12610	CRW1	NBR	1.250	2.327	0.500	Inch
12611	HM18	NBR	2.328	0.500	0.286	Inch
12612	CRW1	FKM	1.250	2.374	0.315	Inch
12613	CRW1	NBR	1.250	2.374	0.313	Inch
12614	CRWA1	NBR	1.250	2.374	0.313	Inch
12621	CRW1	NBR	1.250	2.437	0.250	Inch
12631	CRW1	NBR	1.250	2.441	0.250	Inch
12637	CRW1	NBR	1.250	2.502	0.313	Inch
12638	CRW1	FKM	1.250	2.500	0.310	Inch
12640	CRWA5	NBR	1.250	2.502	0.500	Inch
12655	CRSH1	NBR	1.250	2.561	0.500	Inch
12660	CRSH1	NBR	1.250	2.713	0.469	Inch
12678	CRSH1	NBR	1.250	3.156	0.500	Inch
12905	CRSA1	ACM	1.301	2.000	0.438	Inch
12907	CRWA1	NBR	1.301	2.046	0.492	Inch
13021	CRW1	ACM	1.313	1.828	0.375	Inch
13027	CRSA1	NBR	1.313	1.874	0.375	Inch
13037	CRSA1	NBR	1.313	2.000	0.313	Inch
13050	CRW1	NBR	1.313	2.062	0.313	Inch
13052	CRWA1	NBR	1.313	2.062	0.313	Inch
13054	CRW1	FKM	1.313	2.062	0.313	Inch
13084	CRSA1	NBR	1.313	2.106	0.375	Inch
13092	CRW1	NBR	1.313	2.125	0.313	Inch
13112	CRW1	NBR	1.313	2.250	0.313	Inch
13157	CRWA1	NBR	1.313	2.282	0.250	Inch
13275	CRSH1	NBR	1.313	2.996	0.500	Inch
13350	CRW1	NBR	1.328	2.061	0.313	Inch
13415	CRW1	NBR	1.328	2.031	0.313	Inch
13418	CRW1	NBR	1.328	2.227	0.313	Inch
13419	CRS1	NBR	1.328	2.312	0.433	Inch
13421	CRW1	NBR	1.344	2.106	0.313	Inch
13437	CRW1	NBR	1.344	2.125	0.313	Inch
13500	CRS1	ACM	1.362	2.191	0.250	Inch
13509	HM14	FKM	1.375	1.750	0.197	Inch
13510	CRWA1	FKM	1.375	1.828	0.250	Inch
13511	CRW1	FKM	1.375	1.873	0.313	Inch
13512	CRW1	ACM	1.375	1.874	0.250	Inch
13514	CRW1	NBR	1.375	1.750	0.250	Inch
13527	CRWA1	ACM	1.375	1.955	0.433	Inch
13529	HM14	NBR	1.375	1.750	0.197	Inch
13533	HM8	NBR	1.375	1.834	0.188	Inch
13534	CRW1	NBR	1.375	1.874	0.250	Inch
13535	CRWA1	NBR	1.375	1.874	0.313	Inch
13536	CRW1	NBR	1.375	1.835	0.250	Inch
13537	CRW1	NBR	1.375	1.828	0.313	Inch
13538	CRW1	FKM	1.375	1.874	0.250	Inch
13543	HM14	NBR	1.375	1.874	0.188	Inch
13545	HM14	ACM	1.375	1.874	0.250	Inch
13548	HM14	NBR	1.375	1.874	0.250	Inch
13552	CRWA1	NBR	1.375	1.938	0.250	Inch
13556	HM14	NBR	1.375	1.938	0.250	Inch
13557	CRW1	ACM	1.375	1.983	0.313	Inch
13562	CRWA1	ACM	1.375	2.000	0.313	Inch
13568	CRW1	NBR	1.375	2.000	0.313	Inch
13569	CRWA1	NBR	1.375	2.000	0.313	Inch
13571	CRWH1	NBR	1.375	2.000	0.313	Inch
13573	HM21	NBR	1.375	2.000	0.250	Inch
13579	CRW1	FKM	1.375	2.000	0.313	Inch
13581	CRWA1	FKM	1.375	2.000	0.313	Inch
13582	CRW1	FKM	1.375	2.062	0.313	Inch
13585	CRW1	NBR	1.375	2.062	0.313	Inch

Numerical designation	Design	Material	Inner diameter	Outer diameter	Width	Metric or inch value
13588	CRWA1	ACM	1.375	2.062	0.313	Inch
13598	CRW1	NBR	1.365	2.081	0.313	Inch
13602	CRWA1	NBR	1.375	2.106	0.313	Inch
13612	HM21	NBR	1.375	2.106	0.250	Inch
13614	CRW1	ACM	1.375	2.106	0.313	Inch
13649	CRW1	NBR	1.375	2.125	0.313	Inch
13651	CRWA1	NBR	1.375	2.125	0.313	Inch
13661	CRWA1	FKM	1.375	2.125	0.313	Inch
13662	HM21	NBR	1.375	2.125	0.250	Inch
13663	CRW1	FKM	1.375	2.125	0.313	Inch
13671	CRW1	NBR	1.375	2.250	0.313	Inch
13676	CRWA1	NBR	1.375	2.250	0.313	Inch
13688	CRW1	FKM	1.375	2.250	0.313	Inch
13689	HM14	NBR	1.375	2.250	0.250	Inch
13691	CRWA1	FKM	1.375	2.250	0.313	Inch
13698	CRWA1	NBR	1.375	2.250	0.250	Inch
13700	CRW1	NBR	1.365	2.261	0.313	Inch
13710	HM14	NBR	1.375	2.282	0.250	Inch
13711	HM18	NBR	2.328	0.406	0.188	Inch
13734	CRW1	FKM	1.375	2.374	0.313	Inch
13738	CRW1	NBR	1.375	2.374	0.313	Inch
13739	CRWA1	NBR	1.375	2.374	0.313	Inch
13758	HM21	NBR	2.328	2.374	0.250	Inch
13796	HM21	NBR	2.328	2.437	0.250	Inch
13797	CRW1	NBR	1.375	2.437	0.250	Inch
13810	CRW1	NBR	1.375	2.441	0.313	Inch
13812	CRWA1	NBR	1.375	2.441	0.313	Inch
13862	HM21	NBR	2.328	2.502	0.250	Inch
13865	CRW1	NBR	1.375	2.502	0.313	Inch
13867	CRW1	FKM	1.375	2.502	0.313	Inch
13869	CRW1	ACM	1.375	2.250	0.313	Inch
13875	CRW1	NBR	1.375	2.562	0.375	Inch
13876	CRWA1	NBR	1.375	2.562	0.375	Inch
13878	CRWA1	FKM	1.375	2.562	0.375	Inch
13882	CRWA1	FKM	1.375	2.623	0.313	Inch
13892	CRW1	NBR	1.375	2.686	0.500	Inch
13900	CRW1	NBR	1.375	2.716	0.313	Inch
13906	CRSH1	NBR	1.375	2.750	0.500	Inch
13912	CRWHA1	NBR	1.375	2.812	0.375	Inch
13916	TL8	NBR	2.328	2.835	0.594	Inch
13918	CRWA1	NBR	1.375	2.835	0.313	Inch
13920	CRW1	NBR	1.375	2.835	0.313	Inch
13925	CRWA1	ACM	1.375	2.835	0.313	Inch
13926	CRWA1	FKM	1.378	2.835	0.313	Inch
13929	CRWA1	ACM	1.375	2.875	0.313	Inch
13934	CRSH1	NBR	1.375	3.350	0.469	Inch
13936	CRSH1	NBR	1.375	3.125	0.500	Inch
13937	CRSHA1	NBR	1.375	3.000	0.500	Inch
13985	CRW1	NBR	1.365	1.956	0.438	Inch
13990	CRSA1	NBR	1.399	2.292	0.500	Inch
13992	CRSA1	NBR	1.399	2.292	0.469	Inch
14035	CRSHA1	NBR	1.414	2.250	0.250	Inch
14092	CRW1	NBR	1.417	2.616	0.313	Inch
14209	HM4	NBR	1.438	2.000	0.125	Inch
14212	CRW1	FKM	1.438	2.062	0.313	Inch
14214	CRWA1	NBR	1.438	2.062	0.313	Inch
14223	CRW1	NBR	1.438	2.125	0.313	Inch
14225	CRWA1	FKM	1.438	2.125	0.313	Inch
14247	CRWA1	NBR	1.438	2.250	0.313	Inch
14257	HM14	NBR	1.438	2.250	0.250	Inch
14259	CRWA1	FKM	1.438	2.250	0.313	Inch
14260	CRW1	FKM	1.438	2.250	0.313	Inch
14262	CRW1	NBR	1.438	2.250	0.313	Inch
14282	CRW1	NBR	1.438	2.374	0.313	Inch
14285	CRWA1	NBR	1.438	2.374	0.313	Inch
14359	HM21	NBR	1.438	2.437	0.250	Inch
14363	CRW1	NBR	1.438	2.437	0.313	Inch
14383	CRW1	NBR	1.438	2.502	0.313	Inch
14404	CRW1	NBR	1.438	2.623	0.313	Inch
14423	CRW1	NBR	1.438	2.686	0.313	Inch
14458	CRW1	NBR	1.438	2.750	0.313	Inch
14600	HMA11	NBR	1.457	2.047	0.328	Inch
14641	CRSA1	NBR	1.469	2.374	0.375	Inch
14780	CRSA1	NBR	1.491	2.191	0.250	Inch
14789	CRW1	NBR	1.494	2.060	0.270	Inch
14804	HM14	NBR	1.500	1.874	0.188	Inch
14807	CRW1	NBR	1.500	1.874	0.250	Inch
14808	HM14	FKM	1.500	1.874	0.188	Inch
14809	CRW1	FKM	1.500	1.918	0.250	Inch
14810	HM14	NBR	1.500	1.874	0.250	Inch
14816	HM14	NBR	1.500	1.938	0.250	Inch
14821	CRW1	FKM	1.500	1.983	0.250	Inch
14824	CRWA1	NBR	1.500	1.983	0.250	Inch
14832	CRW1	NBR	1.500	1.983	0.313	Inch
14840	HM14	NBR	1.500	1.983	0.188	Inch
14844	CRWA5	FKM	1.500	1.997	0.250	Inch
14846	CRWA1	NBR	1.500	2.000	0.313	Inch
14848	HMA22	NBR	1.500	1.989	0.250	Inch
14855	CRW1	NBR	1.500	2.000	0.313	Inch
14857	HM14	NBR	1.500	2.000	0.250	Inch
14858	CRWA1	NBR	1.500	2.048	0.313	Inch
14861	CRW1	FKM	1.500	2.000	0.313	Inch
14864	CRW1	NBR	1.500	2.062	0.313	Inch
14867	CRW1	FKM	1.500	2.062	0.313	Inch
14868	CRWA5	FKM	1.500	2.064	0.375	Inch
14869	HM8	NBR	1.500	2.000	0.188	Inch
14875	CRW1	NBR	1.500	2.125	0.313	Inch
14876	CRWA1	NBR	1.500	2.125	0.313	Inch
14886	CRW1	FKM	1.500	2.125	0.313	Inch
14887	CRWA1	FKM	1.500	2.125	0.313	Inch
14896	X1	Leather	1.500	2.187	0.500	Inch
14903	CRW1	NBR	1.500	2.222	0.313	Inch
14907	CRW1	NBR	1.484	2.254	0.313	Inch
14935	CRW1	MVQ	1.500	2.250	0.313	Inch
14938	CRW1	NBR	1.500	2.250	0.313	Inch
14939	CRWA1	NBR	1.500	2.250	0.313	Inch
14940	CRW1	FKM	1.500	2.250	0.313	Inch
14942	CRWA1	FKM	1.500	2.250	0.313	Inch
14960	HM21	NBR	1.500	2.250	0.250	Inch
14966	HM21	NBR	1.500	2.254	0.250	Inch
14968	CRW1	NBR	1.500	2.260	0.406	Inch
14970	X15	NBR	1.500	2.286	0.270	Inch
14971	XH15	NBR	1.500	2.286	0.420	Inch
14974	HM18	NBR	2.328	0.500	0.286	Inch
14975	HM18	NBR	2.328	0.390	0.188	Inch
14977	CRWA5	NBR	1.500	2.328	0.500	Inch
14979	CRWA5	FKM	1.500	2.311	0.500	Inch
14992	CRW1	FKM	1.500	2.374	0.313	Inch
14994	CRWA1	FKM	1.500	2.374	0.313	Inch
15004	CRW1	NBR	1.500	2.374	0.313	Inch
15005	CRWA1	NBR	1.500	2.374	0.313	Inch
15032	HM21	NBR	2.328	2.374	0.250	Inch
15039	CRWH1	NBR	1.500	2.374	0.500	Inch
15041	CRWA1	NBR	1.500	2.377	0.453	Inch
15076	CRW1	NBR	1.500	2.437	0.313	Inch
15080	HM14	NBR	2.328	2.437	0.250	Inch
15092	CRW1	NBR	1.500	2.441	0.313	Inch
15093	CRWA1	NBR	1.500	2.441	0.313	Inch
15097	CRW1	FKM	1.500	2.441	0.313	Inch
15138	CRW1	FKM	1.500	2.502	0.313	Inch
15141	CRW1	NBR	1.500	2.502	0.313	Inch
15142	CRWA1	NBR	1.500	2.502	0.313	Inch
15160	HM21	NBR	2.328	2.502	0.250	Inch
15174	X13	NBR	1.500	2.462	0.290	Inch
15176	CRW1	NBR	1.500	2.561	0.313	Inch
15190	HM21	NBR	2.328	2.623	0.250	Inch
15194	CRW1	NBR	1.500	2.623	0.313	Inch
15204	CRW1	NBR	1.500	2.716	0.438	Inch
15207	CRW1	NBR	1.500	2.686	0.500	Inch
15209	HM21	NBR	2.328	2.716	0.250	Inch
15214	CRW1	NBR	1.500	2.750	0.313	Inch
15230	CRW1	NBR	1.500	2.758	0.313	Inch
15234	CRW1	NBR	1.500	2.835	0.313	Inch
15235	CRW1	NBR	1.500	2.875	0.313	Inch
15240	CRSH1	NBR	1.500	2.996	0.500	Inch
15241	CRSA1	NBR	1.500	3.000	0.375	Inch

Numerical designation	Design	Material	Inner diameter	Outer diameter	Width	Metric or inch value
15343	CRSH1	NBR	1.524	2.374	0.500	Inch
15450	CRWA1	NBR	1.552	2.502	0.500	Inch
15460	CRW1	NBR	1.552	2.686	0.500	Inch
15462	CRWHA1	ACM	1.552	2.750	0.500	Inch
15506	CRW1	FKM	1.563	2.062	0.250	Inch
15508	CRW1	NBR	1.563	2.062	0.250	Inch
15510	CRW1	NBR	1.578	2.082	0.250	Inch
15517	CRW1	NBR	1.563	2.125	0.313	Inch
15518	CRWA1	ACM	1.563	2.125	0.313	Inch
15522	CRW1	NBR	1.563	2.250	0.313	Inch
15530	X4	NBR	1.563	2.237	0.290	Inch
15532	HM14	NBR	1.563	2.250	0.250	Inch
15540	CRW1	ACM	1.563	2.374	0.313	Inch
15542	CRW1	NBR	1.563	2.374	0.313	Inch
15543	CRWA1	NBR	1.563	2.374	0.313	Inch
15544	HM21	NBR	1.563	2.374	0.250	Inch
15549	CRWA1	FKM	1.563	2.374	0.313	Inch
15557	CRWHA1	NBR	1.578	2.408	0.313	Inch
15592	CRW1	NBR	1.563	2.437	0.313	Inch
15620	CRWA1	NBR	1.563	2.441	0.500	Inch
15624	CRWA1	ACM	1.563	2.465	0.374	Inch
15635	CRWA1	NBR	1.563	2.502	0.313	Inch
15649	HM21	NBR	1.563	2.502	0.250	Inch
15655	CRW1	NBR	1.563	2.502	0.313	Inch
15656	CRW1	FKM	1.563	2.502	0.313	Inch
15660	X15	NBR	1.563	2.531	0.285	Inch
15677	CRW1	NBR	1.563	2.561	0.313	Inch
15699	CRW1	NBR	1.563	2.623	0.313	Inch
15702	X	NBR	1.563	2.684	0.438	Inch
15707	CRW1	NBR	1.563	2.686	0.313	Inch
15719	HM21	NBR	1.563	2.687	0.250	Inch
15748	CRSH1	NBR	1.563	2.716	0.469	Inch
15761	CRWH1	NBR	1.563	2.750	0.500	Inch
15773	CRW1	NBR	1.563	2.875	0.313	Inch
15779	CRWA1	ACM	1.563	2.875	0.313	Inch
15915	CRW1	ACM	1.594	2.125	0.313	Inch
15940	CRW1	ACM	1.594	2.437	0.313	Inch
15955	CRW1	NBR	1.594	2.437	0.313	Inch
15960	CRW1	NBR	1.594	2.502	0.313	Inch
15968	CRW1	NBR	1.594	2.623	0.313	Inch
15975	CRW1	NBR	1.594	2.758	0.313	Inch
16039	CRW1	FKM	1.625	2.000	0.250	Inch
16046	CRW1	NBR	1.625	2.000	0.250	Inch
16047	CRWA1	NBR	1.625	2.116	0.313	Inch
16048	CRW1	FKM	1.625	2.125	0.250	Inch
16049	CRW1	ACM	1.625	2.250	0.375	Inch
16054	CRW1	NBR	1.625	2.125	0.250	Inch
16055	HM14	NBR	1.625	2.125	0.250	Inch
16061	CRW1	NBR	1.625	2.250	0.313	Inch
16062	CRWA1	NBR	1.625	2.248	0.313	Inch
16064	TL7	NBR	2.328	2.328	0.438	Inch
16065	HM21	NBR	1.625	2.250	0.250	Inch
16069	HM18	NBR	2.328	0.438	0.235	Inch
16072	CRWH1	NBR	1.625	2.374	0.313	Inch
16077	CRW1	FKM	1.625	2.374	0.313	Inch
16078	CRW1	FKM	1.625	2.250	0.313	Inch
16079	CRWH1	NBR	1.625	2.374	0.500	Inch
16083	CRW1	NBR	1.625	2.282	0.313	Inch
16084	CRW1	NBR	1.625	2.374	0.313	Inch
16085	CRWA1	NBR	1.625	2.374	0.313	Inch
16091	CRWA1	ACM	1.625	2.374	0.313	Inch
16092	HM21	NBR	2.328	2.374	0.250	Inch
16094	CRW1	NBR	1.625	2.374	0.250	Inch
16095	HM14	NBR	2.328	2.375	0.250	Inch
16113	CRW1	NBR	1.625	2.437	0.313	Inch
16119	CRW1	FKM	1.625	2.437	0.313	Inch
16120	CRWA1	FKM	1.625	2.437	0.313	Inch
16121	CRSHA1	NBR	1.625	2.437	0.469	Inch
16128	CRWA1	NBR	1.625	2.437	0.313	Inch
16168	HM21	NBR	2.328	2.437	0.250	Inch
16180	CRW1	NBR	1.625	2.441	0.313	Inch
16201	CRWA1	NBR	1.625	2.441	0.313	Inch
16243	CRWA1	FKM	1.625	2.502	0.313	Inch
16245	CRW1	NBR	1.625	2.502	0.313	Inch
16246	CRWA1	NBR	1.625	2.502	0.313	Inch
16247	CRWA1	ACM	1.625	2.502	0.313	Inch
16254	CRWHA1	NBR	1.625	2.502	0.375	Inch
16257	CRWHA1	FKM	1.625	2.502	0.374	Inch
16270	HM21	NBR	2.328	2.502	0.250	Inch
16285	HM21	NBR	2.328	2.562	0.250	Inch
16286	X15	NBR	1.625	2.462	0.250	Inch
16289	HM18	NBR	2.562	0.438	0.210	Inch
16290	CRWA1	FKM	1.625	2.562	0.313	Inch
16314	CRW1	NBR	1.625	2.623	0.313	Inch
16315	CRWA1	NBR	1.625	2.623	0.313	Inch
16316	CRW1	FKM	1.625	2.623	0.313	Inch
16322	HM21	NBR	2.562	2.623	0.250	Inch
16337	CRW1	NBR	1.625	2.686	0.313	Inch
16338	CRW1	FKM	1.625	2.686	0.313	Inch
16362	HM21	NBR	2.562	2.750	0.250	Inch
16364	CRW1	NBR	1.625	2.750	0.250	Inch
16368	CRWH1	NBR	1.625	2.750	0.313	Inch
16384	HM14	NBR	2.562	2.781	0.313	Inch
16386	CRSH1	NBR	1.625	2.835	0.469	Inch
16404	CRSA1	NBR	1.618	2.575	0.500	Inch
16406	CRW1	NBR	1.625	2.875	0.313	Inch
16422	CRWH1	NBR	1.625	3.000	0.313	Inch
16430	HM3	NBR	1.609	1.906	0.250	Inch
16431	CRSH1	NBR	1.625	3.062	0.500	Inch
16440	CRSH1	NBR	1.625	3.251	0.500	Inch
16449	CRWA1	NBR	1.618	2.531	0.438	Inch
16500	CRWA1	ACM	1.645	2.656	0.313	Inch
16520	HM11	NBR	1.660	2.440	0.594	Inch
16532	CRSH1	NBR	1.656	2.502	0.500	Inch
16545	CRWA1	ACM	1.656	2.623	0.375	Inch
16650	CRWH1	NBR	1.688	2.279	0.500	Inch
16657	CRWA1	NBR	1.688	2.328	0.313	Inch
16667	HM18	NBR	1.688	2.328	0.500	Inch
16669	CRSA1	NBR	1.688	2.374	0.313	Inch
16679	CRW1	NBR	1.688	2.437	0.313	Inch
16680	CRWA1	NBR	1.688	2.437	0.313	Inch
16692	CRW1	MVQ	1.688	2.437	0.250	Inch
16696	CRW1	MVQ	1.688	2.437	0.469	Inch
16719	CRW1	NBR	1.688	2.502	0.313	Inch
16743	HM21	NBR	1.688	2.502	0.281	Inch
16754	HM21	NBR	1.688	2.562	0.250	Inch
16814	CRWA1	NBR	1.688	2.623	0.313	Inch
16816	CRW1	NBR	1.688	2.623	0.500	Inch
16817	CRWA1	FKM	1.688	2.623	0.500	Inch
16818	X4	NBR	1.688	2.650	0.290	Inch
16842	CRW1	NBR	1.688	2.686	0.313	Inch
16854	CRW1	NBR	1.688	2.716	0.313	Inch
16900	CRW1	NBR	1.688	2.750	0.313	Inch
16903	CRWA1	NBR	1.688	2.750	0.375	Inch
16904	HDDF	Steel	42,88	70,10		Metric
16960	CRSA1	NBR	1.688	2.835	0.469	Inch
16999	CRW1	NBR	1.688	2.875	0.313	Inch
17035	CRW1	NBR	1.688	3.061	0.375	Inch
17038	CRWA1	NBR	1.688	3.125	0.375	Inch
17053	CRS1	NBR	1.705	3.084	0.500	Inch
17100	CRWA1	NBR	1.704	3.034	0.500	Inch
17136	CRSH1	NBR	1.719	2.623	0.500	Inch
17144	CRWA1	NBR	1.719	2.561	0.315	Inch
17231	CRW1	NBR	1.750	2.250	0.313	Inch
17234	CRW1	FKM	1.750	2.250	0.313	Inch
17240	HM14	NBR	1.750	2.250	0.188	Inch
17257	CRS1	NBR	1.750	2.328	0.438	Inch
17261	CRWA1	FKM	1.750	2.374	0.313	Inch
17270	CRW1	NBR	1.750	2.374	0.313	Inch
17271	CRWA1	NBR	1.750	2.374	0.313	Inch
17277	HM21	NBR	1.750	2.374	0.250	Inch
17280	CRW1	ACM	1.750	2.411	0.375	Inch
17283	CRW1	NBR	1.750	2.437	0.313	Inch
17284	CRW1	NBR	1.750	2.437	0.313	Inch
17285	CRWA1	NBR	1.750	2.437	0.313	Inch
17292	CRW1	FKM	1.750	2.437	0.313	Inch

Numerical designation	Design	Material	Inner diameter	Outer diameter	Width	Metric or inch value
17293	CRWA1	FKM	1.750	2.437	0.313	Inch
17310	HM21	NBR	1.750	2.437	0.250	Inch
17315	CRW1	NBR	1.750	2.441	0.313	Inch
17320	CRWA1	FKM	1.750	2.441	0.375	Inch
17340	HM21	NBR	1.750	2.441	0.250	Inch
17341	HM21	NBR	1.750	2.441	0.250	Inch
17359	HM18	NBR	2.441	0.469	0.254	Inch
17374	CRWA5	NBR	1.750	2.502	0.500	Inch
17379	CRW1	FKM	1.750	2.502	0.313	Inch
17381	CRWA1	FKM	1.750	2.502	0.313	Inch
17386	CRW1	NBR	1.750	2.502	0.313	Inch
17387	CRWA1	NBR	1.750	2.502	0.313	Inch
17392	HM21	NBR	2.441	2.502	0.250	Inch
17395	CRWHA1	FKM	1.750	2.502	0.375	Inch
17404	CRW1	NBR	1.750	2.561	0.313	Inch
17406	HM18	NBR	2.562	0.500	0.286	Inch
17413	CRWA1	NBR	1.750	2.565	0.313	Inch
17415	HM21	NBR	2.441	2.561	0.250	Inch
17442	CRW1	NBR	1.750	2.623	0.313	Inch
17443	CRWA1	NBR	1.750	2.623	0.313	Inch
17444	CRW1	MVQ	1.750	2.623	0.313	Inch
17448	CRWA1	FKM	1.750	2.623	0.313	Inch
17456	CRWH1	NBR	1.750	2.623	0.375	Inch
17461	HM21	NBR	2.562	2.623	0.250	Inch
17484	CRW1	NBR	1.750	2.686	0.313	Inch
17485	X4	NBR	1.750	2.718	0.294	Inch
17488	HM21	NBR	2.562	2.716	0.250	Inch
17523	CRWA1	NBR	1.750	2.750	0.313	Inch
17544	HM21	NBR	2.718	2.750	0.250	Inch
17557	CRW1	NBR	1.750	2.750	0.313	Inch
17558	CRW1	FKM	1.750	2.750	0.313	Inch
17605	CRW1	NBR	1.750	2.758	0.313	Inch
17607	CRWA1	NBR	1.750	2.717	0.438	Inch
17617	HM18	NBR	2.718	0.359	0.160	Inch
17618	TL7	NBR	2.718	2.718	0.359	Inch
17620	X15	NBR	1.750	2.786	0.294	Inch
17624	CRWA1	NBR	1.750	2.810	0.313	Inch
17627	CRWA1	FKM	1.750	2.810	0.313	Inch
17633	HM21	NBR	2.718	2.830	0.375	Inch
17645	CRWHA1	NBR	1.750	2.875	0.375	Inch
17653	CRW1	NBR	1.750	2.875	0.313	Inch
17657	CRW1	FKM	1.750	2.875	0.313	Inch
17671	HM21	NBR	2.718	2.875	0.250	Inch
17674	TL7	NBR	2.718	2.875	0.500	Inch
17675	CRWHA1	NBR	1.750	2.981	0.438	Inch
17678	CRWHA1	NBR	1.750	2.997	0.313	Inch
17695	CRW1	NBR	1.750	2.997	0.313	Inch
17699	CRWA1	NBR	1.750	3.000	0.313	Inch
17702	HM21	NBR	1.750	3.000	0.250	Inch
17707	CRW1	NBR	1.750	3.000	0.313	Inch
17709	CRW1	FKM	1.750	3.000	0.313	Inch
17716	CRW1	NBR	1.750	3.061	0.313	Inch
17718	CRWA1	NBR	1.750	3.061	0.375	Inch
17724	TL6	NBR	1.750	3.149	0.290	Inch
17726	CRS1	NBR	1.750	3.154	0.313	Inch
17746	CRW1	NBR	1.750	3.189	0.313	Inch
17756	CRW1	NBR	1.750	3.543	0.438	Inch
17761	CRW1	NBR	1.750	3.625	0.438	Inch
17771	CRSA1	NBR	1.750	3.937	0.313	Inch
17780	CRWHA1	FKM	1.768	2.363	0.313	Inch
17802	HM14	NBR	1.781	2.126	0.250	Inch
17806	CRWA1	NBR	1.781	2.252	0.313	Inch
17810	CRWH1	NBR	1.781	2.502	0.313	Inch
17811	CRWH1	FKM	1.781	2.502	0.313	Inch
17821	CRW1	NBR	1.781	2.623	0.313	Inch
17832	CRW1	NBR	1.781	2.686	0.313	Inch
17847	CRSH1	NBR	1.781	2.750	0.500	Inch
17851	CRSH1	NBR	1.781	2.758	0.500	Inch
17949	CRWA1	FKM	1.812	2.623	0.374	Inch
17955	HMA8	NBR	1.811	2.697	0.295	Inch
18025	CRW1	NBR	1.813	2.279	0.313	Inch
18030	X15	NBR	1.813	2.408	0.300	Inch
18039	CRW1	NBR	1.813	2.437	0.313	Inch

Numerical designation	Design	Material	Inner diameter	Outer diameter	Width	Metric or inch value
18049	CRWA1	FKM	1.813	2.562	0.313	Inch
18050	HM18	NBR	1.813	2.562	0.438	Inch
18104	CRW1	NBR	1.813	2.623	0.313	Inch
18114	CRWA1	ACM	1.813	2.686	0.313	Inch
18127	TL7	NBR	1.813	2.719	0.270	Inch
18159	CRW1	NBR	1.813	2.750	0.313	Inch
18242	CRW1	NBR	1.813	2.875	0.313	Inch
18258	HM1	NBR	1.813	2.965	0.250	Inch
18259	HDDF	Steel	46,03	76,28		Metric
18264	CRWA1	ACM	1.813	3.000	0.375	Inch
18412	CRSA1	NBR	1.844	2.502	0.375	Inch
18425	CRW1	NBR	1.844	2.623	0.313	Inch
18444	CRW1	ACM	1.844	2.750	0.313	Inch
18446	CRSA1	NBR	1.844	2.750	0.375	Inch
18492	CRWA1	ACM	1.868	2.518	0.315	Inch
18545	CRWA1	NBR	1.875	2.471	0.313	Inch
18546	CRWA1	FKM	1.875	2.562	0.313	Inch
18549	CRW1	NBR	1.875	2.398	0.250	Inch
18555	CRW1	ACM	1.875	2.500	0.313	Inch
18558	HM21	NBR	1.875	2.502	0.250	Inch
18562	CRW1	ACM	1.875	2.562	0.313	Inch
18565	CRW1	NBR	1.875	2.502	0.313	Inch
18580	CRW1	NBR	1.875	2.623	0.313	Inch
18581	CRWA1	NBR	1.875	2.623	0.313	Inch
18582	CRW1	FKM	1.875	2.623	0.313	Inch
18584	CRWA1	FKM	1.875	2.623	0.313	Inch
18591	HM21	NBR	1.875	2.623	0.250	Inch
18592	CRW1	MVQ	1.875	2.623	0.374	Inch
18626	CRW1	NBR	1.875	2.686	0.313	Inch
18630	X13	NBR	1.873	2.716	0.281	Inch
18652	CRW1	FKM	1.875	2.750	0.313	Inch
18657	CRW1	NBR	1.875	2.750	0.313	Inch
18658	CRWA1	NBR	1.875	2.750	0.313	Inch
18659	HM21	NBR	1.875	2.750	0.250	Inch
18666	CRW1	ACM	1.875	2.750	0.313	Inch
18671	CRW1	ACM	1.875	2.758	0.313	Inch
18693	CRWH1	NBR	1.875	2.782	0.438	Inch
18695	CRWHA1	NBR	1.875	2.782	0.438	Inch
18704	HM21	NBR	1.875	2.780	0.250	Inch
18732	CRW1	FKM	1.875	2.875	0.313	Inch
18733	CRW1	NBR	1.875	2.875	0.313	Inch
18734	CRWA1	NBR	1.875	2.875	0.313	Inch
18737	CRWA1	FKM	1.875	2.875	0.313	Inch
18750	HM21	NBR	1.875	2.875	0.250	Inch
18785	CRW1	NBR	1.875	2.997	0.313	Inch
18808	HM14	NBR	1.875	2.997	0.250	Inch
18817	CRW1	NBR	1.875	3.000	0.313	Inch
18818	CRW1	FKM	1.875	3.000	0.313	Inch
18823	HM21	NBR	1.875	3.000	0.250	Inch
18872	CRWA1	NBR	1.875	3.061	0.313	Inch
18879	CRSA1	NBR	1.875	3.125	0.313	Inch
18880	CRWA1	NBR	1.875	3.105	0.500	Inch
18889	HM21	NBR	1.875	3.150	0.250	Inch
18899	CRWH1	NBR	1.875	3.189	0.469	Inch
18916	CRWH1	NBR	1.875	3.371	0.438	Inch
18922	CRWA1	NBR	1.875	3.249	0.484	Inch
18924	CRWA1	NBR	1.875	3.496	0.438	Inch
18926	CRW1	NBR	1.875	3.500	0.438	Inch
18979	CRSA1	ACM	1.890	2.874	0.276	Inch
19000	CRW1	NBR	1.893	2.434	0.250	Inch
19010	CRW1	NBR	1.915	2.533	0.250	Inch
19017	CRWA1	ACM	1.906	2.752	0.375	Inch
19062	CRSA1	ACM	1.906	3.189	0.313	Inch
19210	CRW1	NBR	1.938	2.437	0.250	Inch
19211	CRW1	NBR	1.938	2.563	0.313	Inch
19212	CRW1	NBR	1.938	2.437	0.250	Inch
19213	CRWA5	NBR	1.938	2.675	0.250	Inch
19215	CRW1	NBR	1.938	2.412	0.313	Inch
19219	HM14	NBR	1.938	2.502	0.281	Inch
19220	CRWA1	NBR	1.938	2.502	0.375	Inch
19226	CRW1	NBR	1.938	2.623	0.313	Inch
19227	CRWA1	FKM	1.938	2.623	0.313	Inch
19229	CRWA1	NBR	1.938	2.623	0.313	Inch

Numerical designation	Design	Material	Inner diameter	Outer diameter	Width	Metric or inch value
19234	CRWA1	ACM	1.938	2.686	0.313	Inch
19236	CRW1	NBR	1.938	2.686	0.313	Inch
19237	CRWA1	NBR	1.938	2.686	0.313	Inch
19240	CRW1	MVQ	1.938	2.686	0.375	Inch
19243	CRWA1	FKM	1.938	2.686	0.313	Inch
19244	CRW1	ACM	1.938	2.686	0.300	Inch
19251	TL8	NBR	1.938	2.686	0.594	Inch
19264	CRW1	NBR	1.938	2.750	0.313	Inch
19267	CRW1	FKM	1.938	2.750	0.313	Inch
19273	CRSA1	NBR	1.938	2.762	0.500	Inch
19274	CRSH1	ACM	1.938	2.825	0.500	Inch
19278	CRWA5	NBR	1.938	2.835	0.250	Inch
19300	CRW1	NBR	1.938	2.875	0.313	Inch
19301	CRWA1	NBR	1.938	2.875	0.313	Inch
19304	CRWH1	FKM	1.938	2.875	0.313	Inch
19306	HM21	NBR	1.938	2.875	0.250	Inch
19310	CRWA1	ACM	1.938	2.884	0.313	Inch
19350	CRW1	NBR	1.938	2.997	0.313	Inch
19359	CRW1	NBR	1.938	3.000	0.313	Inch
19360	CRWA1	NBR	1.938	3.000	0.313	Inch
19368	CRWA1	FKM	1.938	3.000	0.313	Inch
19380	CRW1	NBR	1.938	3.061	0.313	Inch
19400	CRW1	NBR	1.938	3.125	0.500	Inch
19407	CRW1	NBR	1.938	3.189	0.313	Inch
19433	CRWA1	FKM	1.938	3.251	0.313	Inch
19434	CRW1	NBR	1.938	3.251	0.313	Inch
19438	CRW1	MVQ	1.938	3.062	0.500	Inch
19445	CRWHA1	NBR	1.938	3.350	0.469	Inch
19449	CRW1	NBR	1.938	3.543	0.313	Inch
19466	CRSH1	NBR	1.938	3.751	0.500	Inch
19510	TL6	NBR	1.945	2.892	0.294	Inch
19607	CRWA1	NBR	1.969	2.623	0.313	Inch
19615	CRSH1	NBR	1.969	2.686	0.500	Inch
19620	CRSH1	ACM	1.969	2.742	0.500	Inch
19628	CRSA1	NBR	1.969	2.638	0.354	Inch
19643	CRSH1	NBR	1.969	2.875	0.469	Inch
19720	X4	NBR	1.991	2.900	0.290	Inch
19733	HM14	NBR	2.000	2.375	0.188	Inch
19737	HM14	NBR	2.000	2.371	0.250	Inch
19745	CRW1	ACM	2.000	2.502	0.313	Inch
19746	HM21	FKM	2.000	2.623	0.250	Inch
19748	HM1	NBR	2.000	2.500	0.250	Inch
19754	HM14	NBR	2.000	2.502	0.250	Inch
19760	CRW1	NBR	2.000	2.623	0.313	Inch
19762	CRWA1	NBR	2.000	2.623	0.313	Inch
19763	HM21	NBR	2.000	2.623	0.250	Inch
19770	HM14	NBR	2.000	2.635	0.234	Inch
19777	CRWA1	FKM	2.000	2.623	0.313	Inch
19778	CRW1	NBR	2.000	2.686	0.375	Inch
19782	CRWA1	FKM	2.000	2.623	0.313	Inch
19783	HM21	NBR	2.000	2.686	0.250	Inch
19785	CRW1	NBR	2.000	2.716	0.375	Inch
19786	CRWA1	NBR	2.000	2.716	0.375	Inch
19807	CRW1	MVQ	2.000	2.746	0.375	Inch
19820	HM14	NBR	2.000	2.752	0.188	Inch
19823	CRW1	FKM	2.000	2.750	0.313	Inch
19831	CRW1	NBR	2.000	2.750	0.313	Inch
19832	CRWA1	NBR	2.000	2.750	0.313	Inch
19834	HM21	NBR	2.000	2.750	0.250	Inch
19839	CRWA1	FKM	2.000	2.750	0.313	Inch
19840	CRW1	FKM	2.000	2.750	0.313	Inch
19844	X15	XNBR	2.000	2.802	0.250	Inch
19848	CRWH1	NBR	2.000	2.835	0.469	Inch
19880	HM21	NBR	2.000	2.875	0.250	Inch
19882	XHM	NBR	2.000	2.875	0.256	Inch
19884	CRW1	FKM	2.000	2.875	0.313	Inch
19886	CRW1	NBR	2.000	2.875	0.313	Inch
19887	CRWA1	NBR	2.000	2.875	0.313	Inch
19896	CRWHA1	NBR	2.000	2.875	0.375	Inch
19900	CRWH1	NBR	2.000	2.875	0.500	Inch
19922	CRWA1	NBR	2.000	2.880	0.375	Inch
19923	CRWA1	ACM	2.000	2.880	0.375	Inch
19938	HM14	NBR	2.965	0.500	0.275	Inch
19940	HM14	NBR	2.000	2.965	0.313	Inch
19965	HM21	NBR	2.965	2.997	0.250	Inch
19969	CRWH1	NBR	2.000	2.997	0.375	Inch
19970	CRWHA1	NBR	2.000	2.997	0.375	Inch
19979	CRWH1	FKM	2.000	2.997	0.375	Inch
19992	CRW1	NBR	2.000	3.000	0.313	Inch
19993	CRWA1	NBR	2.000	3.000	0.313	Inch
19995	CRWA1	FKM	2.000	3.000	0.313	Inch
20002	CRWH1	FKM	2.000	3.000	0.375	Inch
20004	CRWH1	NBR	2.000	3.000	0.375	Inch
20005	CRWHA1	NBR	2.000	3.000	0.375	Inch
20006	HM21	NBR	2.965	3.000	0.250	Inch
20012	CRSA1	ACM	2.008	2.953	0.354	Inch
20016	HMA94	NBR	2.000	2.631	0.272	Inch
20044	HM21	NBR	2.965	3.061	0.250	Inch
20045	CRW1	NBR	2.000	3.061	0.375	Inch
20055	CRWH1	NBR	2.000	3.061	0.500	Inch
20059	CRWHA1	NBR	2.000	3.061	0.500	Inch
20070	CRW1	NBR	2.000	3.125	0.375	Inch
20078	HM14	NBR	2.965	3.148	0.250	Inch
20079	CRW1	NBR	2.000	3.150	0.375	Inch
20098	CRWH1	NBR	2.000	3.189	0.469	Inch
20100	CRWHA1	NBR	2.000	3.189	0.469	Inch
20109	CRWH1	NBR	2.000	3.251	0.438	Inch
20122	CRW1	FKM	2.000	3.371	0.438	Inch
20124	CRWH1	NBR	2.000	3.371	0.438	Inch
20125	CRWHA1	NBR	2.000	3.371	0.438	Inch
20127	CRWH1	FKM	2.000	3.371	0.438	Inch
20140	CRWH1	NBR	2.000	3.543	0.438	Inch
20144	CRWH1	NBR	2.000	3.623	0.438	Inch
20148	HM21	NBR	2.965	3.623	0.250	Inch
20158	CRWH1	NBR	2.000	4.003	0.438	Inch
20420	CRW1	NBR	2.047	2.561	0.315	Inch
20520	CRW1	FKM	2.063	2.561	0.313	Inch
20530	CRWH1	NBR	2.063	2.750	0.313	Inch
20538	CRWH1	NBR	2.063	2.842	0.438	Inch
20554	CRWH1	NBR	2.063	2.875	0.438	Inch
20586	CRWH1	NBR	2.063	2.997	0.438	Inch
20594	CRW1	NBR	2.063	3.000	0.375	Inch
20596	CRWA1	FKM	2.063	3.000	0.375	Inch
20643	CRWH1	NBR	2.063	3.061	0.313	Inch
20659	CRW1	NBR	2.063	3.125	0.375	Inch
20674	TL7	NBR	2.063	3.150	0.266	Inch
20702	CRW1	NBR	2.063	3.189	0.375	Inch
20747	CRWHA1	NBR	2.063	3.251	0.438	Inch
20749	CRWH1	NBR	2.063	3.251	0.438	Inch
20920	HM21	NBR	2.094	2.750	0.250	Inch
20952	HM18	NBR	2.094	2.718	0.359	Inch
21059	HM21	NBR	2.125	2.750	0.250	Inch
21061	CRWA1	NBR	2.125	2.750	0.500	Inch
21063	CRW1	FKM	2.125	2.750	0.375	Inch
21069	CRW1	NBR	2.125	2.763	0.250	Inch
21091	CRW1	FKM	2.125	2.875	0.438	Inch
21098	CRW1	NBR	2.125	2.875	0.438	Inch
21100	CRWA1	NBR	2.125	2.875	0.438	Inch
21101	HM14	NBR	2.125	2.875	0.250	Inch
21103	CRW1	MVQ	2.125	2.875	0.375	Inch
21108	CRWHA1	NBR	2.125	2.875	0.438	Inch
21121	HM14	NBR	2.125	2.891	0.250	Inch
21134	CRWH1	NBR	2.125	2.997	0.438	Inch
21136	CRWHA1	NBR	2.125	2.997	0.438	Inch
21159	HM21	NBR	2.125	3.000	0.250	Inch
21163	CRW1	NBR	2.125	3.000	0.375	Inch
21164	CRWA1	NBR	2.125	3.000	0.375	Inch
21167	CRWHA1	FKM	2.125	3.000	0.313	Inch
21171	CRWH1	FKM	2.125	3.000	0.438	Inch
21172	CRWH1	NBR	2.125	3.000	0.438	Inch
21173	CRWHA1	NBR	2.125	3.000	0.438	Inch
21208	HM21	NBR	2.125	3.061	0.250	Inch
21210	CRW1	NBR	2.125	3.061	0.500	Inch
21211	CRWA1	NBR	2.125	3.061	0.500	Inch
21213	CRWHA1	NBR	2.125	3.061	0.500	Inch
21215	HDDF	Steel	53,98	82,55		Metric

Numerical designation	Design	Material	Inner diameter	Outer diameter	Width	Metric or inch value
21215	CRWH1	FKM	2.125	3.061	0.438	Inch
21234	CRWH1	NBR	2.125	3.125	0.438	Inch
21245	CRWHA1	ACM	2.125	3.125	0.438	Inch
21265	HM21	NBR	2.125	3.189	0.250	Inch
21267	CRWA1	NBR	2.125	3.189	0.375	Inch
21269	CRWA1	FKM	2.125	3.189	0.375	Inch
21270	CRWHA1	MVQ	2.125	3.189	0.469	Inch
21298	X15	NBR	2.125	3.250	0.270	Inch
21302	CRWH1	NBR	2.125	3.251	0.438	Inch
21336	CRWH1	NBR	2.125	3.350	0.438	Inch
21352	CRWA1	NBR	2.125	3.371	0.375	Inch
21353	CRWH1	NBR	2.125	3.371	0.438	Inch
21358	CRWH1	NBR	2.125	3.543	0.438	Inch
21379	CRSA1	ACM	2.125	3.623	0.469	Inch
21538	CRSH1	NBR	2.145	3.188	0.469	Inch
21736	CRWH1	NBR	2.188	2.875	0.438	Inch
21749	CRWH1	NBR	2.188	2.997	0.438	Inch
21759	CRWA1	NBR	2.188	3.000	0.375	Inch
21763	CRWA1	FKM	2.188	3.000	0.375	Inch
21764	CRWH1	NBR	2.188	3.000	0.500	Inch
21787	CRWH1	NBR	2.188	3.061	0.500	Inch
21840	CRWH1	NBR	2.188	3.251	0.438	Inch
21890	CRWH1	NBR	2.188	3.350	0.438	Inch
21910	CRWH1	NBR	2.188	3.371	0.438	Inch
21950	CRSHA1	NBR	2.188	3.623	0.500	Inch
22306	HM14	NBR	2.250	2.625	0.188	Inch
22325	HM21	NBR	2.250	2.875	0.250	Inch
22328	CRWA1	NBR	2.250	2.875	0.313	Inch
22336	CRWH1	NBR	2.250	2.997	0.438	Inch
22340	CRWHA1	NBR	2.250	2.997	0.438	Inch
22347	CRWA1	NBR	2.250	2.891	0.563	Inch
22353	CRW1	NBR	2.250	3.000	0.375	Inch
22354	CRWA1	NBR	2.250	3.000	0.375	Inch
22358	CRWH1	NBR	2.250	3.000	0.438	Inch
22359	CRWHA1	NBR	2.250	3.000	0.438	Inch
22361	CRWA1	FKM	2.250	3.000	0.375	Inch
22363	CRW1	FKM	2.250	3.000	0.375	Inch
22367	CRWH1	FKM	2.250	3.000	0.438	Inch
22368	HM21	NBR	2.250	3.000	0.250	Inch
22382	CRW1	NBR	2.250	3.061	0.375	Inch
22390	CRWH1	NBR	2.250	3.061	0.438	Inch
22391	CRWHA1	NBR	2.250	3.061	0.438	Inch
22392	HM21	NBR	2.250	3.061	0.250	Inch
22394	CRWHA1	MVQ	2.250	3.061	0.438	Inch
22400	CRWA1	NBR	2.250	3.125	0.375	Inch
22405	CRWA1	FKM	2.250	3.125	0.375	Inch
22407	CRWH1	NBR	2.250	3.125	0.500	Inch
22411	HM18	NBR	3.125	0.563	0.214	Inch
22424	CRW1	NBR	2.250	3.189	0.438	Inch
22425	CRWA1	ACM	2.250	3.189	0.438	Inch
22440	CRW1	NBR	2.250	3.251	0.375	Inch
22441	CRWA1	NBR	2.250	3.251	0.375	Inch
22446	CRWH1	NBR	2.250	3.251	0.438	Inch
22448	CRWHA1	NBR	2.250	3.251	0.438	Inch
22449	CRWH1	FKM	2.250	3.251	0.438	Inch
22468	HM21	NBR	3.125	3.251	0.250	Inch
22484	CRW1	ACM	2.250	3.350	0.375	Inch
22492	CRWH1	NBR	2.250	3.350	0.438	Inch
22493	CRWHA1	NBR	2.250	3.350	0.438	Inch
22495	CRWH1	FKM	2.250	3.350	0.438	Inch
22532	CRWHA1	NBR	2.250	3.371	0.438	Inch
22558	CRWH1	NBR	2.250	3.371	0.438	Inch
22561	CRWH1	FKM	2.250	3.371	0.438	Inch
22563	X15	NBR	2.250	3.400	0.294	Inch
22565	HM14	NBR	3.125	3.440	0.250	Inch
22582	CRWHA1	NBR	2.250	3.500	0.438	Inch
22583	CRWH1	NBR	2.250	3.500	0.438	Inch
22590	CRWHA1	FKM	2.250	3.500	0.438	Inch
22610	CRWA1	NBR	2.250	3.565	0.438	Inch
22614	HM14	NBR	2.240	3.189	0.610	Inch
22618	CRWH1	NBR	2.250	3.623	0.438	Inch
22619	CRWHA1	NBR	2.250	3.623	0.438	Inch
22626	CRWH1	NBR	2.250	3.751	0.438	Inch
22644	CRWH1	NBR	2.250	3.876	0.438	Inch
22647	CRWH1	NBR	2.250	4.003	0.438	Inch
22870	HM18	NBR	2.297	3.148	0.359	Inch
23030	CRW1	NBR	2.313	2.997	0.375	Inch
23035	HM14	NBR	2.313	3.000	0.250	Inch
23040	CRWH1	FKM	2.313	3.000	0.438	Inch
23046	CRW1	NBR	2.313	3.061	0.313	Inch
23061	CRW1	NBR	2.313	3.125	0.375	Inch
23063	CRWA1	FKM	2.313	3.125	0.375	Inch
23093	CRWH1	NBR	2.313	3.251	0.438	Inch
23098	HM1	NBR	2.313	3.065	0.281	Inch
23099	CRWHA1	FKM	2.313	3.251	0.438	Inch
23152	CRWH1	NBR	2.313	3.350	0.438	Inch
23167	CRW1	NBR	2.313	3.371	0.438	Inch
23169	CRWHA1	NBR	2.313	3.374	0.438	Inch
23184	CRW1	NBR	2.313	3.500	0.313	Inch
23240	HM21	NBR	2.313	3.500	0.250	Inch
23277	CRW1	NBR	2.313	3.751	0.500	Inch
23300	CRW1	ACM	2.328	3.000	0.395	Inch
23630	HM21	NBR	2.375	2.997	0.250	Inch
23632	CRWH1	NBR	2.375	2.997	0.438	Inch
23640	HM21	NBR	2.375	3.000	0.250	Inch
23641	CRW1	FKM	2.375	3.000	0.375	Inch
23644	CRWH1	NBR	2.375	3.061	0.438	Inch
23645	CRWH1	ACM	2.375	3.061	0.438	Inch
23646	CRW1	NBR	2.375	3.125	0.375	Inch
23652	CRWH1	NBR	2.375	3.125	0.438	Inch
23654	CRWHA1	NBR	2.375	3.125	0.438	Inch
23655	CRWH1	FKM	2.375	3.061	0.438	Inch
23656	CRWHA1	FKM	2.375	3.125	0.438	Inch
23666	CRWH1	NBR	2.375	3.189	0.438	Inch
23678	CRWHA1	FKM	2.375	3.251	0.438	Inch
23685	CRW1	ACM	2.375	3.251	0.453	Inch
23701	CRW1	NBR	2.375	3.350	0.375	Inch
23702	CRWA1	NBR	2.375	3.350	0.375	Inch
23703	CRW1	ACM	2.375	3.350	0.375	Inch
23706	CRW1	MVQ	2.375	3.350	0.375	Inch
23708	CRWH1	NBR	2.375	3.350	0.438	Inch
23710	CRWHA1	NBR	2.375	3.350	0.438	Inch
23725	HM21	NBR	2.375	3.350	0.250	Inch
23742	CRWH1	NBR	2.375	3.371	0.438	Inch
23746	CRWH1	FKM	2.375	3.371	0.438	Inch
23755	CRWH1	NBR	2.375	3.481	0.438	Inch
23756	CRWHA1	NBR	2.375	3.481	0.438	Inch
23770	CRWA1	ACM	2.375	3.500	0.375	Inch
23771	CRWH1	FKM	2.375	3.500	0.375	Inch
23779	CRWH1	NBR	2.375	3.500	0.375	Inch
23782	CRWHA1	NBR	2.375	3.500	0.438	Inch
23808	CRWH1	NBR	2.375	3.543	0.438	Inch
23809	CRWHA1	FKM	2.375	3.543	0.438	Inch
23815	HM21	NBR	2.375	3.543	0.250	Inch
23820	CRW1	NBR	2.375	3.601	0.438	Inch
23839	CRWH1	NBR	2.375	3.623	0.438	Inch
23841	CRWHA1	ACM	2.375	3.623	0.438	Inch
23843	CRWHA1	FKM	2.375	3.623	0.438	Inch
23844	CRWH1	NBR	2.375	3.876	0.438	Inch
24110	CRSA1	ACM	2.432	3.070	0.227	Inch
24255	CRWH1	NBR	2.438	3.125	0.500	Inch
24263	CRWH1	NBR	2.438	3.251	0.438	Inch
24286	CRW1	NBR	2.438	3.350	0.375	Inch
24287	CRWA1	NBR	2.438	3.350	0.375	Inch
24320	CRWH1	NBR	2.438	3.371	0.438	Inch
24340	CRWH1	NBR	2.438	3.481	0.438	Inch
24370	CRWH1	NBR	2.438	3.500	0.438	Inch
24372	CRWH1	FKM	2.438	3.500	0.438	Inch
24445	CRWH1	NBR	2.438	3.543	0.438	Inch
24863	HM14	NBR	2.500	3.000	0.250	Inch
24865	HM1	NBR	2.500	3.000	0.313	Inch
24875	HM21	NBR	2.500	3.125	0.250	Inch
24880	HM21	NBR	2.500	3.150	0.250	Inch
24881	CRWH1	NBR	2.500	3.189	0.438	Inch
24883	CRWH1	FKM	2.500	3.189	0.438	Inch
24889	CRWH1	NBR	2.500	3.245	0.438	Inch

Numerical designation	Design	Material	Inner diameter	Outer diameter	Width	Metric or inch value
24892	CRWA5	NBR	2.500	3.251	0.350	Inch
24897	CRW1	NBR	2.500	3.251	0.375	Inch
24898	CRWA1	NBR	2.500	3.251	0.375	Inch
24899	CRWA1	FKM	2.500	3.251	0.375	Inch
24904	HM21	NBR	2.500	3.251	0.250	Inch
24910	CRWH1	NBR	2.500	3.251	0.438	Inch
24911	CRWHA1	NBR	2.500	3.251	0.438	Inch
24913	CRW1	FKM	2.500	3.251	0.500	Inch
24914	CRWH1	FKM	2.500	3.251	0.438	Inch
24916	CRWHA1	FKM	2.500	3.251	0.438	Inch
24931	CRWH1	NBR	2.500	3.350	0.438	Inch
24932	CRWHA1	NBR	2.500	3.350	0.438	Inch
24934	CRWHA1	NBR	2.500	3.371	0.375	Inch
24936	CRWHA1	FKM	2.500	3.371	0.438	Inch
24949	CRWA1	ACM	2.500	3.428	0.375	Inch
24951	CRWA1	NBR	2.500	3.428	0.375	Inch
24954	CRWH1	NBR	2.500	3.371	0.438	Inch
24971	CRWA1	FKM	2.500	3.500	0.375	Inch
24980	CRW1	NBR	2.500	3.500	0.438	Inch
24982	CRWA1	NBR	2.500	3.500	0.438	Inch
24984	CRWH1	FKM	2.500	3.500	0.438	Inch
24986	CRWH1	NBR	2.500	3.500	0.438	Inch
24988	CRWHA1	NBR	2.500	3.500	0.438	Inch
24989	CRWH1	ACM	2.500	3.500	0.438	Inch
24990	CRWHA1	FKM	2.500	3.500	0.438	Inch
25007	HM21	NBR	2.500	3.500	0.250	Inch
25037	CRWA1	FKM	2.500	3.544	0.433	Inch
25043	CRWH1	NBR	2.500	3.543	0.438	Inch
25065	CRWHA1	ACM	2.500	3.543	0.438	Inch
25071	CRWH1	NBR	2.500	3.623	0.438	Inch
25074	CRW1	NBR	2.500	3.623	0.375	Inch
25075	CRWA1	NBR	2.500	3.623	0.375	Inch
25076	CRWA1	FKM	2.500	3.623	0.375	Inch
25078	X15	NBR	2.496	3.672	0.313	Inch
25082	CRW1	MVQ	2.500	3.502	0.406	Inch
25091	CRWH1	NBR	2.500	3.751	0.438	Inch
25096	HDDF	Steel	63,50	95,56		Metric
25100	CRWH1	NBR	2.500	3.876	0.438	Inch
25102	CRWHA1	ACM	2.500	3.876	0.469	Inch
25108	CRWA1	NBR	2.500	4.003	0.375	Inch
25110	CRWA1	FKM	2.500	4.003	0.375	Inch
25561	CRWHA1	NBR	2.563	3.481	0.500	Inch
25587	CRSHA1	ACM	2.563	3.500	0.500	Inch
25597	CRWH1	NBR	2.563	3.500	0.438	Inch
25641	CRWH1	NBR	2.563	3.623	0.438	Inch
25661	CRWA1	ACM	2.563	3.623	0.469	Inch
25713	CRWH1	NBR	2.563	3.751	0.438	Inch
25714	CRWHA1	NBR	2.563	3.751	0.438	Inch
25725	CRWH1	FKM	2.563	3.751	0.438	Inch
25745	CRWHA1	NBR	2.563	3.873	0.438	Inch
25748	CRWH1	NBR	2.563	3.876	0.438	Inch
25950	CRWH1	ACM	2.607	3.350	0.375	Inch
25970	CRWHA1	ACM	2.598	3.481	0.438	Inch
26110	CRWH1	NBR	2.625	3.251	0.438	Inch
26122	CRW1	FKM	2.625	3.350	0.375	Inch
26123	CRW1	NBR	2.625	3.350	0.375	Inch
26124	CRWA1	NBR	2.625	3.350	0.375	Inch
26128	CRW1	NBR	2.625	3.350	0.438	Inch
26141	CRWHA1	NBR	2.625	3.374	0.438	Inch
26144	HM14	NBR	2.625	3.371	0.250	Inch
26153	CRWHA1	NBR	2.625	3.371	0.438	Inch
26163	CRWH1	NBR	2.625	3.481	0.438	Inch
26177	CRW1	FKM	2.625	3.500	0.375	Inch
26186	CRWA1	NBR	2.625	3.500	0.375	Inch
26189	CRWH1	NBR	2.625	3.500	0.438	Inch
26190	CRWHA1	NBR	2.625	3.500	0.438	Inch
26191	CRWA1	ACM	2.625	3.500	0.438	Inch
26194	CRWH1	NBR	2.625	3.543	0.438	Inch
26204	CRW1	FKM	2.625	3.623	0.375	Inch
26208	CRWH1	FKM	2.625	3.623	0.438	Inch
26209	CRWH1	NBR	2.625	3.623	0.438	Inch
26211	CRWHA1	NBR	2.625	3.623	0.438	Inch
26220	CRWA1	ACM	2.625	3.623	0.375	Inch

Numerical designation	Design	Material	Inner diameter	Outer diameter	Width	Metric or inch value
26237	CRW1	NBR	2.625	3.623	0.375	Inch
26238	CRWA1	NBR	2.625	3.623	0.375	Inch
26260	HM21	NBR	2.625	3.623	0.250	Inch
26284	CRWA1	NBR	2.625	3.751	0.375	Inch
26289	TL4	NBR	2.625	3.751	0.715	Inch
26297	CRWH1	NBR	2.625	3.751	0.438	Inch
26298	CRWHA1	NBR	2.625	3.751	0.438	Inch
26299	CRWHA1	FKM	2.625	3.751	0.438	Inch
26310	TL5	NBR	2.625	3.813	0.415	Inch
26328	CRWH1	NBR	2.625	3.876	0.438	Inch
26346	CRWH1	NBR	2.625	3.936	0.438	Inch
26354	CRWA1	NBR	2.625	4.003	0.375	Inch
26356	CRWH1	NBR	2.625	4.003	0.438	Inch
26359	CRWHA1	NBR	2.625	4.370	0.438	Inch
26368	CRWH1	NBR	2.625	4.438	0.438	Inch
26761	CRWH1	NBR	2.688	3.751	0.438	Inch
26877	CRS1	NBR	2.648	3.812	0.500	Inch
26921	CRWH1	NBR	2.688	3.876	0.438	Inch
26975	CRWH1	NBR	2.688	4.003	0.469	Inch
27210	HM1	NBR	2.750	3.125	0.188	Inch
27225	HM1	NBR	2.750	3.250	0.313	Inch
27251	CRW1	NBR	2.750	3.481	0.438	Inch
27268	CRW1	NBR	2.750	3.500	0.375	Inch
27269	CRWA1	NBR	2.750	3.500	0.375	Inch
27271	HM14	NBR	2.750	3.500	0.250	Inch
27272	CRWA1	FKM	2.750	3.500	0.375	Inch
27280	CRWH1	NBR	2.750	3.500	0.438	Inch
27284	CRWH1	NBR	2.750	3.538	0.438	Inch
27292	CRWH1	ACM	2.750	3.543	0.438	Inch
27293	CRWH1	FKM	2.750	3.543	0.438	Inch
27295	CRWHA1	ACM	2.750	3.543	0.438	Inch
27324	CRWH1	FKM	2.750	3.623	0.438	Inch
27334	CRWH1	NBR	2.750	3.623	0.438	Inch
27361	CRW1	NBR	2.750	3.751	0.438	Inch
27362	CRWA1	NBR	2.750	3.751	0.438	Inch
27365	CRWH1	FKM	2.750	3.751	0.438	Inch
27368	CRWH1	NBR	2.750	3.751	0.438	Inch
27370	CRWHA1	NBR	2.750	3.751	0.438	Inch
27377	CRWA1	ACM	2.750	3.751	0.438	Inch
27394	HM21	NBR	2.750	3.751	0.250	Inch
27426	CRWH1	NBR	2.750	3.765	0.438	Inch
27452	CRWHA1	ACM	2.750	3.876	0.433	Inch
27467	CRWA1	NBR	2.750	3.876	0.438	Inch
27470	CRWH1	NBR	2.750	3.876	0.438	Inch
27471	CRWHA1	NBR	2.750	3.876	0.438	Inch
27525	CRWH1	NBR	2.750	3.936	0.438	Inch
27526	CRWA1	ACM	2.750	3.937	0.438	Inch
27536	HDDF	Steel	69,85	102,36		Metric
27539	CRWA1	FKM	2.750	4.003	0.375	Inch
27541	CRWH1	NBR	2.750	4.003	0.438	Inch
27565	CRWHA1	ACM	2.750	4.003	0.438	Inch
27576	CRS1	ACM	2.750	4.125	0.438	Inch
27577	CRSA1	NBR	2.750	4.125	0.563	Inch
27600	CRWH1	NBR	2.750	4.249	0.438	Inch
27601	CRWHA1	ACM	2.750	4.249	0.438	Inch
27625	CRWHA1	NBR	2.750	4.331	0.500	Inch
28035	CRWH1	NBR	2.813	3.751	0.438	Inch
28116	CRWH1	NBR	2.813	3.876	0.438	Inch
28175	CRWH1	NBR	2.813	4.003	0.438	Inch
28270	CRW1	NBR	2.813	4.249	0.313	Inch
28275	CRWH1	NBR	2.813	4.249	0.438	Inch
28276	CRWH1	ACM	2.813	4.250	0.438	Inch
28425	CRWA1	NBR	2.844	3.939	0.500	Inch
28426	CRWHA1	NBR	2.844	3.939	0.550	Inch
28464	CRWH1	NBR	2.844	4.003	0.438	Inch
28474	CRWH1	FKM	2.844	4.003	0.500	Inch
28646	CRSA1	NBR	2.875	3.434	0.294	Inch
28654	CRWH1	NBR	2.875	3.623	0.438	Inch
28655	CRWHA1	NBR	2.875	3.623	0.438	Inch
28669	CRWA1	NBR	2.875	3.751	0.375	Inch
28670	CRWA1	FKM	2.875	3.751	0.375	Inch
28686	CRWH1	NBR	2.875	3.751	0.438	Inch
28687	CRWHA1	NBR	2.875	3.751	0.438	Inch

Numerical designation	Design	Material	Inner diameter	Outer diameter	Width	Metric or inch value
28697	CRWH1	ACM	2.875	3.751	0.438	Inch
28698	CRWH1	FKM	2.875	3.751	0.438	Inch
28699	CRWHA1	FKM	2.875	3.751	0.438	Inch
28700	HM21	NBR	2.875	3.751	0.250	Inch
28725	HM1	NBR	2.875	3.876	0.188	Inch
28745	CRWH1	NBR	2.875	3.876	0.438	Inch
28746	CRWHA1	NBR	2.875	3.876	0.438	Inch
28748	CRWHA1	FKM	2.875	3.876	0.438	Inch
28751	HM21	NBR	2.875	3.876	0.250	Inch
28760	CRWH1	NBR	2.875	4.003	0.438	Inch
28761	CRWHA1	NBR	2.875	4.003	0.438	Inch
28778	CRWA1	NBR	2.875	4.003	0.375	Inch
28779	CRWA1	FKM	2.875	4.003	0.375	Inch
28800	HM21	NBR	2.875	4.003	0.250	Inch
28817	CRWH1	NBR	2.875	4.125	0.375	Inch
28841	CRWA1	ACM	2.875	4.331	0.438	Inch
28848	CRWH1	NBR	2.750	4.500	0.469	Inch
29105	CRS1	ACM	2.913	3.543	0.394	Inch
29184	CRWH1	NBR	2.938	4.125	0.375	Inch
29218	CRW1	NBR	2.938	3.623	0.375	Inch
29223	CRW1	NBR	2.938	3.751	0.375	Inch
29224	CRWA1	NBR	2.938	3.751	0.375	Inch
29226	CRWA1	FKM	2.938	3.751	0.375	Inch
29262	CRWHA1	FKM	2.938	3.876	0.375	Inch
29263	CRWHA1	NBR	2.938	3.876	0.375	Inch
29273	CRWA1	ACM	2.938	3.937	0.438	Inch
29316	CRWH1	NBR	2.938	4.003	0.438	Inch
29350	CRWA1	ACM	2.938	4.003	0.438	Inch
29383	CRWHA1	FKM	2.938	4.004	0.433	Inch
29385	CRWHA1	NBR	2.938	4.125	0.375	Inch
29393	CRWHA1	NBR	2.938	4.003	0.438	Inch
29465	CRWH1	NBR	2.938	4.501	0.438	Inch
29840	HM1	NBR	3.000	3.500	0.313	Inch
29841	CRW1	FKM	3.000	3.500	0.375	Inch
29850	HM14	NBR	3.000	3.623	0.250	Inch
29852	TL1	NBR	2.953	4.724	0.320	Inch
29863	HM21	NBR	3.000	3.751	0.250	Inch
29865	CRW1	NBR	3.000	3.751	0.375	Inch
29866	CRWA1	NBR	3.000	3.751	0.375	Inch
29867	CRWA1	ACM	3.000	3.751	0.375	Inch
29868	CRW1	FKM	3.000	3.751	0.375	Inch
29870	CRWA1	FKM	3.000	3.751	0.375	Inch
29871	CRWH1	NBR	3.000	3.751	0.438	Inch
29872	CRWHA1	NBR	3.000	3.751	0.438	Inch
29877	CRW1	FKM	3.000	3.876	0.313	Inch
29887	CRWH1	NBR	3.000	3.876	0.438	Inch
29891	CRWH1	FKM	3.000	3.876	0.469	Inch
29900	X2	Leather	3.000	4.000	0.500	Inch
29906	CRW1	NBR	3.000	4.003	0.375	Inch
29907	CRWA1	NBR	3.000	4.003	0.375	Inch
29912	CRWA1	FKM	3.000	4.003	0.375	Inch
29925	CRWHA1	ACM	3.000	4.003	0.438	Inch
29950	CRWH1	ACM	3.000	4.003	0.375	Inch
29951	CRWH1	NBR	3.000	4.003	0.438	Inch
29952	CRWHA1	NBR	3.000	4.003	0.438	Inch
29958	CRWH1	FKM	3.000	4.003	0.438	Inch
29968	HM21	NBR	3.000	4.003	0.250	Inch
30000	CRWH1	NBR	3.000	4.125	0.438	Inch
30003	CRWH1	FKM	3.000	4.125	0.438	Inch
30033	CRWH1	NBR	3.000	4.249	0.438	Inch
30049	HM21	NBR	3.000	4.249	0.250	Inch
30056	CRWHA1	ACM	3.000	4.249	0.438	Inch
30060	CRWH1	NBR	3.000	4.331	0.438	Inch
30070	CRWH1	NBR	3.000	4.376	0.438	Inch
30087	CRWH1	NBR	3.000	4.500	0.438	Inch
30095	CRWHA1	NBR	3.000	4.500	0.438	Inch
30098	CRWH1	FKM	3.000	4.501	0.438	Inch
30108	X12	NBR	3.000	4.525	0.375	Inch
30125	CRWH1	NBR	3.000	4.999	0.438	Inch
30651	HDDF	Steel	77,80	114,30		Metric
31129	HMA1	NBR	3.125	3.751	0.250	Inch
31132	CRW1	FKM	3.125	3.811	0.355	Inch
31135	CRW1	NBR	3.125	3.811	0.355	Inch
31139	CRWA1	NBR	3.125	4.003	0.375	Inch
31144	CRSA1	FKM	3.125	3.936	0.512	Inch
31147	CRWH1	NBR	3.125	4.003	0.438	Inch
31148	CRWHA1	NBR	3.125	4.003	0.438	Inch
31152	CRWHA1	FKM	3.125	4.003	0.375	Inch
31173	CRWHA1	ACM	3.125	4.125	0.438	Inch
31177	CRW1	NBR	3.125	4.125	0.375	Inch
31179	CRWA1	FKM	3.125	4.125	0.375	Inch
31185	CRWHA1	MVQ	3.125	4.125	0.438	Inch
31189	CRWH1	NBR	3.125	4.125	0.438	Inch
31192	HMA1	NBR	3.125	4.125	0.250	Inch
31227	CRWH1	NBR	3.125	4.249	0.438	Inch
31228	CRWHA1	NBR	3.125	4.249	0.438	Inch
31237	CRWHA1	FKM	3.125	4.249	0.438	Inch
31250	CRWH1	NBR	3.125	4.376	0.438	Inch
31261	CRWHA1	ACM	3.125	4.376	0.438	Inch
31269	CRWH1	NBR	3.125	4.501	0.438	Inch
31299	CRWH1	NBR	3.125	4.626	0.438	Inch
31327	CRWH1	NBR	3.125	4.751	0.438	Inch
31333	CRWH1	NBR	3.125	4.999	0.438	Inch
31353	CRWH1	NBR	3.125	5.251	0.438	Inch
31511	CRW1	FKM	3.150	3.946	0.394	Inch
31514	X15	NBR	3.150	3.994	0.591	Inch
31758	CRWH1	NBR	3.188	4.249	0.438	Inch
31825	CRWH1	NBR	3.188	4.376	0.438	Inch
31855	CRWH1	NBR	3.188	4.501	0.438	Inch
31870	CRWH1	NBR	3.188	4.626	0.438	Inch
31955	CRWH1	NBR	3.188	4.999	0.438	Inch
32325	HMA1	NBR	3.250	3.750	0.250	Inch
32330	CRW1	ACM	3.250	3.876	0.375	Inch
32332	CRSA1	FKM	3.250	3.876	0.375	Inch
32344	CRW1	NBR	3.250	4.003	0.375	Inch
32347	CRWA1	ACM	3.250	4.003	0.375	Inch
32362	CRSH1	NBR	3.250	4.125	0.563	Inch
32380	CRWH1	ACM	3.250	4.249	0.438	Inch
32385	CRWHA1	ACM	3.250	4.249	0.438	Inch
32392	CRWA1	FKM	3.250	4.249	0.375	Inch
32393	CRW1	NBR	3.250	4.249	0.375	Inch
32395	CRWA1	NBR	3.250	4.249	0.375	Inch
32396	CRWH1	NBR	3.250	4.249	0.438	Inch
32397	CRWHA1	NBR	3.250	4.249	0.438	Inch
32403	CRWH1	FKM	3.250	4.249	0.438	Inch
32412	HM14	NBR	3.250	4.249	0.250	Inch
32424	CRWH1	NBR	3.250	4.376	0.438	Inch
32437	X4	NBR	3.250	4.468	0.315	Inch
32441	X15	NBR	3.250	4.500	0.313	Inch
32448	CRWA1	ACM	3.250	4.500	0.438	Inch
32477	CRW1	NBR	3.250	4.501	0.375	Inch
32501	CRWH1	NBR	3.250	4.501	0.438	Inch
32502	CRWHA1	NBR	3.250	4.501	0.438	Inch
32510	HM21	NBR	3.250	4.501	0.250	Inch
32514	CRWHA1	NBR	3.250	4.626	0.433	Inch
32540	CRWH1	NBR	3.250	4.626	0.438	Inch
32555	CRWH1	NBR	3.250	4.718	0.438	Inch
32560	CRWH1	NBR	3.250	4.751	0.438	Inch
32582	CRWH1	NBR	3.250	4.999	0.438	Inch
32583	CRWHA1	NBR	3.250	4.999	0.438	Inch
32815	CRSA1	NBR	3.298	4.125	0.563	Inch
33033	CRWH1	NBR	3.313	4.125	0.438	Inch
33073	CRWH1	NBR	3.313	4.249	0.438	Inch
33136	CRWH1	NBR	3.313	4.500	0.438	Inch
33306	CRWH1	NBR	3.313	4.999	0.438	Inch
33645	CRW1	NBR	3.375	4.125	0.375	Inch
33654	CRWA1	MVQ	3.375	4.280	0.406	Inch
33665	CRWHA1	NBR	3.375	4.249	0.438	Inch
33699	CRWA1	FKM	3.375	4.376	0.375	Inch
33700	CRW1	NBR	3.375	4.376	0.375	Inch
33701	CRWA1	NBR	3.375	4.376	0.375	Inch
33711	CRWH1	NBR	3.375	4.376	0.438	Inch
33712	CRWHA1	NBR	3.375	4.376	0.438	Inch
33733	CRWA1	FKM	3.375	4.501	0.438	Inch
33735	CRWH1	NBR	3.375	4.501	0.438	Inch
33772	CRWH1	NBR	3.375	4.626	0.438	Inch

Numerical designation	Design	Material	Inner diameter	Outer diameter	Width	Metric or inch value
33773	CRWHA1	NBR	3.375	4.626	0.438	Inch
33775	CRWHA1	FKM	3.375	4.626	0.438	Inch
33807	CRWH1	NBR	3.375	4.686	0.438	Inch
33837	CRWH1	NBR	3.375	4.999	0.438	Inch
33866	CRWHA1	NBR	3.375	5.251	0.438	Inch
34000	X14	FKM	3.400	4.500	0.281	Inch
34256	CRW1	NBR	3.438	4.249	0.375	Inch
34279	CRWA1	NBR	3.438	4.501	0.375	Inch
34282	CRWH1	NBR	3.438	4.501	0.438	Inch
34283	CRWHA1	NBR	3.438	4.501	0.438	Inch
34336	CRWH1	NBR	3.438	4.626	0.438	Inch
34338	CRWHA1	NBR	3.438	4.626	0.438	Inch
34379	CRWA1	NBR	3.438	4.751	0.438	Inch
34383	CRWH1	NBR	3.438	4.756	0.438	Inch
34398	CRWH1	NBR	3.438	4.876	0.438	Inch
34407	CRWH1	NBR	3.438	4.999	0.438	Inch
34408	CRWHA1	NBR	3.438	4.999	0.438	Inch
34647	CRWA1	FKM	3.375	4.125	0.375	Inch
34700	CRSA1	NBR	3.469	4.626	0.625	Inch
34835	HM1	NBR	3.500	4.000	0.300	Inch
34840	HM14	NBR	3.500	4.003	0.250	Inch
34848	HM14	NBR	3.500	4.125	0.250	Inch
34857	CRWHA1	FKM	3.500	4.249	0.438	Inch
34860	CRW1	NBR	3.500	4.376	0.375	Inch
34861	CRWA1	NBR	3.500	4.376	0.375	Inch
34866	CRWA1	FKM	3.500	4.376	0.375	Inch
34867	CRWH1	NBR	3.500	4.376	0.438	Inch
34868	CRWHA1	NBR	3.500	4.376	0.438	Inch
34869	CRWHA1	FKM	3.500	4.376	0.433	Inch
34883	CRWA1	FKM	3.500	4.501	0.375	Inch
34885	HM12	NBR	3.500	4.450	0.531	Inch
34886	CRW1	NBR	3.500	4.501	0.375	Inch
34887	CRWA1	NBR	3.500	4.501	0.375	Inch
34888	CRWH1	NBR	3.500	4.501	0.438	Inch
34889	CRWHA1	NBR	3.500	4.501	0.438	Inch
34891	CRWHA1	ACM	3.500	4.501	0.438	Inch
34892	CRWH1	FKM	3.500	4.501	0.438	Inch
34967	HM21	NBR	3.500	4.501	0.250	Inch
34985	CRWH1	NBR	3.500	4.626	0.438	Inch
35012	CRWH1	NBR	3.500	4.751	0.438	Inch
35020	CRWHA1	NBR	3.500	4.751	0.438	Inch
35029	CRWH1	NBR	3.500	4.751	0.625	Inch
35039	CRWA1	FKM	3.500	4.751	0.375	Inch
35040	CRWA1	ACM	3.500	4.751	0.375	Inch
35042	HM21	NBR	3.500	4.751	0.250	Inch
35076	HDDF	Steel	88,90	125,81		Metric
35080	CRWA1	FKM	3.500	4.999	0.438	Inch
35082	CRWH1	NBR	3.500	4.999	0.438	Inch
35083	CRWHA1	ACM	3.500	4.999	0.438	Inch
35086	CRWH1	NBR	3.500	5.126	0.438	Inch
35095	CRWHA1	NBR	3.500	5.126	0.438	Inch
35096	CRWH1	NBR	3.500	5.251	0.438	Inch
35111	CRSH1	NBR	3.500	5.751	0.563	Inch
35120	CRSA1	FKM	3.504	4.173	0.354	Inch
35556	CRWH1	NBR	3.563	4.501	0.438	Inch
35593	CRWH1	NBR	3.563	4.626	0.438	Inch
35649	CRWH1	NBR	3.563	4.751	0.438	Inch
35676	CRWH1	NBR	3.563	4.876	0.438	Inch
35716	CRWH1	NBR	3.563	4.999	0.438	Inch
36153	CRWA1	FKM	3.625	4.376	0.375	Inch
36155	CRWA1	NBR	3.625	4.376	0.375	Inch
36157	CRWH1	NBR	3.625	4.376	0.375	Inch
36158	CRWH1	ACM	3.625	4.376	0.375	Inch
36166	CRW1	NBR	3.625	4.501	0.375	Inch
36172	X15	NBR	3.625	4.500	0.294	Inch
36177	CRW1	NBR	3.625	4.626	0.375	Inch
36179	CRWA1	FKM	3.625	4.626	0.375	Inch
36185	CRWH1	NBR	3.625	4.626	0.438	Inch
36186	CRWHA1	NBR	3.625	4.626	0.438	Inch
36220	CRWH1	NBR	3.625	4.751	0.438	Inch
36234	CRWA1	MVQ	3.625	4.751	0.500	Inch
36314	CRWH1	NBR	3.625	4.876	0.438	Inch
36359	CRWA1	FKM	3.625	4.999	0.375	Inch
36361	CRWA1	NBR	3.625	4.999	0.375	Inch
36363	CRWH1	NBR	3.625	4.999	0.438	Inch
36364	CRWHA1	NBR	3.625	4.999	0.438	Inch
36382	CRWA1	NBR	3.625	5.251	0.375	Inch
36391	CRWHA1	NBR	3.625	5.375	0.438	Inch
36740	CRWHA1	NBR	3.688	4.501	0.438	Inch
36770	CRWH1	NBR	3.688	4.751	0.438	Inch
36880	CRWH1	NBR	3.688	4.999	0.438	Inch
36895	CRWA1	NBR	3.688	5.126	0.438	Inch
36910	CRWA1	NBR	3.688	5.626	0.438	Inch
37320	HM14	NBR	3.750	4.376	0.250	Inch
37325	HM14	FKM	3.750	4.376	0.250	Inch
37327	CRW1	NBR	3.750	4.501	0.375	Inch
37328	CRW1	FKM	3.750	4.501	0.375	Inch
37330	CRWHA1	ACM	3.750	4.501	0.469	Inch
37332	CRWHA1	FKM	3.750	4.502	0.469	Inch
37387	CRW1	ACM	3.750	4.751	0.375	Inch
37388	CRW1	NBR	3.750	4.751	0.375	Inch
37389	CRWA1	NBR	3.750	4.751	0.375	Inch
37390	CRWA1	ACM	3.750	4.751	0.438	Inch
37395	CRWHA1	MVQ	3.750	4.751	0.438	Inch
37396	CRWH1	NBR	3.750	4.751	0.438	Inch
37403	CRWHA1	ACM	3.750	4.750	0.438	Inch
37405	CRWH1	FKM	3.750	4.751	0.438	Inch
37433	CRWH1	NBR	3.750	4.876	0.438	Inch
37524	CRW1	FKM	3.750	4.999	0.375	Inch
37525	CRW1	NBR	3.750	4.999	0.375	Inch
37526	CRWA1	NBR	3.750	4.999	0.375	Inch
37532	CRWH1	NBR	3.750	4.999	0.438	Inch
37533	CRWHA1	NBR	3.750	4.999	0.438	Inch
37574	CRWH1	NBR	3.750	5.251	0.438	Inch
37577	CRWH1	FKM	3.750	5.251	0.438	Inch
38160	CRSH1	NBR	3.813	4.999	0.469	Inch
38220	CRSH1	NBR	3.813	5.251	0.469	Inch
38590	X12	NBR	3.875	5.390	0.375	Inch
38646	CRW1	NBR	3.875	4.751	0.375	Inch
38647	CRWA1	NBR	3.875	4.751	0.375	Inch
38649	CRWA1	FKM	3.875	4.751	0.375	Inch
38653	CRWH1	NBR	3.875	4.751	0.438	Inch
38669	CRWH1	NBR	3.875	4.876	0.500	Inch
38673	CRWHA1	NBR	3.875	4.876	0.438	Inch
38678	CRWHA1	FKM	3.875	4.876	0.500	Inch
38691	CRW1	NBR	3.875	4.999	0.375	Inch
38692	CRWA1	NBR	3.875	4.999	0.375	Inch
38694	CRWA1	FKM	3.875	4.999	0.375	Inch
38702	CRWHA1	FKM	3.875	5.126	0.438	Inch
38703	CRWH1	NBR	3.875	5.126	0.438	Inch
38713	CRWHA1	NBR	3.875	5.126	0.438	Inch
38730	CRWH1	NBR	3.875	5.251	0.438	Inch
38731	CRWHA1	NBR	3.875	5.251	0.438	Inch
38739	CRWHA1	ACM	3.875	5.251	0.438	Inch
38740	HDDF	Steel	98,43	134,92		Metric
38745	CRWH1	NBR	3.875	5.376	0.438	Inch
38749	CRSHA1	NBR	3.875	5.501	0.500	Inch
38751	HDDF	Steel	98,43	141,27		Metric
38758	CRWHA1	NBR	3.875	5.626	0.433	Inch
38770	CRSA1	FKM	3.898	4.680	0.370	Inch
38774	CRWH1	NBR	3.875	5.690	0.500	Inch
38810	CRSH1	NBR	3.875	5.751	0.563	Inch
39245	CRWH1	NBR	3.938	4.876	0.438	Inch
39275	CRWH1	NBR	3.938	4.999	0.438	Inch
39276	CRWH1	FKM	3.938	4.999	0.438	Inch
39277	CRWH1	NBR	3.938	4.999	0.438	Inch
39304	CRWHA1	FKM	3.938	5.126	0.472	Inch
39320	CRWH1	NBR	3.938	5.251	0.438	Inch
39350	CRWH1	NBR	3.938	5.375	0.438	Inch
39423	CRWH1	NBR	3.938	5.501	0.438	Inch
39835	HM14	NBR	4.000	4.501	0.250	Inch
39851	CRW1	NBR	4.000	4.876	0.438	Inch
39860	HM21	NBR	4.000	4.876	0.250	Inch
39895	CRW1	ACM	4.000	4.999	0.375	Inch
39921	CRWA1	FKM	4.000	4.999	0.375	Inch
39922	CRW1	NBR	4.000	4.999	0.375	Inch

Numerical designation	Design	Material	Inner diameter	Outer diameter	Width	Metric or inch value
39923	CRWA1	NBR	4.000	4.999	0.375	Inch
39930	CRWHA1	ACM	4.000	4.999	0.438	Inch
39932	CRWH1	FKM	4.000	4.999	0.438	Inch
39933	CRWH1	NBR	4.000	4.999	0.438	Inch
39934	CRWHA1	NBR	4.000	4.999	0.438	Inch
39935	CRWH1	MVQ	4.000	4.999	0.438	Inch
39961	HM21	NBR	4.000	4.999	0.250	Inch
39975	CRWH1	NBR	4.000	5.126	0.438	Inch
39996	CRWH1	FKM	4.000	5.251	0.438	Inch
39997	CRWH1	NBR	4.000	5.251	0.438	Inch
40000	CRWA1	NBR	4.000	5.251	0.438	Inch
40020	CRWHA1	NBR	4.000	5.310	0.500	Inch
40036	CRWH1	NBR	4.000	5.376	0.438	Inch
40049	CRWH1	NBR	4.000	5.501	0.438	Inch
40077	CRWA1	NBR	4.000	5.626	0.375	Inch
40078	CRWH1	NBR	4.000	5.626	0.438	Inch
40108	CRWH1	NBR	4.000	5.751	0.438	Inch
40131	X	NBR	4.000	5.813	0.500	Inch
40138	CRWH1	NBR	4.000	6.001	0.500	Inch
40158	CRWH1	NBR	4.000	6.250	0.500	Inch
41125	CRWH1	NBR	4.125	4.999	0.438	Inch
41126	CRWH1	FKM	4.125	4.999	0.438	Inch
41170	CRWH1	NBR	4.125	5.126	0.438	Inch
41171	CRWH1	FKM	4.125	5.126	0.438	Inch
41185	CRWH1	NBR	4.125	5.251	0.438	Inch
41186	CRWH1	FKM	4.125	5.251	0.438	Inch
41265	CRWH1	NBR	4.125	5.501	0.438	Inch
41287	CRWH1	NBR	4.125	5.751	0.438	Inch
41305	CRWH1	NBR	4.125	6.001	0.438	Inch
41307	CRWH1	FKM	4.125	6.001	0.438	Inch
41751	CRSHA1	NBR	4.188	4.999	0.469	Inch
41761	CRSH1	NBR	4.188	5.251	0.469	Inch
41833	CRSHA1	NBR	4.188	5.751	0.500	Inch
42340	HM14	NBR	4.250	4.813	0.313	Inch
42380	HM21	NBR	4.250	5.126	0.250	Inch
42419	CRWA1	NBR	4.250	5.251	0.375	Inch
42422	CRW1	MVQ	4.250	5.251	0.375	Inch
42426	CRWH1	NBR	4.250	5.251	0.438	Inch
42427	CRWHA1	NBR	4.250	5.251	0.438	Inch
42433	CRWH1	FKM	4.250	5.251	0.438	Inch
42470	HM21	NBR	4.250	5.251	0.250	Inch
42474	CRWA1	FKM	4.250	5.373	0.438	Inch
42475	CRWH1	NBR	4.250	5.376	0.438	Inch
42528	CRWH1	NBR	4.250	5.501	0.438	Inch
42557	CRWA1	NBR	4.250	5.626	0.438	Inch
42573	CRWH1	NBR	4.250	5.751	0.438	Inch
42592	CRWH1	FKM	4.250	5.876	0.500	Inch
42616	CRWH1	NBR	4.250	6.001	0.500	Inch
42635	CRWH1	NBR	4.250	6.126	0.500	Inch
42644	CRWH1	NBR	4.250	6.250	0.500	Inch
43072	CRWHA1	ACM	4.313	5.501	0.433	Inch
43073	CRWHA1	NBR	4.313	5.501	0.438	Inch
43135	HDDF	Steel	109,52	147,90		Metric
43150	HDDF	Steel	109,52	152,40		Metric
43231	CRSH1	NBR	4.313	5.751	0.500	Inch
43345	CRWHA1	FKM	4.331	5.626	0.472	Inch
43650	CRWH1	NBR	4.375	5.376	0.438	Inch
43691	CRWH1	NBR	4.375	5.501	0.438	Inch
43751	CRWH1	NBR	4.375	5.751	0.438	Inch
43771	CRWH1	NBR	4.375	6.001	0.500	Inch
43820	CRWH1	NBR	4.375	6.250	0.500	Inch
44269	X1	ACM	4.375	5.373	0.570	Inch
44275	CRWH1	NBR	4.438	5.501	0.500	Inch
44276	CRWH1	FKM	4.438	5.501	0.500	Inch
44295	CRWH1	NBR	4.438	5.751	0.500	Inch
44320	CRWH1	NBR	4.438	6.001	0.500	Inch
44350	CRWH1	NBR	4.438	6.250	0.500	Inch
44630	CRWH1	NBR	4.477	6.250	0.500	Inch
44892	X12	NBR	4.500	6.015	0.550	Inch
44913	CRWH1	NBR	4.500	5.251	0.438	Inch
44917	CRWHA1	FKM	4.500	5.251	0.438	Inch
44920	CRWH1	NBR	4.500	5.376	0.438	Inch
44926	CRWHA1	FKM	4.500	5.376	0.438	Inch
44959	CRW1	NBR	4.500	5.501	0.375	Inch
44960	CRWA1	NBR	4.500	5.501	0.375	Inch
44967	CRWH1	NBR	4.500	5.501	0.438	Inch
44968	CRWHA1	NBR	4.500	5.501	0.438	Inch
44973	CRWH1	FKM	4.500	5.501	0.438	Inch
44980	CRWH1	FKM	4.500	5.501	0.435	Inch
45025	HM14	NBR	4.500	5.501	0.250	Inch
45032	CRWH1	NBR	4.500	5.626	0.438	Inch
45033	CRWHA1	FKM	4.500	5.626	0.438	Inch
45064	CRWA1	FKM	4.500	5.751	0.375	Inch
45069	CRWH1	NBR	4.500	5.751	0.438	Inch
45070	CRWHA1	NBR	4.500	5.751	0.438	Inch
45110	CRWH1	NBR	4.500	6.001	0.500	Inch
45111	CRWHA1	NBR	4.500	6.001	0.500	Inch
45112	CRWHA1	FKM	4.500	6.001	0.500	Inch
45140	CRWH1	NBR	4.500	6.126	0.563	Inch
45150	CRWH1	NBR	4.500	6.250	0.500	Inch
45161	X12	XNBR	4.500	6.409	0.415	Inch
45550	CRSHA1	NBR	4.563	5.751	0.500	Inch
45560	CRSH1	NBR	4.563	6.250	0.500	Inch
46144	CRWH1	NBR	4.625	5.626	0.500	Inch
46155	CRWH1	FKM	4.625	5.626	0.500	Inch
46200	CRWH1	NBR	4.625	5.751	0.500	Inch
46208	CRWH1	MVQ	4.625	5.751	0.500	Inch
46285	CRWH1	NBR	4.625	6.001	0.500	Inch
46324	CRWH1	NBR	4.625	6.250	0.500	Inch
46770	CRWH1	MVQ	4.688	5.751	0.512	Inch
46800	CRWH1	NBR	4.688	5.751	0.512	Inch
46950	CRWH1	NBR	4.688	6.250	0.500	Inch
46975	HDDF	Steel	119,08	162,56		Metric
47375	CRW1	ACM	4.750	5.749	0.438	Inch
47378	HM14	NBR	4.750	5.375	0.313	Inch
47379	CRW1	FKM	4.750	5.751	0.500	Inch
47382	CRWA1	FKM	4.750	5.751	0.500	Inch
47383	CRW1	NBR	4.750	5.751	0.500	Inch
47394	CRWH1	NBR	4.750	5.751	0.500	Inch
47395	CRWHA1	NBR	4.750	5.751	0.500	Inch
47441	CRWH1	NBR	4.750	5.875	0.500	Inch
47455	X15	NBR	4.750	6.002	0.300	Inch
47474	CRWH1	NBR	4.750	6.001	0.500	Inch
47475	CRWHA1	NBR	4.750	6.001	0.500	Inch
47481	CRW1	FKM	4.750	6.001	0.500	Inch
47583	CRWH1	NBR	4.750	6.250	0.500	Inch
47586	CRWHA1	FKM	4.750	6.250	0.500	Inch
48060	CRWH1	ACM	4.813	5.751	0.563	Inch
48062	CRWH1	FKM	4.813	5.751	0.563	Inch
48065	CRWH1	MVQ	4.813	5.751	0.563	Inch
48650	HM14	NBR	4.875	5.501	0.250	Inch
48692	CRWH1	FKM	4.875	6.001	0.500	Inch
48693	CRWH1	NBR	4.875	6.001	0.500	Inch
48726	CRWH1	NBR	4.875	6.126	0.500	Inch
48768	CRWHA1	NBR	4.875	6.250	0.500	Inch
48769	CRWH1	NBR	4.875	6.250	0.500	Inch
48772	CRWH1	FKM	4.875	6.250	0.500	Inch
49251	CRWH1	NBR	4.938	6.001	0.500	Inch
49274	CRWHA1	FKM	4.921	6.375	0.500	Inch
49301	CRWH1	NBR	4.938	6.250	0.500	Inch
49927	CRWHA1	FKM	5.000	6.001	0.500	Inch
49928	CRWH1	NBR	5.000	6.001	0.500	Inch
49929	CRWHA1	NBR	5.000	6.001	0.500	Inch
49951	HDW1	NBR	5.000	6.125	0.500	Inch
49960	CRW1	FKM	5.000	6.126	0.500	Inch
49966	CRWH1	NBR	5.000	6.250	0.500	Inch
49984	CRW1	NBR	5.000	6.250	0.500	Inch
49985	CRWA1	NBR	5.000	6.250	0.500	Inch
49990	CRWH1	ACM	5.000	6.250	0.500	Inch
49991	CRWH1	FKM	5.000	6.250	0.500	Inch
49998	CRWHA1	NBR	5.000	6.250	0.500	Inch
50070	HM21	NBR	5.000	6.250	0.250	Inch
50130	CRWH1	NBR	5.000	6.375	0.500	Inch
50138	CRWHA1	NBR	5.000	6.375	0.500	Inch
50148	CRWH1	NBR	5.000	6.500	0.500	Inch
50151	CRWH1	FKM	5.000	6.500	0.500	Inch

Numerical designation	Design	Material	Inner diameter	Outer diameter	Width	Metric or inch value
50168	CRWH1	NBR	5.000	6.750	0.500	Inch
50172	CRWHA1	NBR	5.000	6.750	0.500	Inch
50185	CRSHA1	NBR	5.000	7.000	0.500	Inch
50186	HDW1	NBR	5.000	7.125	0.500	Inch
50195	CRSHA1	NBR	5.000	7.500	0.500	Inch
50618	CRWH1	NBR	5.063	6.126	0.500	Inch
50620	HDW1	NBR	5.063	6.125	0.500	Inch
50650	CRWH1	NBR	5.063	6.375	0.500	Inch
50655	HDDF	Steel	128,57	171,45		Metric
51240	CRWHA1	NBR	5.125	6.126	0.500	Inch
51243	CRW1	FKM	5.125	6.126	0.500	Inch
51247	CRW1	NBR	5.125	6.126	0.500	Inch
51248	CRWH1	NBR	5.125	6.375	0.500	Inch
51252	CRWHA1	NBR	5.125	6.250	0.500	Inch
51253	CRWA1	FKM	5.125	6.250	0.500	Inch
51255	CRWH1	FKM	5.125	6.375	0.500	Inch
51276	CRSHA1	NBR	5.125	6.500	0.500	Inch
51277	HDW1	NBR	5.125	6.625	0.500	Inch
51330	HDW1	NBR	5.125	7.000	0.500	Inch
51800	HDW1	NBR	5.188	6.250	0.500	Inch
51852	CRWH1	FKM	5.188	6.501	0.625	Inch
52440	CRW1	NBR	5.250	6.001	0.375	Inch
52443	CRWH1	FKM	5.250	6.001	0.500	Inch
52445	CRWH1	NBR	5.250	6.250	0.500	Inch
52447	CRWH1	FKM	5.250	6.250	0.500	Inch
52475	HM4	NBR	5.250	6.250	0.250	Inch
52488	CRWH1	NBR	5.250	6.500	0.500	Inch
52489	CRWH1	FKM	5.250	6.500	0.500	Inch
52648	CRWH1	NBR	5.250	6.750	0.500	Inch
52649	CRWH1	FKM	5.250	6.750	0.500	Inch
52651	HDW1	NBR	5.250	6.750	0.500	Inch
52655	HDW1	NBR	5.250	7.125	0.500	Inch
53100	HDW1	NBR	5.313	6.375	0.500	Inch
53151	CRSHA1	NBR	5.313	6.500	0.500	Inch
53688	CRSHA1	NBR	5.375	6.374	0.500	Inch
53692	CRSH1	NBR	5.375	6.499	0.563	Inch
53701	CRWH1	NBR	5.375	6.625	0.500	Inch
53702	CRWH1	FKM	5.375	6.625	0.500	Inch
53771	CRWH1	FKM	5.375	6.750	0.500	Inch
53775	CRWH1	NBR	5.375	6.750	0.500	Inch
54000	HDDF	Steel	137,16	177,55		Metric
54300	HDW1	NBR	5.438	6.625	0.500	Inch
54925	CRWA1	NBR	5.500	6.250	0.500	Inch
54931	CRWH1	NBR	5.500	6.500	0.500	Inch
54934	CRWH1	FKM	5.500	6.500	0.500	Inch
54936	CRWH1	ACM	5.500	6.500	0.500	Inch
54949	CRSHA1	NBR	5.500	6.626	0.563	Inch
54959	CRW1	NBR	5.500	6.750	0.500	Inch
54960	CRWA1	NBR	5.500	6.750	0.500	Inch
54971	CRWHA1	NBR	5.500	6.750	0.500	Inch
54972	CRWH1	NBR	5.500	6.750	0.500	Inch
54974	CRWH1	FKM	5.500	6.750	0.500	Inch
55152	X	NBR	5.500	6.780	0.380	Inch
55157	CRSHA1	NBR	5.500	6.876	0.563	Inch
55179	CRSH1	NBR	5.500	7.501	0.563	Inch
56101	CRWH1	NBR	5.625	6.625	0.500	Inch
56102	CRWH1	FKM	5.625	6.625	0.500	Inch
56136	CRWH1	NBR	5.625	6.875	0.500	Inch
56137	CRWH1	FKM	5.625	6.875	0.500	Inch
56160	CRWHA1	NBR	5.625	7.125	0.500	Inch
56170	HDDF	Steel	142,88	184,15		Metric
57502	HMA1	NBR	5.750	6.375	0.250	Inch
57505	CRWH1	NBR	5.750	6.625	0.500	Inch
57506	CRW1	FKM	5.750	6.625	0.500	Inch
57509	CRWHA1	NBR	5.750	6.751	0.500	Inch
57510	CRWH1	NBR	5.750	6.750	0.500	Inch
57519	CRSHA1	NBR	5.750	6.876	0.563	Inch
57521	CRWH1	NBR	5.750	7.000	0.500	Inch
57522	CRWH1	FKM	5.750	6.750	0.500	Inch
57523	CRWH1	FKM	5.750	7.000	0.500	Inch
57531	CRWHA1	NBR	5.750	7.000	0.500	Inch
57571	HMA21	NBR	5.750	7.003	0.250	Inch
57578	CRSHA1	NBR	5.750	7.126	0.563	Inch
57584	CRSHA1	NBR	5.750	7.502	0.563	Inch
58710	HDW1	NBR	5.875	7.000	0.500	Inch
58716	CRWH1	NBR	5.875	7.125	0.500	Inch
58717	CRWH1	FKM	5.875	7.125	0.500	Inch
58741	CRWHA1	NBR	5.875	7.125	0.500	Inch
58760	CRWH1	NBR	5.875	7.500	0.500	Inch
58775	HDDF	Steel	149,23	194,08		Metric
59300	HDW1	NBR	5.938	7.000	0.500	Inch
59999	CRWA1	FKM	6.000	6.750	0.500	Inch
60000	CRW1	FKM	6.000	6.750	0.500	Inch
60006	CRSHA1	NBR	6.000	7.002	0.500	Inch
60009	HDW1	NBR	6.000	7.250	0.500	Inch
60016	CRWA1	NBR	6.000	7.500	0.500	Inch
60026	CRWHA1	FKM	6.000	7.500	0.500	Inch
60028	CRWHA1	NBR	6.000	7.500	0.500	Inch
60075	HM4	NBR	6.000	7.500	0.250	Inch
60620	CRSA1	NBR	6.062	6.772	0.551	Inch
60650	HDW1	NBR	6.063	7.500	0.500	Inch
61210	CRWH1	NBR	6.125	7.125	0.625	Inch
61215	HDW1	NBR	6.125	7.125	0.500	Inch
61230	HDW1	NBR	6.125	7.250	0.500	Inch
61235	HDW1	NBR	6.125	7.375	0.500	Inch
61248	CRSHA1	NBR	6.125	7.502	0.563	Inch
61255	CRWH1	NBR	6.125	7.625	0.625	Inch
61256	CRWH1	ACM	6.125	7.625	0.625	Inch
61740	CRSH1	ACM	6.188	7.500	0.563	Inch
62480	HDW1	NBR	6.250	7.250	0.500	Inch
62482	CRWH1	NBR	6.250	7.252	0.500	Inch
62495	CRWH1	NBR	6.250	7.500	0.500	Inch
62497	CRWH1	FKM	6.250	7.500	0.500	Inch
62530	X	NBR	6.250	7.750	0.350	Inch
62535	CRWH1	NBR	6.250	7.750	0.500	Inch
62572	CRWH1	NBR	6.250	7.875	0.625	Inch
63700	CRWH1	NBR	6.375	7.375	0.625	Inch
63717	HDW1	NBR	6.375	7.500	0.500	Inch
63733	CRWH1	NBR	6.375	7.875	0.625	Inch
63734	CRWHA1	NBR	6.375	7.875	0.563	Inch
63796	HDDF	Steel	161,93	206,25		Metric
64330	HDW1	NBR	6.438	7.500	0.500	Inch
64993	CRWA1	NBR	6.500	7.500	0.500	Inch
64994	CRWH1	NBR	6.500	7.500	0.500	Inch
64998	CRWH1	FKM	6.500	7.500	0.500	Inch
65021	CRW1	NBR	6.500	8.000	0.500	Inch
65037	CRWHA1	NBR	6.500	8.000	0.500	Inch
66217	HDW1	NBR	6.625	7.625	0.500	Inch
66219	HDW1	NBR	6.625	7.750	0.500	Inch
66222	HDW1	NBR	6.625	7.875	0.500	Inch
66230	HDW1	NBR	6.625	8.000	0.500	Inch
66241	CRWH1	NBR	6.625	8.125	0.500	Inch
67510	HDW1	NBR	6.750	7.750	0.500	Inch
67515	CRWH1	NBR	6.750	8.000	0.500	Inch
67533	CRWH1	NBR	6.750	8.250	0.500	Inch
67560	HDDF	Steel	171,45	218,95		Metric
67600	HDW1	NBR	6.750	8.750	0.500	Inch
68730	HDW1	NBR	6.875	8.250	0.500	Inch
68745	CRWH1	NBR	6.875	8.375	0.500	Inch
68760	HDW1	NBR	6.875	8.500	0.500	Inch
70016	CRWH1	NBR	7.000	8.000	0.630	Inch
70028	CRWH1	NBR	7.000	8.250	0.625	Inch
70034	CRSHA1	NBR	7.000	8.375	0.625	Inch
70052	CRWH1	NBR	7.000	8.500	0.625	Inch
70053	CRWHA1	NBR	7.000	8.500	0.625	Inch
70054	CRWHA1	FKM	7.000	8.500	0.625	Inch
70080	CRWA1	NBR	7.000	8.500	0.500	Inch
71220	HDW1	NBR	7.125	8.250	0.500	Inch
71245	CRWH1	NBR	7.125	8.625	0.625	Inch
72515	CRW1	NBR	7.250	8.250	0.625	Inch
72539	CRWHA1	NBR	7.250	8.750	0.625	Inch
72542	CRWH1	ACM	7.250	8.750	0.750	Inch
72570	CRWHA1	NBR	7.250	9.055	0.625	Inch
73720	HDW1	NBR	7.375	8.375	0.500	Inch
73730	HDW1	NBR	7.375	8.500	0.500	Inch
73745	CRWH1	NBR	7.375	8.875	0.625	Inch

Numerical designation	Design	Material	Inner diameter	Outer diameter	Width	Metric or inch value
74310	HDDF	Steel	188,93	238,76		Metric
75030	CRWH1	NBR	7.500	8.500	0.625	Inch
75046	HDW1	NBR	7.500	8.750	0.500	Inch
75050	CRWH1	NBR	7.500	9.000	0.625	Inch
75052	CRWHA1	ACM	7.500	9.000	0.625	Inch
75069	HDW1	NBR	7.500	9.250	0.500	Inch
76215	CRWH1	NBR	7.625	8.625	0.563	Inch
76225	HDW1	NBR	7.625	8.875	0.500	Inch
76255	CRWH1	NBR	7.625	9.125	0.625	Inch
77506	HDW1	NBR	7.750	8.750	0.500	Inch
77540	CRWH1	NBR	7.750	9.250	0.625	Inch
78020	HDDF	Steel	198,12	254,00		Metric
78710	HDW1	NBR	7.875	8.875	0.500	Inch
78725	CRWHA1	NBR	7.875	9.250	1.000	Inch
78738	CRWH1	NBR	7.875	9.375	0.625	Inch
79302	HM14	NBR	7.938	8.750	0.344	Inch
79620	HDW1	NBR	7.938	9.125	0.500	Inch
79960	CRWH1	NBR	8.000	9.000	0.625	Inch
79961	CRWHA1	NBR	8.000	9.000	0.625	Inch
79997	CRWH1	NBR	8.000	9.250	0.625	Inch
79998	CRWHA1	NBR	8.000	9.250	0.625	Inch
80010	CRWH1	NBR	8.000	9.500	0.625	Inch
80038	CRWHA1	NBR	8.000	10.000	0.625	Inch
81245	CRWH1	NBR	8.125	10.125	0.625	Inch
81246	CRWHA1	NBR	8.125	10.125	0.625	Inch
82510	CRWH1	NBR	8.250	9.250	0.625	Inch
82527	CRWH1	NBR	8.250	9.252	0.500	Inch
82540	HDDF	Steel	209,55	255,57		Metric
82560	CRWH1	NBR	8.250	10.250	0.625	Inch
85002	CRWH1	NBR	8.500	9.750	0.625	Inch
85009	CRWH1	NBR	8.500	10.000	0.625	Inch
85015	CRWH1	NBR	8.500	10.500	0.625	Inch
85085	CRWHA1	NBR	8.500	10.625	0.625	Inch
86260	CRWH1	NBR	8.625	10.625	0.625	Inch
86850	HDDF	Steel	220,68	277,14		Metric
87461	LDSLV4	SAE 1008	395,22	400,00	63,50	Metric
87500	LDSLV4	SAE 1008	360,00	365,00	44,00	Metric
87503	LDSLV4	SAE 1008	495,20	500,00	30,00	Metric
87531	LDSLV4	SAE 1008	365,20	370,00	20,00	Metric
87541	CRWH1	NBR	8.750	10.750	0.625	Inch
87783	LDSLV4	SAE 1008	530,00	535,00	20,00	Metric
87820	LDSLV4	SAE 1008	714,81	720,00	50,00	Metric
87901	LDSLV4	SAE 1008	340,00	340,00	18,00	Metric
87911	LDSLV4	SAE 1008	240,21	245,00	44,00	Metric
87916	LDSLV4	SAE 1008	435,20	440,00	63,50	Metric
87921	LDSLV4	SAE 1008	475,18	480,00	20,00	Metric
88710	CRWH1	NBR	8.875	10.125	0.625	Inch
88760	CRWH1	NBR	8.875	10.875	0.625	Inch
89946	LDSLV4	SAE 1008	1100,23	1105,00	63,00	Metric
89947	LDSLV4	SAE 1008	1049,33	1054,00	60,00	Metric
89949	LDSLV4	SAE 1008	735,23	740,00	63,00	Metric
89997	LDSLV4	SAE 1008	595,20	600,00	63,50	Metric
90004	LDSLV4	SAE 1008	645,20	650,00	64,00	Metric
90006	CRWH1	NBR	9.000	10.000	0.625	Inch
90036	CRWH1	NBR	9.000	11.000	0.625	Inch
90042	LDSLV4	SAE 1008	405,23	410,00	50,00	Metric
90075	LDSLV4	SAE 1008	555,20	560,00	63,50	Metric
90103	LDSLV4	SAE 1008	875,18	880,00	63,50	Metric
90149	LDSLV4	SAE 1008	503,25	508,00	24,00	Metric
90155	LDSLV4	SAE 1008	315,19	320,00	63,50	Metric
90198	LDSLV4	SAE 1008	320,00	325,00	63,50	Metric
90221	LDSLV4	SAE 1008	865,23	870,00	63,50	Metric
90238	LDSLV4	SAE 1008	285,22	290,00	63,50	Metric
90239	LDSLV4	SAE 1008	325,22	330,00	63,50	Metric
90259	LDSLV4	SAE 1008	494,44	500,00	24,00	Metric
90292	LDSLV4	SAE 1008	585,22	590,00	55,00	Metric
90347	LDSLV4	SAE 1008	455,00	460,00	30,00	Metric
90437	LDSLV4	SAE 1008	280,00	285,00	45,00	Metric
90546	LDSLV4	SAE 1008	275,00	280,00	22,00	Metric
90777	LDSLV4	SAE 1008	335,22	340,00	39,00	Metric
90778	LDSLV4	SAE 1008	355,20	360,00	25,40	Metric
90785	LDSLV4	SAE 1008	355,20	360,00	50,00	Metric
90786	LDSLV4	SAE 1008	1015,20	1020,00	25,00	Metric
90788	LDSLV4	SAE 1008	360,22	365,00	45,00	Metric
90792	LDSLV4	SAE 1008	335,22	340,00	50,00	Metric
90799	LDSLV4	SAE 1008	665,20	670,00	45,00	Metric
90801	LDSLV4	SAE 1008	340,00	340,00	50,00	Metric
90802	LDSLV4	SAE 1008	535,23	540,00	63,00	Metric
90951	LDSLV4	SAE 1008	575,23	580,00	63,50	Metric
90952	LDSLV4	SAE 1008	235,23	240,00	18,00	Metric
90953	LDSLV4	SAE 1008	685,22	690,00	63,50	Metric
92536	CRWHA1	NBR	9.250	11.250	0.625	Inch
92570	CRWHA1	NBR	9.250	12.750	0.625	Inch
92574	CRWHA1	NBR	9.250	12.750	1.250	Inch
93115	HDDF	Steel	236,52	279,40		Metric
93125	HDDF	Steel	236,52	295,28		Metric
95048	CRW1	NBR	9.500	10.500	0.438	Inch
95052	HM21	NBR	9.500	10.750	0.313	Inch
95062	CRW1	NBR	9.500	11.500	0.625	Inch
95620	HDDF	Steel	242,87	301,22		Metric
96245	CRWH1	NBR	9.625	11.625	0.625	Inch
97542	CRWH1	NBR	9.625	11.125	0.625	Inch
97545	CRWH1	NBR	9.625	11.250	0.625	Inch
97550	CRWH1	NBR	9.625	11.750	0.625	Inch
99048	SKF Speedi-sleeve	Stainless steel	76,20	84,96	20,65	Metric
99049	SKF Speedi-sleeve	Stainless steel	11,99	15,49	8,41	Metric
99050	SKF Speedi-sleeve	Stainless steel	12,70	15,49	8,74	Metric
99052	SKF Speedi-sleeve	Stainless steel	50,01	56,49	16,97	Metric
99053	SKF Speedi-sleeve	Stainless steel	79,38	89,54	18,01	Metric
99055	SKF Speedi-sleeve	Stainless steel	14,00	19,05	9,93	Metric
99056	SKF Speedi-sleeve	Stainless steel	14,30	19,05	9,93	Metric
99058	SKF Speedi-sleeve	Stainless steel	16,00	18,24	11,13	Metric
99059	SKF Speedi-sleeve	Stainless steel	15,01	19,05	8,99	Metric
99060	SKF Speedi-sleeve	Stainless steel	17,37	22,86	11,13	Metric
99062	SKF Speedi-sleeve	Stainless steel	15,88	19,05	10,31	Metric
99068	SKF Speedi-sleeve	Stainless steel	16,99	22,23	11,00	Metric
99076	SKF Speedi-sleeve	Stainless steel	19,05	24,00	11,13	Metric
99078	SKF Speedi-sleeve	Stainless steel	19,99	23,62	11,00	Metric
99080	SKF Speedi-sleeve	Stainless steel	19,84	23,75	11,13	Metric
99081	SKF Speedi-sleeve	Stainless steel	19,30	23,83	11,13	Metric
99082	SKF Speedi-sleeve	Stainless steel	18,01	24,43	11,00	Metric
99083	SKF Speedi-sleeve	Stainless steel	20,65	30,18	14,30	Metric
99084	SKF Speedi-sleeve	Stainless steel	22,00	30,18	9,12	Metric
99085	SKF Speedi-sleeve	Stainless steel	22,00	30,18	11,99	Metric
99086	SKF Speedi-sleeve	Stainless steel	21,82	29,34	9,53	Metric
99087	SKF Speedi-sleeve	Stainless steel	22,23	27,79	11,13	Metric
99091	SKF Speedi-sleeve	Stainless steel	23,11	30,94	11,13	Metric
99092	SKF Speedi-sleeve	Stainless steel	24,00	28,70	11,13	Metric
99094	SKF Speedi-sleeve	Stainless steel	24,61	28,70	11,13	Metric
99096	SKF Speedi-sleeve	Stainless steel	24,61	28,70	18,26	Metric
99098	SKF Speedi-sleeve	Stainless steel	24,99	33,02	11,00	Metric
99103	SKF Speedi-sleeve	Stainless steel	26,01	33,35	11,99	Metric
99106	SKF Speedi-sleeve	Stainless steel	27,00	33,53	11,13	Metric
99108	SKF Speedi-sleeve	Stainless steel	27,66	35,71	11,13	Metric

Numerical designation	Design	Material	Inner diameter	Outer diameter	Width	Metric or inch value
99111	SKF Speedi-sleeve	Stainless steel	27,99	34,93	12,70	Metric
99112	SKF Speedi-sleeve	Stainless steel	28,58	38,10	11,13	Metric
99114	SKF Speedi-sleeve	Stainless steel	30,00	35,56	11,00	Metric
99116	SKF Speedi-sleeve	Stainless steel	28,58	38,10	12,70	Metric
99118	SKF Speedi-sleeve	Stainless steel	30,18	35,56	11,13	Metric
99120	SKF Speedi-sleeve	Stainless steel	29,36	34,29	12,70	Metric
99121	SKF Speedi-sleeve	Stainless steel	32,99	40,49	18,01	Metric
99122	SKF Speedi-sleeve	Stainless steel	29,85	35,56	11,13	Metric
99123	SKF Speedi-sleeve	Stainless steel	30,96	39,70	11,00	Metric
99125	SKF Speedi-sleeve	Stainless steel	31,75	38,10	11,13	Metric
99128	SKF Speedi-sleeve	Stainless steel	32,00	38,10	11,13	Metric
99129	SKF Speedi-sleeve	Stainless steel	33,35	40,64	9,53	Metric
99131	SKF Speedi-sleeve	Stainless steel	33,35	40,49	15,88	Metric
99133	SKF Speedi-sleeve	Stainless steel	34,93	41,61	11,13	Metric
99134	SKF Speedi-sleeve	Stainless steel	34,01	41,28	15,88	Metric
99138	SKF Speedi-sleeve	Stainless steel	34,93	41,61	15,88	Metric
99139	SKF Speedi-sleeve	Stainless steel	34,93	41,61	16,00	Metric
99141	SKF Speedi-sleeve	Stainless steel	31,50	39,12	11,13	Metric
99143	SKF Speedi-sleeve	Stainless steel	36,53	45,24	17,48	Metric
99144	SKF Speedi-sleeve	Stainless steel	36,53	45,24	12,70	Metric
99146	SKF Speedi-sleeve	Stainless steel	35,99	45,24	16,99	Metric
99147	SKF Speedi-sleeve	Stainless steel	38,00	45,24	16,99	Metric
99149	SKF Speedi-sleeve	Stainless steel	38,10	45,24	17,48	Metric
99150	SKF Speedi-sleeve	Stainless steel	38,10	45,24	12,70	Metric
99152	SKF Speedi-sleeve	Stainless steel	38,68	47,22	14,30	Metric
99153	SKF Speedi-sleeve	Stainless steel	40,01	46,99	12,93	Metric
99155	SKF Speedi-sleeve	Stainless steel	39,42	47,22	14,30	Metric
99156	SKF Speedi-sleeve	Stainless steel	39,67	47,22	17,48	Metric
99157	SKF Speedi-sleeve	Stainless steel	40,08	46,99	16,00	Metric
99159	SKF Speedi-sleeve	Stainless steel	39,85	47,22	19,05	Metric
99160	SKF Speedi-sleeve	Stainless steel	40,77	49,23	16,28	Metric
99161	SKF Speedi-sleeve	Stainless steel	41,28	47,63	11,13	Metric
99162	SKF Speedi-sleeve	Stainless steel	41,28	47,63	17,48	Metric
99163	SKF Speedi-sleeve	Stainless steel	41,00	49,23	15,88	Metric
99165	SKF Speedi-sleeve	Stainless steel	42,06	53,01	17,50	Metric
99166	SKF Speedi-sleeve	Stainless steel	41,91	53,01	14,50	Metric
99167	SKF Speedi-sleeve	Stainless steel	42,88	48,41	11,13	Metric
99168	SKF Speedi-sleeve	Stainless steel	42,88	48,41	17,48	Metric
99169	SKF Speedi-sleeve	Stainless steel	41,91	53,01	17,50	Metric
99170	SKF Speedi-sleeve	Stainless steel	44,17	52,40	12,70	Metric
99171	SKF Speedi-sleeve	Stainless steel	43,66	51,59	17,48	Metric
99172	SKF Speedi-sleeve	Stainless steel	44,45	52,20	12,70	Metric
99174	SKF Speedi-sleeve	Stainless steel	44,45	52,40	17,48	Metric
99175	SKF Speedi-sleeve	Stainless steel	44,45	52,40	22,23	Metric
99176	SKF Speedi-sleeve	Stainless steel	44,86	52,40	17,48	Metric
99177	SKF Speedi-sleeve	Stainless steel	45,01	53,01	16,99	Metric
99179	SKF Speedi-sleeve	Stainless steel	45,24	53,98	20,32	Metric
99180	SKF Speedi-sleeve	Stainless steel	44,45	52,40	15,88	Metric
99181	SKF Speedi-sleeve	Stainless steel	46,05	53,09	17,48	Metric
99182	SKF Speedi-sleeve	Stainless steel	43,00	48,41	15,88	Metric
99184	SKF Speedi-sleeve	Stainless steel	47,63	55,96	13,11	Metric
99185	SKF Speedi-sleeve	Stainless steel	47,22	54,76	17,48	Metric
99186	SKF Speedi-sleeve	Stainless steel	47,45	55,58	26,04	Metric
99187	SKF Speedi-sleeve	Stainless steel	47,63	55,96	17,48	Metric
99188	SKF Speedi-sleeve	Stainless steel	47,63	55,96	10,54	Metric
99189	SKF Speedi-sleeve	Stainless steel	48,03	56,01	16,97	Metric
99190	SKF Speedi-sleeve	Stainless steel	47,63	55,96	7,49	Metric
99192	SKF Speedi-sleeve	Stainless steel	48,56	56,36	12,70	Metric
99193	SKF Speedi-sleeve	Stainless steel	49,23	56,36	17,48	Metric
99196	SKF Speedi-sleeve	Stainless steel	50,01	57,00	16,97	Metric
99198	SKF Speedi-sleeve	Stainless steel	50,29	58,75	17,88	Metric
99199	SKF Speedi-sleeve	Stainless steel	50,80	61,11	17,48	Metric
99200	SKF Speedi-sleeve	Stainless steel	50,80	61,11	25,40	Metric
99205	SKF Speedi-sleeve	Stainless steel	52,40	62,71	23,83	Metric
99210	SKF Speedi-sleeve	Stainless steel	53,98	61,52	19,05	Metric
99212	SKF Speedi-sleeve	Stainless steel	53,98	61,52	23,83	Metric
99215	SKF Speedi-sleeve	Stainless steel	54,99	62,00	22,99	Metric
99218	SKF Speedi-sleeve	Stainless steel	55,58	63,50	23,83	Metric
99219	SKF Speedi-sleeve	Stainless steel	57,99	65,99	23,83	Metric
99220	SKF Speedi-sleeve	Stainless steel	56,01	64,29	15,88	Metric
99224	SKF Speedi-sleeve	Stainless steel	56,01	64,29	23,77	Metric
99225	SKF Speedi-sleeve	Stainless steel	57,15	64,29	23,83	Metric
99226	SKF Speedi-sleeve	Stainless steel	56,90	65,10	22,86	Metric
99227	SKF Speedi-sleeve	Stainless steel	57,15	64,29	11,13	Metric
99229	SKF Speedi-sleeve	Stainless steel	56,64	64,29	15,88	Metric
99230	SKF Speedi-sleeve	Stainless steel	56,64	64,29	23,01	Metric
99231	SKF Speedi-sleeve	Stainless steel	58,75	68,28	23,83	Metric
99233	SKF Speedi-sleeve	Stainless steel	59,13	69,85	22,23	Metric
99235	SKF Speedi-sleeve	Stainless steel	59,99	70,74	22,99	Metric
99237	SKF Speedi-sleeve	Stainless steel	60,33	69,85	23,83	Metric
99238	SKF Speedi-sleeve	Stainless steel	60,33	69,85	19,05	Metric
99240	SKF Speedi-sleeve	Stainless steel	60,33	69,85	17,35	Metric
99241	SKF Speedi-sleeve	Stainless steel	59,99	70,74	11,43	Metric
99242	SKF Speedi-sleeve	Stainless steel	61,93	71,83	15,88	Metric
99243	SKF Speedi-sleeve	Stainless steel	61,93	71,83	23,83	Metric
99244	SKF Speedi-sleeve	Stainless steel	62,00	71,83	15,88	Metric

Numerical designation	Design	Material	Inner diameter	Outer diameter	Width	Metric or inch value
99248	SKF Speedi-sleeve	Stainless steel	63,50	71,83	16,66	Metric
99249	SKF Speedi-sleeve	Stainless steel	63,30	73,03	23,83	Metric
99250	SKF Speedi-sleeve	Stainless steel	63,50	71,63	23,83	Metric
99251	SKF Speedi-sleeve	Stainless steel	63,91	71,83	23,01	Metric
99253	SKF Speedi-sleeve	Stainless steel	63,50	71,63	16,51	Metric
99254	SKF Speedi-sleeve	Stainless steel	65,00	72,39	22,99	Metric
99256	SKF Speedi-sleeve	Stainless steel	65,10	73,43	23,83	Metric
99259	SKF Speedi-sleeve	Stainless steel	65,99	75,95	23,83	Metric
99260	SKF Speedi-sleeve	Stainless steel	66,68	77,39	15,88	Metric
99261	SKF Speedi-sleeve	Stainless steel	66,57	77,39	23,83	Metric
99262	SKF Speedi-sleeve	Stainless steel	66,68	77,39	23,83	Metric
99264	SKF Speedi-sleeve	Stainless steel	66,68	77,39	23,01	Metric
99266	SKF Speedi-sleeve	Stainless steel	68,00	79,38	22,23	Metric
99267	SKF Speedi-sleeve	Stainless steel	69,85	78,11	41,28	Metric
99268	SKF Speedi-sleeve	Stainless steel	69,34	79,38	23,01	Metric
99269	SKF Speedi-sleeve	Stainless steel	69,85	79,38	31,75	Metric
99272	SKF Speedi-sleeve	Stainless steel	69,85	79,38	14,30	Metric
99273	SKF Speedi-sleeve	Stainless steel	69,67	77,85	23,83	Metric
99274	SKF Speedi-sleeve	Stainless steel	69,85	79,38	23,83	Metric
99275	SKF Speedi-sleeve	Stainless steel	69,85	79,38	23,83	Metric
99276	SKF Speedi-sleeve	Stainless steel	70,00	79,38	24,00	Metric
99281	SKF Speedi-sleeve	Stainless steel	71,45	80,98	17,48	Metric
99282	SKF Speedi-sleeve	Stainless steel	72,09	81,92	16,66	Metric
99284	SKF Speedi-sleeve	Stainless steel	72,01	81,92	22,23	Metric
99286	SKF Speedi-sleeve	Stainless steel	72,87	80,98	23,83	Metric
99287	SKF Speedi-sleeve	Stainless steel	73,03	81,76	23,83	Metric
99289	SKF Speedi-sleeve	Stainless steel	75,01	83,13	17,53	Metric
99290	SKF Speedi-sleeve	Stainless steel	74,63	84,94	16,28	Metric
99291	SKF Speedi-sleeve	Stainless steel	76,02	85,32	15,88	Metric
99292	SKF Speedi-sleeve	Stainless steel	75,54	82,17	25,40	Metric
99293	SKF Speedi-sleeve	Stainless steel	74,68	84,94	23,83	Metric
99294	SKF Speedi-sleeve	Stainless steel	75,01	83,95	26,01	Metric
99296	SKF Speedi-sleeve	Stainless steel	76,20	82,30	23,83	Metric
99298	SKF Speedi-sleeve	Stainless steel	76,02	85,32	17,48	Metric
99299	SKF Speedi-sleeve	Stainless steel	76,02	85,09	25,40	Metric
99300	SKF Speedi-sleeve	Stainless steel	76,20	82,17	25,40	Metric
99301	SKF Speedi-sleeve	Stainless steel	76,48	85,22	15,88	Metric
99306	SKF Speedi-sleeve	Stainless steel	78,00	88,09	22,23	Metric
99311	SKF Speedi-sleeve	Stainless steel	79,38	89,69	20,65	Metric
99312	SKF Speedi-sleeve	Stainless steel	79,38	89,69	25,40	Metric
99313	SKF Speedi-sleeve	Stainless steel	80,01	89,92	22,50	Metric
99315	SKF Speedi-sleeve	Stainless steel	80,01	89,99	24,00	Metric
99317	SKF Speedi-sleeve	Stainless steel	80,01	89,99	15,01	Metric
99322	SKF Speedi-sleeve	Stainless steel	82,55	91,29	25,40	Metric
99324	SKF Speedi-sleeve	Stainless steel	82,55	90,81	18,26	Metric
99325	SKF Speedi-sleeve	Stainless steel	82,55	91,06	25,40	Metric
99326	SKF Speedi-sleeve	Stainless steel	82,55	91,06	22,23	Metric
99328	SKF Speedi-sleeve	Stainless steel	81,99	91,06	21,54	Metric
99331	SKF Speedi-sleeve	Stainless steel	84,07	93,68	25,40	Metric
99332	SKF Speedi-sleeve	Stainless steel	84,89	93,98	21,01	Metric
99333	SKF Speedi-sleeve	Stainless steel	84,89	93,98	24,99	Metric
99334	SKF Speedi-sleeve	Stainless steel	85,01	90,93	12,67	Metric
99337	SKF Speedi-sleeve	Stainless steel	85,73	93,85	25,40	Metric
99338	SKF Speedi-sleeve	Stainless steel	85,73	93,68	12,70	Metric
99339	SKF Speedi-sleeve	Stainless steel	87,33	97,64	23,01	Metric
99340	SKF Speedi-sleeve	Stainless steel	88,39	97,41	23,01	Metric
99346	SKF Speedi-sleeve	Stainless steel	88,90	97,64	20,65	Metric
99347	SKF Speedi-sleeve	Stainless steel	88,90	97,16	12,70	Metric
99349	SKF Speedi-sleeve	Stainless steel	89,00	97,64	20,65	Metric
99350	SKF Speedi-sleeve	Stainless steel	88,90	97,64	25,40	Metric
99351	SKF Speedi-sleeve	Stainless steel	89,99	101,60	23,01	Metric
99352	SKF Speedi-sleeve	Stainless steel	89,99	101,60	13,67	Metric
99353	SKF Speedi-sleeve	Stainless steel	89,99	101,60	16,94	Metric
99354	SKF Speedi-sleeve	Stainless steel	89,99	101,60	27,99	Metric
99356	SKF Speedi-sleeve	Stainless steel	90,50	99,06	25,40	Metric
99359	SKF Speedi-sleeve	Stainless steel	94,74	102,01	15,09	Metric
99360	SKF Speedi-sleeve	Stainless steel	91,97	102,39	25,40	Metric
99362	SKF Speedi-sleeve	Stainless steel	92,08	102,39	25,40	Metric
99363	SKF Speedi-sleeve	Stainless steel	92,08	102,24	15,88	Metric
99364	SKF Speedi-sleeve	Stainless steel	95,07	102,49	15,09	Metric
99365	SKF Speedi-sleeve	Stainless steel	93,68	102,24	23,83	Metric
99366	SKF Speedi-sleeve	Stainless steel	94,74	102,24	23,01	Metric
99367	SKF Speedi-sleeve	Stainless steel	95,33	102,24	12,70	Metric
99368	SKF Speedi-sleeve	Stainless steel	93,68	102,39	11,13	Metric
99369	SKF Speedi-sleeve	Stainless steel	95,00	102,24	24,00	Metric
99372	SKF Speedi-sleeve	Stainless steel	95,33	102,11	22,23	Metric
99374	SKF Speedi-sleeve	Stainless steel	95,07	102,39	12,70	Metric
99376	SKF Speedi-sleeve	Stainless steel	95,22	102,24	17,48	Metric
99386	SKF Speedi-sleeve	Stainless steel	98,32	106,30	25,40	Metric
99387	SKF Speedi-sleeve	Stainless steel	98,43	107,16	25,40	Metric
99393	SKF Speedi-sleeve	Stainless steel	100,03	109,55	25,40	Metric
99395	SKF Speedi-sleeve	Stainless steel	101,60	111,13	18,42	Metric
99399	SKF Speedi-sleeve	Stainless steel	101,60	111,13	25,40	Metric
99400	SKF Speedi-sleeve	Stainless steel	101,60	111,13	19,69	Metric
99401	SKF Speedi-sleeve	Stainless steel	101,60	111,13	15,88	Metric
99409	SKF Speedi-sleeve	Stainless steel	103,99	112,73	24,00	Metric

Numerical designation	Design	Material	Inner diameter	Outer diameter	Width	Metric or inch value
99412	SKF Speedi-sleeve	Stainless steel	104,78	113,54	25,40	Metric
99413	SKF Speedi-sleeve	Stainless steel	105,00	113,54	23,19	Metric
99418	SKF Speedi-sleeve	Stainless steel	106,38	114,30	25,40	Metric
99423	SKF Speedi-sleeve	Stainless steel	107,54	117,09	23,01	Metric
99424	SKF Speedi-sleeve	Stainless steel	107,95	117,09	25,40	Metric
99434	SKF Speedi-sleeve	Stainless steel	110,01	124,99	14,96	Metric
99435	SKF Speedi-sleeve	Stainless steel	109,93	124,99	16,51	Metric
99437	SKF Speedi-sleeve	Stainless steel	111,13	120,65	25,40	Metric
99438	SKF Speedi-sleeve	Stainless steel	111,99	120,65	22,50	Metric
99439	SKF Speedi-sleeve	Stainless steel	112,73	122,25	29,01	Metric
99450	SKF Speedi-sleeve	Stainless steel	114,30	124,46	25,40	Metric
99452	SKF Speedi-sleeve	Stainless steel	115,01	127,00	23,83	Metric
99463	SKF Speedi-sleeve	Stainless steel	117,48	128,60	31,75	Metric
99465	SKF Speedi-sleeve	Stainless steel	117,48	127,00	15,88	Metric
99468	SKF Speedi-sleeve	Stainless steel	119,08	128,60	25,40	Metric
99471	SKF Speedi-sleeve	Stainless steel	119,99	129,79	11,00	Metric
99472	SKF Speedi-sleeve	Stainless steel	122,00	131,50	24,00	Metric
99473	SKF Speedi-sleeve	Stainless steel	119,99	129,79	24,99	Metric
99475	SKF Speedi-sleeve	Stainless steel	120,65	127,00	19,05	Metric
99481	SKF Speedi-sleeve	Stainless steel	88,00	95,28	34,27	Metric
99482	SKF Speedi-sleeve	Stainless steel	128,00	135,26	34,27	Metric
99487	SKF Speedi-sleeve	Stainless steel	123,83	133,35	19,05	Metric
99490	SKF Speedi-sleeve	Stainless steel	124,99	137,16	14,00	Metric
99491	SKF Speedi-sleeve	Stainless steel	130,18	139,52	25,30	Metric
99492	SKF Speedi-sleeve	Stainless steel	124,99	137,16	32,00	Metric
99494	SKF Speedi-sleeve	Stainless steel	129,90	139,52	23,83	Metric
99498	SKF Speedi-sleeve	Stainless steel	127,00	137,16	22,23	Metric
99499	SKF Speedi-sleeve	Stainless steel	127,00	136,91	25,40	Metric
99501	SKF Speedi-sleeve	Stainless steel	127,00	137,16	17,30	Metric
99513	SKF Speedi-sleeve	Stainless steel	130,18	139,70	25,40	Metric
99525	SKF Speedi-sleeve	Stainless steel	133,35	141,22	25,40	Metric
99533	SKF Speedi-sleeve	Stainless steel	134,90	145,67	25,40	Metric
99537	SKF Speedi-sleeve	Stainless steel	136,53	149,23	25,40	Metric
99547	SKF Speedi-sleeve	Stainless steel	139,09	149,86	19,05	Metric
99548	SKF Speedi-sleeve	Stainless steel	138,13	146,05	42,88	Metric
99549	SKF Speedi-sleeve	Stainless steel	139,70	150,83	25,40	Metric
99550	SKF Speedi-sleeve	Stainless steel	139,70	150,83	17,91	Metric
99552	SKF Speedi-sleeve	Stainless steel	140,00	151,00	25,40	Metric
99560	SKF Speedi-sleeve	Stainless steel	142,88	157,18	25,40	Metric
99562	SKF Speedi-sleeve	Stainless steel	145,64	154,94	19,05	Metric
99571	SKF Speedi-sleeve	Stainless steel	145,01	154,94	22,23	Metric
99575	SKF Speedi-sleeve	Stainless steel	146,05	156,97	25,40	Metric
99587	SKF Speedi-sleeve	Stainless steel	149,23	157,18	31,75	Metric
99595	SKF Speedi-sleeve	Stainless steel	149,99	159,00	30,00	Metric
99596	SKF Speedi-sleeve	Stainless steel	150,83	161,93	28,58	Metric
99599	SKF Speedi-sleeve	Stainless steel	152,40	161,93	31,75	Metric
99601	SKF Speedi-sleeve	Stainless steel	152,40	161,54	19,05	Metric
99605	SKF Speedi-sleeve	Stainless steel	154,00	161,93	30,00	Metric
99606	SKF Speedi-sleeve	Stainless steel	154,86	167,01	30,00	Metric
99620	SKF Speedi-sleeve	Stainless steel	157,56	168,28	27,00	Metric
99625	SKF Speedi-sleeve	Stainless steel	158,75	168,28	31,75	Metric
99630	SKF Speedi-sleeve	Stainless steel	159,99	171,45	31,75	Metric
99640	SKF Speedi-sleeve	Stainless steel	169,88	182,58	38,00	Metric
99650	SKF Speedi-sleeve	Stainless steel	165,10	177,80	31,75	Metric
99675	SKF Speedi-sleeve	Stainless steel	171,45	180,98	27,00	Metric
99687	SKF Speedi-sleeve	Stainless steel	175,01	186,99	32,00	Metric
99700	SKF Speedi-sleeve	Stainless steel	177,80	189,87	31,75	Metric
99721	SKF Speedi-sleeve	Stainless steel	180,01	190,50	38,00	Metric
99725	SKF Speedi-sleeve	Stainless steel	184,15	197,10	38,10	Metric
99726	SKF Speedi-sleeve	Stainless steel	184,86	197,10	38,00	Metric
99745	SKF Speedi-sleeve	Stainless steel	189,31	199,64	25,40	Metric
99750	SKF Speedi-sleeve	Stainless steel	190,50	200,03	25,40	Metric
99775	SKF Speedi-sleeve	Stainless steel	196,85	210,06	33,35	Metric
99787	SKF Speedi-sleeve	Stainless steel	200,03	212,73	38,10	Metric
99799	SKF Speedi-sleeve	Stainless steel	201,63	212,73	31,75	Metric
99800	SKF Speedi-sleeve	Stainless steel	203,20	212,73	31,75	Metric
99810	SKF Speedi-sleeve	Stainless steel	15,88	19,05	10,31	Metric
99811	SKF Speedi-sleeve	Stainless steel	19,05	24,00	11,13	Metric
99812	SKF Speedi-sleeve	Stainless steel	22,23	27,79	11,13	Metric
99813	SKF Speedi-sleeve	Stainless steel	24,99	33,02	11,00	Metric
99814	SKF Speedi-sleeve	Stainless steel	25,40	30,96	11,13	Metric
99815	SKF Speedi-sleeve	Stainless steel	27,00	33,53	11,13	Metric
99816	SKF Speedi-sleeve	Stainless steel	28,58	38,10	11,13	Metric
99817	SKF Speedi-sleeve	Stainless steel	31,75	38,10	11,13	Metric
99818	SKF Speedi-sleeve	Stainless steel	33,35	40,49	15,88	Metric
99819	SKF Speedi-sleeve	Stainless steel	34,93	41,61	15,88	Metric
99820	SKF Speedi-sleeve	Stainless steel	34,93	41,61	16,00	Metric
99821	SKF Speedi-sleeve	Stainless steel	36,53	45,24	17,48	Metric
99822	SKF Speedi-sleeve	Stainless steel	38,10	45,24	17,48	Metric
99823	SKF Speedi-sleeve	Stainless steel	38,10	45,24	12,70	Metric
99824	SKF Speedi-sleeve	Stainless steel	39,67	47,22	17,48	Metric
99825	SKF Speedi-sleeve	Stainless steel	40,08	46,99	16,00	Metric
99826	SKF Speedi-sleeve	Stainless steel	41,28	47,63	17,48	Metric
99827	SKF Speedi-sleeve	Stainless steel	44,45	52,40	17,48	Metric
99828	SKF Speedi-sleeve	Stainless steel	44,45	52,40	22,23	Metric
99829	SKF Speedi-sleeve	Stainless steel	44,86	52,40	17,48	Metric

Numerical designation	Design	Material	Inner diameter	Outer diameter	Width	Metric or inch value
99830	SKF Speedi-sleeve	Stainless steel	45,01	53,01	16,99	Metric
99831	SKF Speedi-sleeve	Stainless steel	46,05	53,09	17,48	Metric
99832	SKF Speedi-sleeve	Stainless steel	47,63	55,96	17,48	Metric
99833	SKF Speedi-sleeve	Stainless steel	49,23	56,36	17,48	Metric
99834	SKF Speedi-sleeve	Stainless steel	50,80	61,11	17,48	Metric
99835	SKF Speedi-sleeve	Stainless steel	50,80	61,11	25,40	Metric
99836	SKF Speedi-sleeve	Stainless steel	53,98	61,52	23,83	Metric
99837	SKF Speedi-sleeve	Stainless steel	57,15	64,29	23,83	Metric
99838	SKF Speedi-sleeve	Stainless steel	57,15	64,29	11,13	Metric
99839	SKF Speedi-sleeve	Stainless steel	60,33	69,85	23,83	Metric
99840	SKF Speedi-sleeve	Stainless steel	63,50	71,63	23,83	Metric
99841	SKF Speedi-sleeve	Stainless steel	65,00	72,39	22,99	Metric
99842	SKF Speedi-sleeve	Stainless steel	66,68	77,39	23,83	Metric
99843	SKF Speedi-sleeve	Stainless steel	69,85	79,38	23,83	Metric
99844	SKF Speedi-sleeve	Stainless steel	69,85	79,38	23,83	Metric
99845	SKF Speedi-sleeve	Stainless steel	72,09	81,92	16,66	Metric
99846	SKF Speedi-sleeve	Stainless steel	73,03	81,76	23,83	Metric
99847	SKF Speedi-sleeve	Stainless steel	74,63	84,94	23,83	Metric
99848	SKF Speedi-sleeve	Stainless steel	76,20	82,17	25,40	Metric
99849	SKF Speedi-sleeve	Stainless steel	79,38	89,69	25,40	Metric
99850	SKF Speedi-sleeve	Stainless steel	82,55	90,81	18,26	Metric
99851	SKF Speedi-sleeve	Stainless steel	82,55	91,06	25,40	Metric
99852	SKF Speedi-sleeve	Stainless steel	88,90	97,64	25,40	Metric
99853	SKF Speedi-sleeve	Stainless steel	95,25	102,11	22,23	Metric
99854	SKF Speedi-sleeve	Stainless steel	100,03	109,55	25,40	Metric
99855	SKF Speedi-sleeve	Stainless steel	101,60	111,13	25,40	Metric
99856	SKF Speedi-sleeve	Stainless steel	114,30	123,19	25,40	Metric
99857	SKF Speedi-sleeve	Stainless steel	127,00	137,16	22,23	Metric
99858	SKF Speedi-sleeve	Stainless steel	127,00	136,91	25,40	Metric
99859	SKF Speedi-sleeve	Stainless steel	139,70	150,83	25,40	Metric
99860	SKF Speedi-sleeve	Stainless steel	23,11	30,94	11,13	Metric
99861	SKF Speedi-sleeve	Stainless steel	56,64	64,29	15,88	Metric
99862	SKF Speedi-sleeve	Stainless steel	149,23	157,18	31,75	Metric
99863	SKF Speedi-sleeve	Stainless steel	54,99	62,00	22,99	Metric
99864	SKF Speedi-sleeve	Stainless steel	177,80	189,87	31,75	Metric
99866	SKF Speedi-sleeve	Stainless steel	27,99	34,93	12,70	Metric
99868	SKF Speedi-sleeve	Stainless steel	25,40	30,96	11,13	Metric
99869	SKF Speedi-sleeve	Stainless steel	59,99	70,74	22,99	Metric
99870	SKF Speedi-sleeve	Stainless steel	72,01	81,92	22,23	Metric
99872	SKF Speedi-sleeve	Stainless steel	84,89	93,98	24,99	Metric
99873	SKF Speedi-sleeve	Stainless steel	42,01	53,01	17,50	Metric
99874	SKF Speedi-sleeve	Stainless steel	130,00	139,52	25,30	Metric
99875	SKF Speedi-sleeve	Stainless steel	75,01	83,95	26,01	Metric

Numerical designation	Design	Material	Inner diameter	Outer diameter	Width	Metric or inch value
99878	SKF Speedi-sleeve	Stainless steel	51,99	62,71	15,88	Metric
100044	CRWHA1	NBR	10.000	11.252	0.625	Inch
100051	CRWH1	NBR	10.000	12.000	0.625	Inch
100075	CRWA1	NBR	10.000	12.000	0.625	Inch
102520	CRWH1	NBR	10.250	11.250	0.563	Inch
102540	CRWH1	NBR	10.250	12.250	0.625	Inch
105010	CRWH1	NBR	10.500	11.750	0.625	Inch
105051	CRWH1	NBR	10.500	12.500	0.625	Inch
107551	CRWH1	NBR	10.750	12.750	0.625	Inch
108710	HDDF	Steel	276,23	329,41		Metric
110030	CRWHA1	NBR	11.000	12.250	0.625	Inch
110051	CRWH1	NBR	11.000	13.000	0.625	Inch
113740	CRW1	NBR	11.375	13.000	0.625	Inch
115021	CRWH1	NBR	11.500	13.000	0.625	Inch
115041	CRWH1	NBR	11.500	13.500	0.625	Inch
116500	HDDF	Steel	295,28	336,55		Metric
120060	CRW1	NBR	12.000	14.000	0.625	Inch
122555	CRWH1	NBR	12.250	13.375	0.625	Inch
122580	CRW1	NBR	12.250	13.813	0.625	Inch
122590	CRWHA1	NBR	12.250	14.250	1.000	Inch
124020	HDDF	Steel	314,96	365,13		Metric
137570	HDDF	Steel	349,25	401,75		Metric
171025	HDDF	Steel	434,98	488,70		Metric
191022	HDDF	Steel	485,78	546,10		Metric
238020	HDDF	Steel	606,43	682,63		Metric

Numerical designation	Design	Material	Shaft size min.	Shaft size max	Width	Metric or inch value
400030	VR1	NBR	2,70	3,50	3,00	Metric
400034	VR1	FKM	2,70	3,50	3,00	Metric
400040	VR1	NBR	3,50	4,50	3,70	Metric
400044	VR1	FKM	3,50	4,50	3,70	Metric
400050	VR1	NBR	4,50	5,50	3,70	Metric
400051	VR2	NBR	4,50	5,50	5,20	Metric
400054	VR1	FKM	4,50	5,50	3,70	Metric
400055	VR2	FKM	4,50	5,50	5,20	Metric
400060	VR1	NBR	5,50	6,50	3,70	Metric
400061	VR2	NBR	5,50	6,50	5,20	Metric
400064	VR1	FKM	5,50	6,50	3,70	Metric
400065	VR2	FKM	5,50	6,50	5,20	Metric
400070	VR1	NBR	6,50	8,00	3,70	Metric
400071	VR2	NBR	6,50	8,00	5,20	Metric
400074	VR1	FKM	6,50	8,00	3,70	Metric
400075	VR2	FKM	6,50	8,00	5,20	Metric
400080	VR1	NBR	8,00	9,50	3,70	Metric
400081	VR2	NBR	8,00	9,50	5,20	Metric
400084	VR1	FKM	8,00	9,50	3,70	Metric
400085	VR2	FKM	8,00	9,50	5,20	Metric
400100	VR1	NBR	9,50	11,50	5,50	Metric
400101	VR2	NBR	9,50	11,50	7,70	Metric
400104	VR1	FKM	9,50	11,50	5,50	Metric
400105	VR2	FKM	9,50	11,50	7,70	Metric
400120	VR1	NBR	11,50	12,50	5,50	Metric
400121	VR2	NBR	11,50	12,50	7,70	Metric
400124	VR1	FKM	11,50	12,50	5,50	Metric
400125	VR2	FKM	11,50	12,50	7,70	Metric
400130	VR1	NBR	12,50	13,50	5,50	Metric
400134	VR1	FKM	12,50	13,50	5,50	Metric
400140	VR1	NBR	13,50	15,50	5,50	Metric
400141	VR2	NBR	13,50	15,50	7,70	Metric
400144	VR1	FKM	13,50	15,50	5,50	Metric
400145	VR2	FKM	13,50	15,50	7,70	Metric
400160	VR1	NBR	15,50	17,00	5,50	Metric
400161	VR2	NBR	15,50	17,50	7,70	Metric
400164	VR1	FKM	15,50	17,00	5,50	Metric
400165	VR2	FKM	15,50	17,50	7,70	Metric
400180	VR1	NBR	17,50	19,00	5,50	Metric
400181	VR2	NBR	17,50	19,00	7,70	Metric
400184	VR1	FKM	17,50	19,00	5,50	Metric

Numerical designation	Design	Material	Shaft size min.	Shaft size max.	Width	Metric or inch value
400185	VR2	FKM	17,50	19,00	7,70	Metric
400200	VR1	NBR	19,00	21,00	7,50	Metric
400201	VR2	NBR	19,00	21,00	10,50	Metric
400204	VR1	FKM	19,00	21,00	7,50	Metric
400205	VR2	FKM	19,00	21,00	10,50	Metric
400220	VR1	NBR	21,00	24,00	7,50	Metric
400221	VR2	NBR	21,00	24,00	10,50	Metric
400224	VR1	FKM	21,00	24,00	7,50	Metric
400225	VR2	FKM	21,00	24,00	10,50	Metric
400250	VR1	NBR	24,00	27,00	7,50	Metric
400251	VR2	NBR	24,00	27,00	10,50	Metric
400254	VR1	FKM	24,00	27,00	7,50	Metric
400255	VR2	FKM	24,00	27,00	10,50	Metric
400280	VR1	NBR	27,00	29,00	7,50	Metric
400281	VR2	NBR	27,00	29,00	10,50	Metric
400284	VR1	FKM	27,00	29,00	7,50	Metric
400285	VR2	FKM	27,00	29,00	10,50	Metric
400300	VR1	NBR	29,00	31,00	7,50	Metric
400301	VR2	NBR	29,00	31,00	10,50	Metric
400304	VR1	FKM	29,00	31,00	7,50	Metric
400305	VR2	FKM	29,00	31,00	10,50	Metric
400320	VR1	NBR	31,00	33,00	7,50	Metric
400321	VR2	NBR	31,00	33,00	10,50	Metric
400324	VR1	FKM	31,00	33,00	7,50	Metric
400325	VR2	FKM	31,00	33,00	10,50	Metric
400350	VR1	NBR	33,00	36,00	7,50	Metric
400351	VR2	NBR	33,00	36,00	10,50	Metric
400354	VR1	FKM	33,00	36,00	7,50	Metric
400355	VR2	FKM	33,00	36,00	10,50	Metric
400380	VR1	NBR	36,00	38,00	7,50	Metric
400381	VR2	NBR	36,00	38,00	10,50	Metric
400384	VR1	FKM	36,00	38,00	7,50	Metric
400385	VR2	FKM	36,00	38,00	10,50	Metric
400400	VR1	NBR	38,00	43,00	9,00	Metric
400401	VR2	NBR	38,00	43,00	13,00	Metric
400405	VR2	FKM	38,00	43,00	13,00	Metric
400409	VR1	FKM	38,00	43,00	9,00	Metric
400450	VR1	NBR	43,00	48,00	9,00	Metric
400451	VR2	NBR	43,00	48,00	13,00	Metric
400454	VR1	FKM	43,00	48,00	9,00	Metric
400455	VR2	FKM	43,00	48,00	13,00	Metric
400500	VR1	NBR	48,00	53,00	9,00	Metric
400501	VR2	NBR	48,00	53,00	13,00	Metric
400504	VR1	FKM	48,00	53,00	9,00	Metric
400505	VR2	FKM	48,00	53,00	13,00	Metric
400550	VR1	NBR	53,00	58,00	9,00	Metric
400551	VR2	NBR	53,00	58,00	13,00	Metric
400554	VR1	FKM	53,00	58,00	9,00	Metric
400555	VR2	FKM	53,00	58,00	13,00	Metric
400600	VR1	NBR	58,00	63,00	9,00	Metric
400601	VR2	NBR	58,00	63,00	13,00	Metric
400604	VR1	FKM	58,00	63,00	9,00	Metric
400605	VR2	FKM	58,00	63,00	13,00	Metric
400650	VR1	NBR	63,00	68,00	9,00	Metric
400651	VR2	NBR	63,00	68,00	13,00	Metric
400654	VR1	FKM	63,00	68,00	9,00	Metric
400655	VR2	FKM	63,00	68,00	13,00	Metric
400700	VR1	NBR	68,00	73,00	11,00	Metric
400701	VR2	NBR	68,00	73,00	15,50	Metric
400704	VR1	FKM	68,00	73,00	11,00	Metric
400705	VR2	FKM	68,00	73,00	15,50	Metric
400750	VR1	NBR	73,00	78,00	11,00	Metric
400751	VR2	NBR	73,00	78,00	11,00	Metric
400755	VR2	FKM	73,00	78,00	15,50	Metric
400800	VR1	NBR	78,00	83,00	11,00	Metric
400801	VR2	NBR	78,00	83,00	15,50	Metric
400804	VR1	FKM	78,00	83,00	11,00	Metric
400805	VR2	FKM	78,00	83,00	15,50	Metric
400850	VR1	NBR	83,00	88,00	11,00	Metric
400851	VR2	NBR	83,00	88,00	15,50	Metric
400854	VR1	FKM	83,00	88,00	11,00	Metric
400855	VR2	FKM	83,00	88,00	15,50	Metric
400900	VR1	NBR	88,00	93,00	11,00	Metric
400901	VR2	NBR	88,00	93,00	15,50	Metric
400904	VR1	FKM	88,00	93,00	11,00	Metric
400905	VR2	FKM	88,00	93,00	15,50	Metric
400950	VR1	NBR	93,00	98,00	11,00	Metric
400951	VR2	NBR	93,00	98,00	15,50	Metric
400954	VR1	FKM	93,00	98,00	11,00	Metric
400955	VR2	FKM	93,00	98,00	15,50	Metric
401000	VR1	NBR	98,00	105,00	11,00	Metric
401001	VR2	NBR	98,00	105,00	15,50	Metric
401004	VR1	FKM	98,00	105,00	11,00	Metric
401005	VR2	FKM	98,00	105,00	15,50	Metric
401100	VR1	NBR	105,00	115,00	12,80	Metric
401101	VR2	NBR	105,00	115,00	18,00	Metric
401102	VR3	NBR	105,00	115,00	10,50	Metric
401104	VR1	FKM	105,00	115,00	12,80	Metric
401105	VR2	FKM	105,00	115,00	18,00	Metric
401106	VR3	FKM	105,00	115,00	10,50	Metric
401200	VR1	NBR	115,00	125,00	12,80	Metric
401201	VR2	NBR	115,00	125,00	18,00	Metric
401202	VR3	NBR	115,00	125,00	10,50	Metric
401204	VR1	FKM	115,00	125,00	12,80	Metric
401205	VR2	FKM	115,00	125,00	18,00	Metric
401206	VR3	FKM	115,00	125,00	10,50	Metric
401300	VR1	NBR	125,00	135,00	12,80	Metric
401301	VR2	NBR	125,00	135,00	18,00	Metric
401304	VR1	FKM	125,00	135,00	12,80	Metric
401305	VR2	FKM	125,00	135,00	18,00	Metric
401306	VR3	FKM	125,00	135,00	10,50	Metric
401400	VR1	NBR	135,00	145,00	12,80	Metric
401401	VR2	NBR	135,00	145,00	18,00	Metric
401402	VR3	NBR	135,00	145,00	10,50	Metric
401404	VR1	FKM	135,00	145,00	12,80	Metric
401405	VR2	FKM	135,00	145,00	18,00	Metric
401406	VR3	FKM	135,00	145,00	10,50	Metric
401500	VR1	NBR	145,00	155,00	12,80	Metric
401501	VR2	NBR	145,00	155,00	18,00	Metric
401502	VR3	NBR	145,00	155,00	10,50	Metric
401504	VR1	FKM	145,00	155,00	12,80	Metric
401505	VR2	FKM	145,00	155,00	18,00	Metric
401506	VR3	FKM	145,00	155,00	10,50	Metric
401600	VR1	NBR	155,00	165,00	14,50	Metric
401601	VR2	NBR	155,00	165,00	20,50	Metric
401602	VR3	NBR	155,00	165,00	10,50	Metric
401604	VR1	FKM	155,00	165,00	14,50	Metric
401605	VR2	FKM	155,00	165,00	20,50	Metric
401606	VR3	FKM	155,00	165,00	10,50	Metric
401700	VR1	NBR	165,00	175,00	14,50	Metric
401701	VR2	NBR	165,00	175,00	20,50	Metric
401702	VR3	NBR	165,00	175,00	10,50	Metric
401704	VR1	FKM	165,00	175,00	14,50	Metric
401705	VR2	FKM	165,00	175,00	20,50	Metric
401706	VR3	FKM	165,00	175,00	10,50	Metric
401800	VR1	NBR	175,00	185,00	14,50	Metric
401801	VR2	NBR	175,00	185,00	20,50	Metric
401802	VR3	NBR	175,00	185,00	10,50	Metric
401804	VR1	FKM	175,00	185,00	14,50	Metric
401805	VR2	FKM	175,00	185,00	20,50	Metric
401806	VR3	FKM	175,00	185,00	10,50	Metric
401900	VR1	NBR	185,00	195,00	14,50	Metric
401901	VR2	NBR	185,00	195,00	20,50	Metric
401902	VR3	NBR	185,00	195,00	10,50	Metric
401904	VR1	FKM	185,00	195,00	14,50	Metric
401905	VR2	FKM	185,00	195,00	20,50	Metric
401906	VR3	FKM	185,00	195,00	10,50	Metric
401990	VR1	NBR	195,00	210,00	14,50	Metric
401991	VR2	NBR	195,00	210,00	20,50	Metric
401994	VR1	FKM	195,00	210,00	14,50	Metric
401995	VR2	FKM	195,00	210,00	20,50	Metric
402000	VR1	NBR	190,00	210,00	25,00	Metric
402004	VR1	FKM	190,00	210,00	25,00	Metric
402006	VR3	FKM	195,00	210,00	10,50	Metric
402200	VR1	NBR	210,00	235,00	25,00	Metric
402202	VR3	NBR	210,00	233,00	10,50	Metric

Numerical designation	Design	Material	Shaft size min.	Shaft size max.	Width	Metric or inch value
402204	VR1	FKM	210,00	235,00	25,00	Metric
402206	VR3	FKM	210,00	233,00	10,50	Metric
402500	VR1	NBR	235,00	265,00	25,00	Metric
402502	VR3	NBR	233,00	260,00	10,50	Metric
402504	VR1	FKM	235,00	265,00	25,00	Metric
402506	VR3	FKM	233,00	260,00	10,50	Metric
402750	VR1	NBR	265,00	290,00	25,00	Metric
402752	VR3	NBR	260,00	285,00	10,50	Metric
402754	VR1	FKM	265,00	290,00	25,00	Metric
402756	VR3	FKM	260,00	285,00	10,50	Metric
403000	VR1	NBR	290,00	310,00	25,00	Metric
403002	VR3	NBR	285,00	310,00	10,50	Metric
403003	VR4	NBR	300,00	305,00	65,00	Metric
403004	VR1	FKM	290,00	310,00	25,00	Metric
403006	VR3	FKM	285,00	310,00	10,50	Metric
403053	VR4	NBR	305,00	310,00	65,00	Metric
403103	VR4	NBR	310,00	315,00	65,00	Metric
403153	VR4	NBR	315,00	320,00	65,00	Metric
403203	VR4	NBR	320,00	325,00	65,00	Metric
403250	VR1	NBR	310,00	335,00	25,00	Metric
403252	VR3	NBR	310,00	335,00	10,50	Metric
403253	VR4	NBR	325,00	330,00	65,00	Metric
403254	VR1	FKM	310,00	335,00	25,00	Metric
403256	VR3	FKM	310,00	335,00	10,50	Metric
403303	VR4	NBR	330,00	335,00	65,00	Metric
403353	VR4	NBR	335,00	340,00	65,00	Metric
403403	VR4	NBR	340,00	345,00	65,00	Metric
403453	VR4	NBR	345,00	350,00	65,00	Metric
403500	VR1	NBR	335,00	365,00	25,00	Metric
403502	VR3	NBR	335,00	365,00	10,50	Metric
403503	VR4	NBR	350,00	355,00	65,00	Metric
403504	VR1	FKM	335,00	365,00	25,00	Metric
403506	VR3	FKM	335,00	365,00	10,50	Metric
403553	VR4	NBR	355,00	360,00	65,00	Metric
403603	VR4	NBR	360,00	365,00	65,00	Metric
403653	VR4	NBR	365,00	370,00	65,00	Metric
403703	VR4	NBR	370,00	375,00	65,00	Metric
403750	VR1	NBR	365,00	390,00	25,00	Metric
403752	VR3	NBR	365,00	385,00	10,50	Metric
403753	VR4	NBR	375,00	380,00	65,00	Metric
403754	VR1	FKM	365,00	390,00	25,00	Metric
403756	VR3	FKM	365,00	385,00	10,50	Metric
403803	VR4	NBR	380,00	385,00	65,00	Metric
403853	VR4	NBR	385,00	390,00	65,00	Metric
403903	VR4	NBR	390,00	395,00	65,00	Metric
403953	VR4	NBR	395,00	400,00	65,00	Metric
404000	VR1	NBR	390,00	430,00	25,00	Metric
404002	VR3	NBR	385,00	410,00	10,50	Metric
404053	VR4	NBR	405,00	410,00	65,00	Metric
404103	VR4	NBR	410,00	415,00	65,00	Metric
404153	VR4	NBR	415,00	420,00	65,00	Metric
404252	VR3	NBR	410,00	440,00	10,50	Metric
404253	VR4	NBR	425,00	430,00	65,00	Metric
404256	VR3	FKM	410,00	440,00	10,50	Metric
404303	VR4	NBR	430,00	435,00	65,00	Metric
404353	VR4	NBR	435,00	440,00	65,00	Metric
404453	VR4	NBR	445,00	450,00	65,00	Metric
404500	VR1	NBR	430,00	480,00	25,00	Metric
404502	VR3	NBR	440,00	475,00	10,50	Metric
404503	VR4	NBR	450,00	455,00	65,00	Metric
404504	VR1	FKM	430,00	480,00	25,00	Metric
404506	VR3	FKM	440,00	475,00	10,50	Metric
404553	VR4	NBR	455,00	460,00	65,00	Metric
404653	VR4	NBR	465,00	470,00	65,00	Metric
404703	VR4	NBR	470,00	475,00	65,00	Metric
404753	VR4	NBR	475,00	480,00	65,00	Metric
404803	VR4	NBR	480,00	485,00	65,00	Metric
404853	VR4	NBR	485,00	490,00	65,00	Metric
404903	VR4	NBR	490,00	495,00	65,00	Metric
404953	VR4	NBR	495,00	500,00	65,00	Metric
405000	VR1	NBR	480,00	530,00	25,00	Metric
405002	VR3	NBR	475,00	510,00	10,50	Metric
405003	VR4	NBR	500,00	505,00	65,00	Metric
405004	VR1	FKM	480,00	530,00	25,00	Metric
405009	VR3	FKM	475,00	510,00	10,50	Metric
405053	VR4	NBR	505,00	510,00	65,00	Metric
405103	VR4	NBR	510,00	515,00	65,00	Metric
405153	VR4	NBR	515,00	520,00	65,00	Metric
405203	VR4	NBR	520,00	525,00	65,00	Metric
405252	VR3	NBR	510,00	540,00	10,50	Metric
405253	VR4	NBR	525,00	530,00	65,00	Metric
405256	VR3	FKM	510,00	540,00	10,50	Metric
405303	VR4	NBR	530,00	535,00	65,00	Metric
405353	VR4	NBR	535,00	540,00	65,00	Metric
405403	VR4	NBR	540,00	545,00	65,00	Metric
405453	VR4	NBR	545,00	550,00	65,00	Metric
405500	VR1	NBR	530,00	580,00	25,00	Metric
405502	VR3	NBR	540,00	575,00	10,50	Metric
405503	VR4	NBR	550,00	555,00	65,00	Metric
405504	VR1	FKM	530,00	580,00	25,00	Metric
405506	VR3	FKM	540,00	575,00	10,50	Metric
405553	VR4	NBR	555,00	560,00	65,00	Metric
405603	VR4	NBR	560,00	565,00	65,00	Metric
405653	VR4	NBR	565,00	570,00	65,00	Metric
405703	VR4	NBR	570,00	575,00	65,00	Metric
405753	VR4	NBR	575,00	580,00	65,00	Metric
405803	VR4	NBR	580,00	585,00	65,00	Metric
405853	VR4	NBR	585,00	590,00	65,00	Metric
405903	VR4	NBR	590,00	600,00	65,00	Metric
406000	VR1	NBR	580,00	630,00	25,00	Metric
406003	VR4	NBR	600,00	610,00	65,00	Metric
406500	VR1	NBR	630,00	665,00	25,00	Metric
406502	VR3	NBR	615,00	675,00	10,50	Metric
406503	VR4	NBR	650,00	660,00	65,00	Metric
406504	VR1	FKM	630,00	665,00	25,00	Metric
406506	VR3	FKM	615,00	675,00	10,50	Metric
406703	VR4	NBR	670,00	680,00	65,00	Metric
406803	VR4	NBR	680,00	690,00	65,00	Metric
406903	VR4	NBR	690,00	700,00	65,00	Metric
407000	VR1	NBR	665,00	705,00	25,00	Metric
407002	VR3	NBR	675,00	710,00	10,50	Metric
407003	VR4	NBR	700,00	710,00	65,00	Metric
407004	VR1	FKM	665,00	705,00	25,00	Metric
407006	VR3	FKM	675,00	710,00	10,50	Metric
407103	VR4	NBR	710,00	720,00	65,00	Metric
407203	VR4	NBR	720,00	730,00	65,00	Metric
407250	VR1	NBR	705,00	745,00	25,00	Metric
407252	VR3	NBR	710,00	740,00	10,50	Metric
407254	VR1	FKM	705,00	745,00	25,00	Metric
407256	VR3	FKM	710,00	740,00	10,50	Metric
407309	VR4	NBR	730,00	740,00	65,00	Metric
407403	VR4	NBR	740,00	750,00	65,00	Metric
407500	VR1	NBR	745,00	785,00	25,00	Metric
407502	VR3	NBR	740,00	775,00	10,50	Metric
407503	VR4	NBR	750,00	758,00	65,00	Metric
407504	VR1	FKM	745,00	785,00	25,00	Metric
407506	VR3	FKM	740,00	775,00	10,50	Metric
407603	VR4	NBR	758,00	766,00	65,00	Metric
407703	VR4	NBR	766,00	774,00	65,00	Metric
407803	VR4	NBR	774,00	783,00	65,00	Metric
407903	VR4	NBR	783,00	792,00	65,00	Metric
408000	VR1	NBR	785,00	830,00	25,00	Metric
408002	VR3	NBR	775,00	825,00	10,50	Metric
408003	VR4	NBR	792,00	801,00	65,00	Metric
408004	VR1	FKM	785,00	830,00	25,00	Metric
408006	VR3	FKM	775,00	825,00	10,50	Metric
408103	VR4	NBR	801,00	810,00	65,00	Metric
408203	VR4	NBR	810,00	821,00	65,00	Metric
408303	VR4	NBR	821,00	831,00	65,00	Metric
408403	VR4	NBR	831,00	841,00	65,00	Metric
408500	VR1	NBR	830,00	875,00	25,00	Metric
408502	VR3	NBR	825,00	875,00	10,50	Metric
408503	VR4	NBR	841,00	851,00	65,00	Metric
408506	VR3	FKM	825,00	875,00	10,50	Metric
408603	VR4	NBR	851,00	861,00	65,00	Metric
408703	VR4	NBR	861,00	871,00	65,00	Metric

Numerical designation	Design	Material	Shaft size min.	Shaft size max.	Width	Metric or inch value
408803	VR4	NBR	871,00	882,00	65,00	Metric
408903	VR4	NBR	882,00	892,00	65,00	Metric
409000	VR1	NBR	875,00	920,00	25,00	Metric
409002	VR3	NBR	875,00	925,00	10,50	Metric
409003	VR4	NBR	892,00	912,00	65,00	Metric
409004	VR1	FKM	875,00	920,00	25,00	Metric
409006	VR3	FKM	875,00	925,00	10,50	Metric
409203	VR4	NBR	912,00	922,00	65,00	Metric
409303	VR4	NBR	922,00	933,00	65,00	Metric
409403	VR4	NBR	933,00	944,00	65,00	Metric
409500	VR1	NBR	920,00	965,00	25,00	Metric
409502	VR3	NBR	925,00	975,00	10,50	Metric
409503	VR4	NBR	944,00	955,00	65,00	Metric
409504	VR1	FKM	920,00	965,00	25,00	Metric
409506	VR3	FKM	925,00	975,00	10,50	Metric
409603	VR4	NBR	955,00	966,00	65,00	Metric
409703	VR4	NBR	966,00	977,00	65,00	Metric
409803	VR4	NBR	977,00	988,00	65,00	Metric
409903	VR4	NBR	988,00	999,00	65,00	Metric
410002	VR3	NBR	975,00	1025,00	10,50	Metric
410003	VR4	NBR	999,00	1010,00	65,00	Metric
410006	VR3	FKM	975,00	1025,00	10,50	Metric
410203	VR4	NBR	1010,00	1025,00	65,00	Metric
410403	VR4	NBR	1025,00	1045,00	65,00	Metric
410500	VR1	NBR	1015,00	1065,00	25,00	Metric
410502	VR3	NBR	1025,00	1075,00	10,50	Metric
410506	VR3	FKM	1025,00	1075,00	10,50	Metric
410603	VR4	NBR	1045,00	1065,00	65,00	Metric
410803	VR4	NBR	1065,00	1085,00	65,00	Metric
411000	VR1	NBR	1065,00	1115,00	25,00	Metric
411002	VR3	NBR	1075,00	1125,00	10,50	Metric
411003	VR4	NBR	1085,00	1105,00	65,00	Metric
411006	VR3	FKM	1075,00	1125,00	10,50	Metric
411203	VR4	NBR	1105,00	1125,00	65,00	Metric
411403	VR4	NBR	1125,00	1145,00	65,00	Metric
411500	VR1	NBR	1115,00	1165,00	25,00	Metric
411502	VR3	NBR	1125,00	1175,00	10,50	Metric
411506	VR3	FKM	1125,00	1175,00	10,50	Metric
411603	VR4	NBR	1145,00	1165,00	65,00	Metric
411803	VR4	NBR	1165,00	1185,00	65,00	Metric
412000	VR1	NBR	1165,00	1215,00	25,00	Metric
412002	VR3	NBR	1175,00	1225,00	10,50	Metric
412003	VR4	NBR	1185,00	1205,00	65,00	Metric
412203	VR4	NBR	1205,00	1225,00	65,00	Metric
412500	VR1	NBR	1215,00	1270,00	25,00	Metric
412502	VR3	NBR	1225,00	1275,00	10,50	Metric
412506	VR3	FKM	1225,00	1275,00	10,50	Metric
412603	VR4	NBR	1245,00	1270,00	65,00	Metric
412803	VR4	NBR	1270,00	1295,00	65,00	Metric
413000	VR1	NBR	1270,00	1380,00	25,00	Metric
413002	VR3	NBR	1275,00	1325,00	10,50	Metric
413003	VR4	NBR	1295,00	1315,00	65,00	Metric
413006	VR3	FKM	1275,00	1325,00	10,50	Metric
413253	VR4	NBR	1315,00	1340,00	65,00	Metric
413500	VR1	NBR	1320,00	1370,00	25,00	Metric
413502	VR3	NBR	1325,00	1375,00	10,50	Metric
413503	VR4	NBR	1340,00	1365,00	65,00	Metric
413506	VR3	FKM	1325,00	1375,00	10,50	Metric
413753	VR4	NBR	1365,00	1390,00	65,00	Metric
414000	VR1	NBR	1370,00	1420,00	25,00	Metric
414002	VR3	NBR	1375,00	1425,00	10,50	Metric
414003	VR4	NBR	1390,00	1415,00	65,00	Metric
414006	VR3	FKM	1375,00	1425,00	10,50	Metric
414253	VR4	NBR	1415,00	1440,00	65,00	Metric
414500	VR1	NBR	1420,00	1470,00	25,00	Metric
414502	VR3	NBR	1425,00	1475,00	10,50	Metric
414503	VR4	NBR	1440,00	1465,00	65,00	Metric
414506	VR3	FKM	1425,00	1475,00	10,50	Metric
414753	VR4	NBR	1465,00	1490,00	65,00	Metric
415000	VR1	NBR	1470,00	1520,00	25,00	Metric
415002	VR3	NBR	1475,00	1525,00	10,50	Metric
415003	VR4	NBR	1490,00	1515,00	65,00	Metric
415006	VR3	FKM	1475,00	1525,00	10,50	Metric
415253	VR4	NBR	1515,00	1540,00	65,00	Metric
415500	VR1	NBR	1520,00	1570,00	25,00	Metric
415502	VR3	NBR	1525,00	1575,00	10,50	Metric
415503	VR4	NBR	1540,00	1570,00	65,00	Metric
415506	VR3	FKM	1525,00	1575,00	10,50	Metric
415753	VR4	NBR	1570,00	1600,00	65,00	Metric
416000	VR1	NBR	1570,00	1620,00	25,00	Metric
416002	VR3	NBR	1575,00	1625,00	10,50	Metric
416003	VR4	NBR	1600,00	1640,00	65,00	Metric
416006	VR3	FKM	1575,00	1625,00	10,50	Metric
416500	VR1	NBR	1620,00	1670,00	25,00	Metric
416502	VR3	NBR	1625,00	1675,00	10,50	Metric
416503	VR4	NBR	1640,00	1680,00	65,00	Metric
416506	VR3	FKM	1625,00	1675,00	10,50	Metric
417000	VR1	NBR	1670,00	1720,00	25,00	Metric
417002	VR3	NBR	1675,00	1725,00	10,50	Metric
417003	VR4	NBR	1680,00	1720,00	65,00	Metric
417006	VR3	FKM	1675,00	1725,00	10,50	Metric
417500	VR1	NBR	1720,00	1770,00	25,00	Metric
417502	VR3	NBR	1725,00	1775,00	10,50	Metric
417503	VR4	NBR	1720,00	1765,00	65,00	Metric
417506	VR3	FKM	1725,00	1775,00	10,50	Metric
418000	VR1	NBR	1770,00	1820,00	25,00	Metric
418002	VR3	NBR	1775,00	1825,00	10,50	Metric
418003	VR4	NBR	1765,00	1810,00	65,00	Metric
418006	VR3	FKM	1775,00	1825,00	10,50	Metric
418500	VR1	NBR	1820,00	1870,00	25,00	Metric
418502	VR3	NBR	1825,00	1875,00	10,50	Metric
418503	VR4	NBR	1810,00	1855,00	65,00	Metric
418506	VR3	FKM	1825,00	1875,00	10,50	Metric
419000	VR1	NBR	1870,00	1920,00	25,00	Metric
419002	VR3	NBR	1875,00	1925,00	10,50	Metric
419003	VR4	NBR	1855,00	1905,00	65,00	Metric
419006	VR3	FKM	1875,00	1925,00	10,50	Metric
419500	VR1	NBR	1920,00	1970,00	25,00	Metric
419502	VR3	NBR	1925,00	1975,00	10,50	Metric
419503	VR4	NBR	1905,00	1955,00	65,00	Metric
419506	VR3	FKM	1925,00	1975,00	10,50	Metric
420000	VR1	NBR	1970,00	2020,00	25,00	Metric
420002	VR3	NBR	1975,00	2025,00	10,50	Metric
420003	VR4	NBR	1955,00	2010,00	65,00	Metric
420006	VR3	FKM	1975,00	2025,00	10,50	Metric
470301	VR6	NBR	300,00	305,00	65,00	Metric
470311	VR6	NBR	310,00	315,00	65,00	Metric
470326	VR6	NBR	325,00	330,00	65,00	Metric
470341	VR6	NBR	340,00	345,00	65,00	Metric
470351	VR6	NBR	350,00	355,00	65,00	Metric
470356	VR6	NBR	355,00	360,00	65,00	Metric
470371	VR6	NBR	370,00	375,00	65,00	Metric
470376	VR6	NBR	375,00	380,00	65,00	Metric
470381	VR6	NBR	380,00	385,00	65,00	Metric
470391	VR6	NBR	390,00	395,00	65,00	Metric
470401	VR6	NBR	400,00	405,00	65,00	Metric
470411	VR6	NBR	410,00	415,00	65,00	Metric
470421	VR6	NBR	420,00	425,00	65,00	Metric
470431	VR6	NBR	430,00	435,00	65,00	Metric
470450	VR5	NBR	450,00	455,00	100,00	Metric
470461	VR6	NBR	460,00	465,00	65,00	Metric
470476	VR6	NBR	475,00	480,00	65,00	Metric
470496	VR6	NBR	495,00	500,00	65,00	Metric
470526	VR6	NBR	525,00	530,00	65,00	Metric
470550	VR5	NBR	550,00	555,00	100,00	Metric
470600	VR5	NBR	600,00	610,00	100,00	Metric
470650	VR5	NBR	650,00	660,00	100,00	Metric
470651	VR6	NBR	650,00	660,00	65,00	Metric
470661	VR6	NBR	660,00	670,00	65,00	Metric
470671	VR6	NBR	670,00	680,00	65,00	Metric
470681	VR6	NBR	680,00	690,00	65,00	Metric
470691	VR6	NBR	690,00	700,00	65,00	Metric
470700	VR5	NBR	700,00	710,00	100,00	Metric
470750	VR5	NBR	750,00	758,00	100,00	Metric
470751	VR6	NBR	750,00	758,00	65,00	Metric
470761	VR6	NBR	758,00	766,00	65,00	Metric

Numerical designation	Design	Material	Shaft size min.	Shaft size max	Width	Metric or inch value
470791	VR6	NBR	783,00	792,00	65,00	Metric
470800	VR5	NBR	792,00	801,00	100,00	Metric
470801	VR6	NBR	792,00	801,00	65,00	Metric
470831	VR6	NBR	821,00	831,00	65,00	Metric
470850	VR5	NBR	841,00	851,00	100,00	Metric
470881	VR6	NBR	871,00	882,00	65,00	Metric
470900	VR5	NBR	892,00	912,00	100,00	Metric
470901	VR6	NBR	892,00	912,00	65,00	Metric
470950	VR5	NBR	944,00	955,00	100,00	Metric
470981	VR6	NBR	977,00	988,00	65,00	Metric
471000	VR5	NBR	999,00	1010,00	100,00	Metric
471041	VR6	NBR	1025,00	1045,00	65,00	Metric
471100	VR5	NBR	1085,00	1105,00	100,00	Metric
471200	VR5	NBR	1185,00	1205,00	100,00	Metric
471201	VR6	NBR	1185,00	1205,00	65,00	Metric
471300	VR5	NBR	1295,00	1315,00	100,00	Metric
471350	VR5	NBR	1340,00	1365,00	100,00	Metric
471400	VR5	NBR	1390,00	1415,00	100,00	Metric
471426	VR6	NBR	1415,00	1440,00	65,00	Metric
471450	VR5	NBR	1440,00	1465,00	100,00	Metric
471451	VR6	NBR	1440,00	1465,00	65,00	Metric
471500	VR5	NBR	1490,00	1515,00	100,00	Metric
471501	VR6	NBR	1490,00	1515,00	65,00	Metric
471550	VR5	NBR	1540,00	1570,00	100,00	Metric
471551	VR6	NBR	1540,00	1570,00	65,00	Metric
471600	VR5	NBR	1600,00	1640,00	100,00	Metric
471650	VR5	NBR	1640,00	1680,00	100,00	Metric
471700	VR5	NBR	1680,00	1720,00	100,00	Metric
471701	VR6	NBR	1680,00	1720,00	65,00	Metric
471750	VR5	NBR	1720,00	1765,00	100,00	Metric
471751	VR6	NBR	1720,00	1765,00	65,00	Metric
471800	VR5	NBR	1765,00	1810,00	100,00	Metric
471850	VR5	NBR	1810,00	1855,00	100,00	Metric
471851	VR6	NBR	1810,00	1855,00	65,00	Metric
471900	VR5	NBR	1855,00	1905,00	100,00	Metric
471901	VR6	NBR	1855,00	1905,00	65,00	Metric
471950	VR5	NBR	1905,00	1955,00	100,00	Metric
471951	VR6	NBR	1905,00	1955,00	65,00	Metric
472000	VR5	NBR	1955,00	2010,00	100,00	Metric

Numerical designation	Design	Material	Inner diameter	Outer diameter	Width	Metric or inch value
522676	CT1	NBR	44.882			Inch
522677	CT1	NBR	47.638			Inch
522679	CT1	NBR	17.520			Inch
522828	CT1	NBR	49.016			Inch
522856	CT1	NBR	100.000			Inch
523063	CT1	NBR	34.488			Inch
523133	CT1	NBR	42.520			Inch
523154	CT1	NBR	36.890			Inch
523184	CT1	NBR	23.740			Inch
523547	CT1	NBR	17.520			Inch
523584	CT1	NBR	39.882			Inch
523586	CT1	NBR	7.008			Inch
523587	CT1	NBR	12.992			Inch
523826	CT1	NBR	16.732			Inch
524204	CT1	NBR	9.000			Inch
524205	CT1	NBR	10.000			Inch
524206	CT1	NBR	11.024			Inch
524208	CT1	NBR	12.008			Inch
524209	CT1	NBR	12.992			Inch
524210	CT1	NBR	21.811			Inch
524211	CT1	NBR	21.929			Inch
524212	CT1	NBR	22.500			Inch
524213	CT1	NBR	24.764			Inch
524214	CT1	NBR	25.118			Inch
524215	CT1	NBR	26.929			Inch
524216	CT1	NBR	27.756			Inch
524217	CT1	NBR	29.724			Inch
524218	CT1	NBR	29.724			Inch

Numerical designation	Design	Material	Inner diameter	Outer diameter	Width	Metric or inch value
524219	CT1	NBR	33.701			Inch
524220	CT1	NBR	35.000			Inch
524221	CT1	NBR	35.433			Inch
524222	CT1	NBR	35.512			Inch
524223	CT1	NBR	35.984			Inch
524224	CT1	NBR	35.984			Inch
524225	CT1	NBR	37.874			Inch
524226	CT1	NBR	37.992			Inch
524227	CT1	NBR	40.984			Inch
524228	CT1	NBR	41.496			Inch
524229	CT1	NBR	44.016			Inch
524230	CT1	NBR	47.480			Inch
524231	CT1	NBR	48.228			Inch
524232	CT1	NBR	51.496			Inch
524294	CT1	NBR	32.252			Inch
524347	CT1	NBR	22.008			Inch
524364	CT1	NBR	23.504			Inch
524365	CT1	NBR	23.740			Inch
524367	CT1	NBR	32.480			Inch
524368	CT1	NBR	37.244			Inch
524369	CT1	NBR	43.504			Inch
524370	CT1	NBR	44.016			Inch
524371	CT1	NBR	48.858			Inch
524372	CT1	NBR	51.496			Inch
524373	CT1	NBR	70.984			Inch
524587	CT1	NBR	20.000			Inch
524591	CT1	NBR	25.984			Inch
524592	CT1	NBR	27.244			Inch
524599	CT1	NBR	21.496			Inch
524657	CT1	NBR	22.756			Inch
524768	CT1	NBR	37.126			Inch
524815	CT1	NBR	16.732			Inch
524853	CT1	NBR	29.370			Inch
524909	CT1	NBR	43.374			Inch
524928	CT1	NBR	11.024			Inch
524940	CT1	NBR	29.016			Inch
524973	CT1	NBR	29.752			Inch
525031	CT1	NBR	23.426			Inch
525032	CT1	NBR	28.819			Inch
525033	CT1	NBR	30.079			Inch
525034	CT1	NBR	32.205			Inch
525035	CT1	NBR	40.000			Inch
525036	CT1	NBR	41.142			Inch
525091	CT1	NBR	47.480			Inch
525092	CT1	NBR	75.748			Inch
525212	CT1	NBR	30.984			Inch
525320	CT1	NBR	37.008			Inch
525426	CT1	NBR	40.236			Inch
525582	CT1	NBR	12.008			Inch
525627	CT1	NBR	23.386			Inch
525633	CT1	NBR	40.866			Inch
525637	CT1	NBR	23.752			Inch
525708	CT1	NBR	18.504			Inch
525737	CT1	NBR	17.500			Inch
525953	CT1	NBR	50.630			Inch
526021	CT1	NBR	47.480			Inch
526192	CT1	NBR	18.504			Inch
526246	CT1	NBR	37.008			Inch
526582	CT1	NBR	37.480			Inch
526715	CT1	NBR	31.732			Inch
526741	CT4	NBR	21.496			Inch
526806	CT1	NBR	39.488			Inch
526807	CT1	NBR	55.000			Inch
526808	CT1	NBR	63.504			Inch
526809	CT1	NBR	70.000			Inch
526867	CT1	NBR	33.071			Inch
527211	CT1	NBR	47.000			Inch
527232	CT1	NBR	27.992			Inch
527474	CT1	NBR	41.496			Inch
527806	CT1	NBR	10.000			Inch
527819	CT1	NBR	9.000			Inch
527820	CT1	NBR	8.252			Inch
527903	CT1	NBR	40.000			Inch

Numerical designation	Design	Material	Inner diameter	Outer diameter	Width	Metric or inch value
528002	CT4	NBR	44.016			Inch
528070	CT4	NBR	17.689			Inch
528210	CT1	NBR	31.496			Inch
528267	CT4	NBR	23.752			Inch
528268	CT4	NBR	27.756			Inch
528269	CT4	NBR	29.016			Inch
528270	CT4	NBR	29.370			Inch
528271	CT4	NBR	41.968			Inch
528272	CT4	NBR	41.890			Inch
528273	CT4	NBR	44.016			Inch
528415	CT1	NBR	44.016			Inch
528416	CT1	NBR	35.984			Inch
528525	CT1	NBR	57.008			Inch
528526	CT1	NBR	52.992			Inch
528532	CT1	NBR	40.512			Inch
528535	CT1	NBR	17.008			Inch
528631	CT1	NBR	9.016			Inch
528651	CT4	NBR	23.740			Inch
528927	CT1	NBR	52.008			Inch
528975	CT1	NBR	67.756			Inch
529086	CT1	NBR	46.496			Inch
529129	CT1	NBR	50.000			Inch
529130	CT1	NBR	51.260			Inch
529276	CT4	NBR	24.252			Inch
529379	CT1	NBR	39.882			Inch
529452	CT1	NBR	39.488			Inch
529489	CT1	NBR	6.626			Inch
529490	CT1	NBR	8.622			Inch
529517	CT1	NBR	77.480			Inch
530396	CT4	NBR	40.079			Inch
530448	CT1	NBR	41.378			Inch
530466	CT1	NBR	36.000			Inch
530484	HM21	NBR	1.000	1.781	0.250	Inch
530606	CT1	NBR	47.500			Inch
530661	CT1	NBR	51.496			Inch
530733	CT1	NBR	14.000			Inch
531456	CT1	NBR	72.992			Inch
531635	CT1	NBR	8.937			Inch
532866	CRW1	ACM	1.063	1.512	0.256	Inch
538266	X15	NBR	1.000	2.356	0.270	Inch
541405	CRW1	NBR	8.250	9.500	0.578	Inch
541974	CRWH1	NBR	4.375	6.063	0.500	Inch
546751	HM14	FKM	2.750	3.500	0.250	Inch
546770	HM14	FKM	3.500	4.125	0.250	Inch
550085	CRSA1	NBR	2.063	2.875	0.375	Inch
550154	CRWA1	NBR	1.750	2.441	0.313	Inch
592934	CT4	NBR	16.260			Inch
593037	CT1	NBR	14.000			Inch
593171	CT1	NBR	14.961			Inch
593180	CT1	NBR	44.016			Inch
593285	CT1	NBR	36.575			Inch
593604	CT4	NBR	26.929			Inch
593606	CT1	NBR	36.000			Inch
593629	CT1	NBR	11.748			Inch
593637	CT1	NBR	7.284			Inch
593949	CT1	NBR	32.374			Inch
594025	CT1	NBR	15.000			Inch
594082	CT1	NBR	163.071			Inch
594083	CT1	NBR	102.992			Inch
594110	CT1	NBR	13.811			Inch
594163	CT4	NBR	58.606			Inch
594181	CT1	NBR	19.488			Inch
594202	CT4	NBR	36.575			Inch
594241	CT1	NBR	20.984			Inch
594334	CT1	NBR	6.614			Inch
594369	CT1	NBR	10.748			Inch
594431	CT1	NBR	23.622			Inch
594494	CT4	NBR	42.004			Inch
594784	CT4	NBR	25.787			Inch
594785	CT1	NBR	32.480			Inch
594954	CT1	NBR	15.236			Inch
595110	CT1	NBR	16.142			Inch
806715	HDDF	Steel	374,65	424,05		Metric
807115	HDDF	Steel	374,65	424,05		Metric
807149	HDDF	Steel	736,60	812,80		Metric
807199	HDDF	Steel	606,43	682,63		Metric

Product index

skf.com | skf.com/seals

PUB SE/P1 18729 EN · November 2019

This publication supersedes publication 10919.

Certain image(s) used under license from Shutterstock.com.